MICHIGAN DEPARTMENT OF ENVIRONMENTAL QUALITY – REMEDIATION AND REDEVELOPMENT DIVISION
PO BOX 30426, LANSING, MI 48909-7926, Phone 517-284-5087, Fax 517-241-9581

# LEAKING UNDERGROUND STORAGE TANK FINAL ASSESSMENT REPORT COVER SHEET

☒NEW or ☐REVISED PER DEQ AUDIT

INSTRUCTIONS: COMPLETION OF THIS REPORT WITH ALL APPLICABLE INFORMATION IS MANDATORY pursuant to Part 213, Section 324.21311a of the Leaking Underground Storage Tanks, of the Natural Resources and Environmental Protection Act, 1994 PA 451, as amended. **Check one of the boxes above to indicate whether this is a new or revised submittal.** Please provide the completed Final Assessment Report with the associated Table of Contents, Form EQP4007, within 365-days of discovery of a release to the appropriate RRD District Office.

| | | | |
|---|---|---|---|
| SITE NAME: Beacon & Bridge Market #8 | | FACILITY ID NUMBER: 00002778 | |
| STREET ADDRESS: 110 East Broad Street | | | |
| CITY: Linden | ZIP: 48451 | COUNTY: Genesee | |
| DATE(S) RELEASE(S) DISCOVERED: November 14, 2014 | CONFIRMED RELEASE NUMBER(S): C-0162-14 | | |
| O/O NAME: Quick-Sav Food Stores Ltd | O/O EMAIL ADDRESS: bcarpentier@quicksav.com | | |
| O/O STREET ADDRESS: 6285 Taylor Road | CITY: Flint | STATE: MI | ZIP: 48507 |
| CONTACT PERSON: Robert Carpentier | PHONE: 810.835.4341 | FAX: 810.835.4330 | |

**Permission is given for the Department of Environmental Quality to contact the Qualified Consultant:** ☒YES ☐NO

**FINAL ASSESSMENT REPORT INFORMATION: Answer All Questions (DO NOT LEAVE BLANKS)**

1. Site Classification (1-4): 2 Previous Site Classification (1-4): 1 Type of RBCA Evaluation: ☒ Tier I ☐ Tier II ☐ Tier III

2. Substance(s) released: ☒ Gasoline ☐ Diesel ☐ Ethanol: E-10 ☐ E-85 ☐ ☐ Other:

3. Has contamination migrated off-site above Tier 1 Residential RBSLs? ☒YES ☐NO
If YES, have off-site impacted parties been notified per Section 21309a(3) of Part 213? ☒YES ☐NO

4. Predominant groundwater flow direction: Westerly Depth to groundwater: ~9.0-10.0'

5. Is mobile NAPL present: Currently? ☒YES ☐NO Previously? ☒YES ☐NO
If present, was it recovered? ☒YES ☐NO If recoverable, total gallons recovered since last reported: 1.8 to date: 2.1

6. Is migrating NAPL present: ☐YES ☒NO If yes, are actions being taken to stop the NAPL migration? ☐YES ☐NO

7. Since Last Report: cubic yards of soil remediated: 0 gallons of groundwater remediated: 15.5
Totals to date: cubic yards of soil remediated: 0 gallons of groundwater remediated: 17.3

8. Have toxic or explosive vapors been identified in any confined spaces (basement, sewer, etc.)? ☐YES ☒NO None have been confirmed to be associated with the subject site

9. Drinking water supply affected? Currently: ☐YES ☒NO Previously: ☐YES ☒NO
Indicate type and # of wells affected: ☐ Private # ☐ Public Type II/III # ☐ Municipal #

10. Has the release affected surface water or wetlands? ☐YES ☒NO

11. Estimated distance and direction from point of release to nearest: Private well: 740 feet NW Municipal well: 0.25 mile NW
Surface water/wetland: 425 feet north Is site within a wellhead protection zone? ☐YES ☒NO

12. Does the report include a request for: In –Situ injection? ☒YES ☐NO DEQ approval for GSI compliance? ☐YES ☒NO
Groundwater not in an aquifer determination? ☐YES ☒NO Institutional controls regarding off-site migration? ☐YES ☒NO

13. What type of corrective action is proposed for each contaminated media? (i.e., Air Sparge/Soil Vapor Extraction; Monitored Natural Attenuation; Multi-phase Extraction; Excavation; Institutional Controls; etc.): LNAPL Sorption and Enhanced Bioremediation

MICHIGAN DEPARTMENT OF ENVIRONMENTAL QUALITY – REMEDIATION AND REDEVELOPMENT DIVISION
PO BOX 30426, LANSING, MI 48909-7926, Phone 517-284-5087, Fax 517-241-9581

# LEAKING UNDERGROUND STORAGE TANK FINAL ASSESSMENT REPORT COVER SHEET

(Continued)

This Final Assessment Report (FAR), which was completed in accordance with Part 213, Leaking Underground Storage Tanks, of the Natural Resources and Environmental Protection Act, 1994 PA451, as amended, is submitted by:

| SIGNATURE OF OWNER/OPERATOR (O/O) | | |
|---|---|---|
| Robert B Carpentier | Robert Carpentier | 2/11/16 |
| O/O or AUTHORIZED REPRESENTATIVE SIGNATURE | PRINT NAME | DATE |

| SIGNATURE OF QUALIFIED UST CONSULTANT (QC) | | |
|---|---|---|
| Christie L Santiago | Christie L. Santiago | 2/11/16 |
| QC SIGNATURE* | PRINT NAME | DATE |

*** By signing this form I certify that I meet the qualified underground storage tank consultant requirements identified in section 324.21325 of Part 213, Leaking Underground Storage Tanks, of the Natural Resources and Environmental Protection Act, 1994 PA 451, as amended.**

| PM Environmental, Inc. | 4080 West Eleven Mile Road, Berkley, Michigan 48072 | |
|---|---|---|
| QC COMPANY NAME | QC ADDRESS, CITY, STATE, ZIP | |
| 248.336.9988 | 877.884.6775 | santiago@pmenv.com |
| QC PHONE | QC FAX NUMBER | QC Email ADDRESS |

PM ENVIRONMENTAL
Risk Well Managed

Detroit
607 Shelby,
Suite 650
Detroit, MI 48226
f: 877.884.6775
t: 248.414.1416

Berkley
4080 W. 11 Mile Road
Berkley, MI 48072
f: 877.884.6775
t: 248.336.9988

Lansing
3340 Ranger Road
Lansing, MI 48906
f: 877.884.6775
t: 517.321.3331

Grand Rapids
560 5th Street NW,
Suite 301
Grand Rapids, MI 49504
f: 877.884.6775
t: 616.285.8857

February 2016

Ms. Marjorie Frisch
Michigan Department of Environmental Quality
Lansing District Office
525 West Allegan
Constitution Hall, 1S
P.O. Box 30242
Lansing, Michigan 48909-7742

**Re: Final Assessment Report for the Beacon & Bridge Market #8**
**Located at 110 East Broad Street, Linden, Michigan**
**Facility ID 00002778, Release ID C-0162-14**
**PM Environmental, Inc. Project No. 01-4892-0-002**

Dear Ms. Frisch:

PM Environmental, Inc. (PM) has completed this Final Assessment Report (FAR) for the Beacon & Bridge Market #8 located at 110 East Broad Street, Linden, Michigan (Site). The Site is listed with the Michigan Department of Environmental Quality (MDEQ) as Facility ID 00002778 with a Leaking Underground Storage Tank (LUST) open release (C-0162-14) discovered November 14, 2014. The attached FAR is a summary of the field investigative techniques; the results of the site and release assessment activities; the evaluation of applicable exposure pathways using the MDEQ Risk Based Corrective Action (RBCA) process, the evaluation of multiple remedial alternatives; and a corrective action plan (CAP) to address soil and groundwater contamination resulting from release C-0162-14. The FAR was completed pursuant to the Part 213, LUST, of the Michigan Natural Resources and Environmental Protection Act (NREPA), Public Act 451 of 1994, as amended (Part 213).

If you have any question or concerns, please feel free to contact our office at (800) 313-2966.

Sincerely,
**PM Environmental, Inc.**

**REPORT PREPARED BY:**

Christie L. Santiago

Christie L. Santiago, Q.C.
Senior Engineer

**REPORT REVIEWED BY:**

J. Adam Patton, CHMM, Q.C.
Manager of Site Investigation Services

Enclosure

## EXECUTIVE SUMMARY

PM Environmental, Inc. (PM) completed this Final Assessment Report (FAR) for the Beacon & Bridge #8 property located at 110 East Broad Street, in Linden, Michigan (hereafter referred to as the "Site"). The site is owned by Rare Family Partnership, doing business as Beacon & Bridge Market #8, located at 6285 Taylor Drive, in Flint, Michigan 48507.

This FAR was prepared pursuant to the Part 213 Leaking Underground Storage Tank (LUST) regulations of the Michigan Natural Resources and Environmental Protection Act (NREPA), Public Act 451 of 1994, as amended (Part 213), for the open LUST release C-0162-14, reported to the Michigan Department of Environmental Quality (MDEQ) on November 14, 2014. The release was confirmed based upon analytical results forwarded to Beacon & Bridge on November 14, 2014, from the Michigan Department of Environmental Quality (MDEQ) site investigation activities completed in the vicinity of the Site during July and August 2014, indicating a release may have occurred at the Site. The purpose of this FAR is to provide the results of site assessment activities; compare and evaluate applicable exposure pathways using the MDEQ Risk Based Corrective Action (RBCA) Process; evaluate remedial alternatives; and develop a corrective action plan (CAP) to address soil, groundwater, and vapor contamination resulting from release C-0162-14.

The Site is listed on the MDEQ LUST list for one release (C-0162-14) reported to the MDEQ on November 14, 2014. The release was confirmed based upon analytical results forwarded to Beacon & Bridge on November 14, 2014, from the MDEQ relative to site investigation activities completed in the vicinity of the Site during July and August 2014, indicating a release may have occurred at the Site.

An Initial Assessment Report (IAR) for release C-0162-14 was prepared by PM and submitted to the MDEQ on May 13, 2015. The IAR included information detailing how the release was discovered, initial site assessment and response activities, identified acute hazards, and evaluated applicable exposure pathways.

Based on review of the available information, there are three primary and separate gasoline VOC release sites in the study area, with associated groundwater plumes: the Marathon Station located at 120 West Broad Street, the Beacon & Bridge #8 LUST site located at 110 East Broad Street, and at the vacant property area associated with 122 North Bridge Street property. A fourth release area is also indicated at Hamrick/North Bridge Streets.

Soil contamination resulting from confirmed release C-0162-14 exists at the Site and surrounding area at concentrations that exceed the MDEQ Part 213 Tier 1 Risk Based Screening Levels (RBSLs) for Residential and Nonresidential Drinking Water Protection (DWP), Groundwater Surface Water Interface Protection (GSIP), Soil Volatilization to Indoor Air Inhalation (SVII), and Ambient Air Infinite Source Volatile Soil Inhalation (VSI), the Residential and Nonresidential Vapor Intrusion Screening Levels (VISLs), and the MDEQ Light Non-aqueous Phase Liquid (LNAPL) screening levels. The vertical extent of soil impact is defined by the water table and the confining clay unit (Figures 8A through 10A). The horizontal extent of soil impact is defined to the east, south, and west below the DWP and GSIP RBSLs or laboratory method detection levels (MDLs) (Figure 3A and Table 1). The soil impact is defined to the north by the North Bridge Street plume (Figure 3B and Table 1).

Groundwater contamination resulting from confirmed release C-0162-14 exists at the Site at concentrations that exceed the MDEQ Part 213 Tier 1 RBSLs for Residential and Nonresidential Drinking Water (DW), and Groundwater Surface Water Interface (GSI) RBSLs. Concentrations are also present at MW-1, MW-2, MW-3, and MW-11 above the Residential Groundwater Volatilization to Indoor Air Inhalation (GVII) RBSLs. Based on the shallow groundwater encountered (i.e. less than 10.0 feet below ground surface (bgs)) at MW-5, MW-12, MW-13, MW-14, MW-16, MW-19, and MW-20, groundwater analytical results were also compared to the Residential and Nonresidential VISLs. Measurable LNAPL was identified in permanent monitoring wells MW-1, MW-2, MW-3, and MW-12, at thicknesses ranging from 0.01-feet to 0.74-feet. The horizontal extent of groundwater impact is defined below the DW and GSI RBSLs or laboratory MDLs to the east (MW-6, MW-8, and MW-9), to the south (MW-6 and TMW-18), and west (MW-14, MW-17, and MW-18) (Figure 4A and Table 2). The groundwater impact is defined to the north by the North Bridge Street plume (Figure 4B and Table 2). The vertical extent of groundwater impact is defined by the lower clay unit (Figures 7 through 9).

Soil vapor testing was conducted to evaluate the Vapor Intrusion Pathway. The results of the soil vapor sampling conducted indicate the highest VOC concentratiosn are centered in the North Broad Street/North Bridge Street intersection (SB-7, SG-8, SB-9, SG-10, SG-11, and SG-12, which is consistent with the mobile LNAPL reported in MW-1, MW-2, MW-3, and MW-12 (Figure 5). The extent of the soil vapor sampling is defined to the east (SG-3, SG-5, SG-6, and SG-18), south (SG-3, SG-5, and SG-4), and west by SG-13, SG-14, SG-15, and SG-16). The soil vapor plume is defined to the north by the North Bridge Street vapor plume, which is generally characterized by the higher concentration VOCs including benzene, ethylbenzene, xylenes and cyclohexane (Table 5 and Figure 5).

Mobile LNAPL resulting from the confirmed release C-0162-14 exists at the Site in the general vicinity of the UST basin where the release occurred and down-gradient. The mobile LNAPL is delineated horizontally in all directions and vertically to a depth of approximately13.0 feet bgs. Groundwater monitoring events conducted between December 2014 and January 2016 demonstrate that a general trend is observed as groundwater lowers to approximately 10.0 feet bgs, at which point higher apparent LNAPL thickness is present.

In accordance with MDEQ Policy and Procedure #RRD-21, Leaking Underground Storage Tank Site Classification System dated October 11, 2013, the Site is classified as a Class 2 LUST site because of the presence of mobile LNAPL (but not migrating LNAPL) at the Site.

A Tier 1 Risk-Based Corrective Action (RBCA) Comparison and Exposure Pathway Characterization was completed for the Site. There are no acute hazards associated with the confirmed gasoline release. A feasibility study was completed to evaluate three corrective actions to address contamination resultant from the gasoline release. The most feasible and economic corrective action for the Site to eliminate the potential exposure associated with the drinking water, groundwater surface water interface, groundwater volatilization to indoor air inhalation, and LNAPL exposure pathways includes LNAPL Sorption and Enhanced Bioremediation with follow-up soil and groundwater monitoring, and institutional controls (if necessary).

This report has been reviewed for its completeness and accuracy. Please feel free to contact our office at (800) 485-0090 to discuss this report.

**REPORT PREPARED BY:**

Christie L. Santiago, Q.C.
Senior Engineer

**REPORT REVIEWED BY:**

J. Adam Patton, C.H.M.M., Q.C.
Manager of Site Investigation Services

## TABLE OF CONTENTS

1.0 SITE ASSESSMENT ..... 1
1.1 Introduction ..... 1
1.2 Site Assessment Goals ..... 2
1.3 Site Location ..... 3
1.4 Regional Topography, Geology, and Hydrogeology ..... 3
1.4.1 Regional Groundwater Flow Conditions ..... 4
1.5 General Land Use ..... 4
1.6 Site and Release History ..... 4
1.7 Site Assessment Activities ..... 7
1.7.1 Soil Boring Advancement and Soil Sampling ..... 14
1.7.2 Monitoring Well Installation & Groundwater Sampling ..... 14
1.7.3 Soil Vapor Monitoring Points ..... 15
1.7.4 Quality Assurance and Quality Control ..... 15
1.7.5 Surveying ..... 16
1.7.6 Groundwater Elevation Measurements ..... 16
1.8 Soil Conditions and Characteristics ..... 17
1.8.1 Geology ..... 17
1.8.2 Soil Contamination ..... 17
1.8.3 Soil Contamination Not Related to the Release and Source ..... 19
1.9 Groundwater Conditions and Characteristics ..... 20
1.9.1 Hydrogeology ..... 20
1.9.2 Regional Groundwater Flow Conditions ..... 21
1.9.3 Estimated Hydraulic Conductivity, Porosity, & Groundwater Velocity ..... 21
1.9.4 Groundwater Contamination ..... 21
1.9.5 Groundwater Contamination Not Related to Release or Source ..... 23
1.10 Soil Vapor Conditions and Characteristics ..... 25
1.10.1 Soil Vapor Contamination ..... 25
1.11 Conditions and Characteristics in Other Environmental Media ..... 27
2.0 TIER 1 RISK-BASED CORRECTIVE ACTION (RBCA) COMPARISON ..... 27
2.1 Exposure Pathway Characterization ..... 27
2.2 Site Classification ..... 30
3.0 TIER 2 RBCA EVALUATION ..... 31
4.0 TIER 3 RBCA EVALUATION ..... 31
5.0 CONCEPTUAL SITE MODEL (CSM) / LNAPL CONCEPTUAL SITE MODEL (LCSM) ..... 31
6.0 FEASIBILITY STUDY ..... 34
6.1 Cleanup Alternatives ..... 34
6.1.1 LNAPL Sorption and Enhanced Bioremediation ..... 37
6.1.2 DPE Remediation System ..... 40
6.1.3 Self-sustaining Treatment for Active Remediation (STAR) ..... 42
6.2 Cost Estimates for Remedial Alternatives ..... 44
7.0 CORRECTIVE ACTION PLAN ..... 48
7.1 Description of Corrective Action ..... 48
7.1.1 Cleanup Goals ..... 48
7.1.2 Contingency Plan ..... 49
7.2 Pilot Study ..... 50
7.3 Pilot Study Performance Monitoring ..... 51
7.4 Full Scale Application ..... 51

7.5 Full Scale Performance/Verification Monitoring ..... 52
7.5.1 Verification of Soil Remediation Plan ..... 52
7.5.2 Groundwater Monitoring Plan ..... 53
7.5.3 Groundwater Monitoring Frequency ..... 53
7.5.4 Field Groundwater Sampling Procedures ..... 53
7.5.5 Soil Gas Monitoring Plan ..... 55
7.5.6 Soil Gas Monitoring Frequency ..... 56
7.8 Schedule for Implementation of the Corrective Action ..... 58
7.9 Restrictions and Notices ..... 59
7.10 Permits ..... 62
7.11 Financial Assurance Mechanism ..... 62
7.12 Corrective Action Discharges ..... 62

**TABLES**

Table 1: Summary of Soil Analytical Results – Gasoline Volatile Organic Compounds (VOCs)
Table 2: Summary of Groundwater Analytical Results – Gasoline Volatile Organic Compounds (VOCs)
Table 3: Summary of Soil Vapor Analytical Results
Table 4: Summary of Groundwater Potentiometric Surface Data
Table 5: Summary of Soil Analytical Results – Gasoline VOCs (BTEX only) & Gasoline Range Organics (GRO)
Table 6: Summary of Groundwater Analytical Results and Chemical Signature – Listed VOCs (2012-2016)

**FIGURES**

Figure 1: Property Vicinity Map
Figure 2: Generalized Diagram of the Subject Property and Adjoining Properties
Figure 3(A-B): Soil Boring/ Monitoring Well Location Map with Soil Analytical Results
Figure 4(A-B): Soil Boring/Monitoring Well Location Map with Groundwater Analytical Results
Figure 5: Soil Vapor Monitoring Point Locations with Soil Gas Analytical Results
Figure 6: LNAPL Source Areas
Figure 7(A-B): Potentiometric Surface Maps
Figure 8 (A-B): Conceptual Geologic Cross Section with Analytical Results A-A'
Figure 9 (A-B): Conceptual Geologic Cross Section with Analytical Results B-B'
Figure (10 A-B): Conceptual Geologic Cross Section with Analytical Results C-C'
Figure 11: Lower Clay Contour Map
Figure 12: Groundwater Total Listed VOC Contour Map
Figure 13: Soil Boring/Monitoring Well/Soil Gas Sample Location Map with Location of Pilot Study Media Injection Points

## APPENDICES

Appendix A: Soil Boring Logs
Appendix B: Laboratory Analytical Reports
Appendix C: Conceptual Site Model for Vapor Intrusion
Appendix D: Notices
Appendix E: Strata Storm Sewer Investigation Report
Appendix F: LNAPL Sorption Media Product Information

# 1.0 SITE ASSESSMENT

## 1.1 Introduction

PM Environmental, Inc. (PM), was retained to prepare a Final Assessment Report (FAR) for the Beacon & Bridge Market #8 located at 110 East Broad Street, in Linden, Michigan (hereafter referred to as the "Site"). The site is owned by Rare Family Partnership, located at 110 East Broad Street, in Linden, Michigan 48451.

This FAR was prepared pursuant to the Part 213 Leaking Underground Storage Tank (LUST) regulations of the Michigan Natural Resources and Environmental Protection Act (NREPA), Public Act 451 of 1994, as amended. The purpose of this report is to provide the results of site assessment activities, compare, and evaluate applicable exposure pathways using the Michigan Department of Environmental Quality (MDEQ) Risk Based Corrective Action (RBCA) Process. The RBCA evaluation was done to obtain the most cost effective means to abate all identified acute hazard(s) relative to release from the underground storage tank (UST) system at the Site following the Corrective Action Plan (CAP) activities. The RBCA evaluation was conducted according to procedures established in American Society for Testing and Materials (ASTM) E1739 to obtain the most technologically feasible and cost effective means to address the contamination resulting from the confirmed release from the UST system at the Site. Refer to Figure 1 for the location of the Site and Figure 2 for the subject property layout, location of the USTs and dispensers, and locations of adjoining properties. Previous reports submitted to the MDEQ include the May 13, 2015 Initial Assessment Report (IAR).

The Site consists of one parcel of land totaling 0.27 acres located at the southeast corner of East Broad Street and South Bridge Street in Linden, Michigan (Figures 1 and 2). The subject property is occupied by one approximate 2,240 square foot, single story, slab-on-grade convenience store building that is heated and cooled via packaged (i.e., roof mounted), natural-gas fired heating, ventilation, and air conditioning (HVAC) units that source return air from within the building.

The Site is listed on the MDEQ LUST list for one release (C-0162-14) reported to the MDEQ on November 14, 2014. The release was confirmed based upon analytical results forwarded to Beacon & Bridge on November 14, 2014, from the MDEQ relative to site investigation activities completed in the vicinity of the Site during July and August 2014, indicating that a release may have occurred at the Site.

The UST system was tested by Tankology, Inc. on November 20, 2014. All tanks, product lines, and leak detectors were tested, except the product line for the kerosene UST, which is a suction system. Results indicated that all tanks, lines, and leak detectors passed, except for the no lead UST closest to the fuel dispensers, which failed due to corrosion present on the riser at the top of the tank.

On April 27, 2015, the submersible riser, submersible pump and manhole were removed from the no-lead tank that previously failed the tightness test. Additionally the fuel dispensers were replaced. The two no lead tanks were manifolded together so both would function on the remaining submersible pump. Piping under the dispensers was also modified to accommodate the different location of piping to meters under the new fuel dispensers. One soil sample (MS-1) was collected during the repair activities adjacent to the corroded riser (Table 1 and Figure 3A). Soil analytical results identified concentrations of toluene, xylenes, 1,2,3-trimethylbenzene (TMB),

1,3,5-TMB, and naphthalene above laboratory method detection levels (MDLs), but below the applicable Residential and Nonresidential Drinking Water Protection (DWP) and Groundwater Surface Water Interface Protection (GSIP) Risk-Based Screening Levels (RBSLs). A concentration of 1,2,4-TMB was identified above the GSIP RSBLs; therefore, synthetic precipitate leachate procedure (SPLP) analysis was conducted to determine if the impact would leach above the Drinking Water (DW) or Groundwater Surface Water Interface (GSI) RBSLs. Results of the SPLP analysis indicate 1,2,4-TMB concentrations will not leach above the DW or GSI RBSLs (Table 2 and Figure 4A).

Site assessment and remedial activities were conducted on the Site and surrounding areas including within the right of ways of East and West Broad Streets and North and South Bridge Streets between December 2014 and January 2016 which consisted of the advancement of soil borings, installation of temporary/permanent monitoring wells and/or soil vapor points, collection of soil, groundwater, and soil vapor samples for laboratory analysis, and light non-aqueous phase liquid (LNAPL) recovery.

While mobile LNAPL and residual LNAPL saturation exists in soils at the Site, ambient air monitoring with a photoionization detector (PID) conducted during Site work activities during December 2014, September 2015, and January 2016, did not exceed safe work screening levels (outlined in a site-specific health and safety plan). A protective concrete or asphalt barrier exists at the ground surface above the LNAPL. Therefore, there are no known fire and explosion hazards due to released hazardous substances present at the Site.

Residual and mobile LNAPL remain present on the Site and within the South Bridge Street right of way. The LNAPL interim remedial actions conducted at the Site have included manual bailing of the LNAPL. Manual bailing of NAPL was conducted on December 24, 2014, April 27, 2015, September 18, 2015, October 5, 2015, January 15, 2016, and January 19, 2016. No interim remedial actions were conducted at the Site for contaminated soil.

In accordance with MDEQ Policy and Procedure #RRD-21, Leaking Underground Storage Tank Site Classification System dated October 11, 2013, the Site is classified as a Class 2 LUST site because of the presence of mobile LNAPL (but not migrating LNAPL) at the Site (Section 5.0).

A Tier 1 RBCA Comparison and Exposure Pathway Characterization was completed for the Site. There are no acute hazards associated with the confirmed gasoline release. A feasibility study was completed to evaluate three corrective actions to address contamination resultant from the gasoline release C-0162-14. The most feasible and economic corrective action for the Site to eliminate the potential exposure associated with the drinking water, soil and groundwater volatilization to indoor air inhalation, and LNAPL exposure pathways includes LNAPL Sorption and Enhanced Bioremediation with follow-up soil and groundwater monitoring, and institutional controls (if necessary).

### 1.2 Site Assessment Goals

The assessment goals established at the Site include identification and delineation of soil, groundwater, soil vapor, and LNAPL contamination resulting from release C-0162-14 to the most restrictive MDEQ Part 213 Tier 1 RBSLs.

The nature and extent of the soil, groundwater, LNAPL, and soil vapor contamination at and/or downgradient from the Site relative to the release from the gasoline UST system (C-0162-14) was delineated in accordance with Part 213 (Sections 1.8 to 1.11). A feasibility study (Section 6.0) was conducted to evaluate three different remediation options to determine the most technologically feasible and cost effective method for abatement of contamination. A CAP (Section 7.0) was developed to outline the tasks necessary to implement the most appropriate cleanup alternative identified in the feasibility study.

### 1.3 Site Location

The Site is an active gasoline dispensing station and convenience store located at 110 East Broad Street, Linden, Michigan. The Site is located in Township 5 North (T. 5N), Range 6 East (R. 6E), Section 20, Genesee County, Michigan. Refer to Figure 1, Site Location Map; and Figure 2, Generalized Diagram of the Subject Property and Surrounding Area.

### 1.4 Regional Topography, Geology, and Hydrogeology

A review of the 7.5 Minute, Linden, Michigan Quadrangle, Map (Figure 1) prepared by the United States Geologic Survey (USGS), 1983 indicates that the Site is approximately 880 feet elevation relative to the National Geodetic Vertical Datum, (NGVD) and slopes gently to the west. The immediate subject property area appears to be relatively flat.

According to the Quaternary Geology of Southern Michigan, Michigan, compiled in 1984 by W.R. Farrand and published by the Department of Geological Services of the University of Michigan in Ann Arbor, Michigan, the regional geology in the vicinity of the site consists of the following soil type:

- **Glacial outwash sand and gravel and postglacial alluvium**: pale brown to pale reddish brown, fine to coarse sand alternating with layers of small gravel to heavy cobbles, mixed lithology of sedimentary, igneous, and metamorphic rocks, well- to poorly-sorted, well-stratified, in places crossbedded. Thickness of this geology varies between 101 to 200 feet.

The nearest surface water body is the Shiawassee River, located approximately 425 feet north of the Site (Figure 1). The storm sewers in Linden are separate from the sanitary sewers and, therefore, are subject to storm water regulations regarding elimination of illicit discharges. Although recent Part 201 amendments (Section 20120e(6)) do not classify enclosed sewers or utility lines as GSI receptors, current MDEQ guidance continues to support that the storm sewers must be considered in compliance point determinations. The storm sewers adjacent to the Site are located at depths that are shallower (higher elevation) than the groundwater table; therefore, they do not represent a potential exposure pathway to GSI.

A water well search was conducted for the site and surrounding area using the MDEQ Water Well Viewer web site. Twenty-one water wells were identified within approximately 0.5 miles of the Site (IAR Appendix D). In general, at least 17 to 165 feet of clay overlies the sand, gravel, and/or sandstone water bearing units the wells were screened within. Water well uses documented on the logs include household, domestic, test well, and Type I Public. Review of MDEQ Water Well Viewer web site indicates the Site is not located within a wellhead protection zone.

### 1.4.1 Regional Groundwater Flow Conditions

The nearest surface water body is the Shiawassee River, located approximately 425 feet north of the Site (Figure 1). Based on review of the topographic features and expressions of the water table (i.e., rivers, streams, lakes, wetlands etc.), regional groundwater flow in the vicinity of the subject Site likely has a general western component.

## 1.5 General Land Use

The subject property consists of one parcel of land totaling 0.27 acres located at the southeast corner of East Broad Street and South Bridge Street in Linden, Michigan (Figures 1 and 2). The subject property is occupied by one approximate 2,240 square foot, single story, slab-on-grade convenience store building. The Site currently has four USTs in service. Three 10,000 gallon gasoline USTs are located approximately 12 feet north of the Site building and provide gasoline to the two fuel dispensers located northeast of the Site gasoline UST basin (Figure 2). A 2,000 gallon kerosene UST is present west of the building with a single fuel dispenser directly east of the UST.

The Site is located within a mixed Nonresidential (commercial) and Residential area bordered by East Broad Street to the north followed by a mixed commercial/retail development, and South Bridge Street to the west followed by a mixed commercial/retail development to the west. Commercial businesses are present directly east and south of the Site, with residential properties further south of the Site. Refer to Figure 2 for adjoining property uses.

The storm sewers are separate from the sanitary sewers (Figure 2), and are subject to storm water regulations regarding elimination of illicit discharges. The storm sewers in South Bridge Street, in the groundwater plume area, are located at depths ranging from 6.5 feet to 7.0 feet below ground surface (bgs) and are above the groundwater table that generally ranges between 9.5 and 11.2 feet bgs. The sanitary sewer utility line in the South Bridge Street right of way is approximately 13.0 to 15.0 feet bgs. Other utilities (water, gas, electric, etc.) are also shown on Figure 2.

## 1.6 Site and Release History

The Site is listed on the MDEQ LUST list for one release (C-0162-14). Confirmed release C-00162-14 was based on the identified soil and groundwater impact and the presence of 0.07 feet of LNAPL in the right of way adjacent to the subject Site, following site investigation activities completed by the MDEQ. A confirmed release was reported to the MDEQ by PM on November 14, 2014, following review of analytical results provided in Environmental Consulting & Technology, Inc.'s (ECT's) Technical Memorandum Conceptual Site Model and Preliminary Pathway Evaluation (hereafter referred to as the Technical Memorandum), dated November 2014, which is available from MDEQ files.

The UST system was tested by Tankology, Inc. on November 20, 2014 (Appendix A of IAR). All tanks, product lines, and leak detectors were tested, except for the product line for the kerosene UST, which is a suction system. Results indicated that all tanks, lines, and leak detectors passed, except the no lead UST closest to the fuel dispensers, which failed due to corrosion present on the riser at the top of the tank.

On April 27, 2015, the submersible riser, submersible pump and manhole were removed from the no-lead tank that previously failed the tightness test. Additionally the fuel dispensers were replaced. The two no lead tanks were manifolded together so both would function on the remaining submersible pump. Piping under the dispensers was also modified to accommodate the different location of piping to meters under the new fuel dispensers. One soil sample (MS-1) was collected during the repair activities adjacent to the corroded riser (Table 1 and Figure 3A). Soil analytical results identified concentrations of toluene, xylenes, 1,2,3-TMB, 1,3,5-TMB, and naphthalene above laboratory MDLs, but below the applicable Residential and Nonresidential DWP and GSIP RBSLs. A concentration of 1,2,4-TMB was identified above the GSIP RSBLs; therefore, SPLP analysis was conducted to determine if the impact would leach above the DW or GSI RBSLs. Results of the SPLP analysis indicate 1,2,4-TMB concentrations will not leach above the DW or GSI RBSLs (Table 2 and Figure 4A).

PM completed site investigations, monitoring, and remedial activities at the Site and in the adjoining road right of ways between November 2014 and January 2016 to assess the soil (Table 1 and Figures 3A and 3B), groundwater (Table 2 and Figures 4A and 4B), soil vapor (Table 3 and Figure 5), and mobile LNAPL (Table 4 and Figure 4A) conditions, subsequent to the release. The scope of the site investigations and remedial activities included the advancement of 23 soil borings (SB-1 through SB-23), the installation of 19 permanent groundwater monitoring wells (MW-1 through MW-14 and MW-16 through MW-20), one temporary monitoring well (TMW-18), four sub-slab soil gas points (SG-1, SG-2, SG-20 and SG-21), and 17 soil vapor monitoring points (SG-3 through SG-19) to assess site conditions and delineate the extent of soil, groundwater, soil vapor, and LNAPL impact. LNAPL monitoring events (Table 4) were conducted between December 2014 and January 2016. Mobile LNAPL was observed in monitoring wells MW-1, MW-2, MW-3, and MW-12 with thicknesses ranging between 0.01 and 0.74-feet. Manual bailing events were conducted as interim response activities.

The MDEQ completed site investigation activities in the study area during November 2015 to evaluate potential offsite sources. The scope of the MDEQ investigation consisted of the advancement of 21 soil borings (GP-15-1 through GP-15-20, and HA-15-1), the installation of six temporary monitoring wells (GP-15-13, GP-15-14, GP-15-17, GP-15-19, GP-15-20, and HA-15-1), and the installation of two permanent monitoring wells (GP-15-2/MW-1 and GP-15-3/MW-2) (Tables 1 and 2 and Figures 3B and 4B).

The study area geology generally consists of up to 19 feet of sand/gravel overlying clay to the maximum explored depth of 20 feet bgs. The shallow sand/gravel pinches out to the north (e.g., Hamrick Street) prior to encountering the Shiawassee River (Figure 1) that flows east to west, approximately 0.1 miles to the north of the subject property (Appendix A). Groundwater is encountered in the shallow sand/gravel between 6 and 12 feet bgs (Table 4). The Shiawassee River is impounded by the Main Street dam located to the northeast of the subject property. This impoundment results in losing stream conditions, where river water infiltrates (i.e., is lost) into the bordering subsurface facilitating a general western regional groundwater flow component around the dam structure. This is evident by the western and southern groundwater flow components observed in the study area as inferred by the October 5, 2015 and the January 19, 2016 potentiometric surface contour maps presented in Figures 7A and 7B. Locally higher groundwater elevations are observed in the northern and southern portions of the study area, with a general groundwater low along Broad Street.

Based on review of the available information, there are three primary and separate gasoline volatile organic compound (VOC) release sites in the study area, with associated groundwater plumes: the Marathon Station located at 120 West Broad Street, the Beacon & Bridge #8 LUST site located at 110 East Broad Street, and at the vacant property area associated with 122 North Bridge Street property. A fourth release area is also indicated at Hamrick/North Bridge Streets.

Soil contamination resulting from confirmed release C-0162-14 exists at the Site and surrounding area at concentrations that exceed the MDEQ Part 213 Tier 1 RBSLs for Residential and Nonresidential DWP, GSIP, and Ambient Air Infinite Source Volatile Soil Inhalation (VSI), the Residential and Nonresidential Vapor Intrusion Screening Levels (VISLs), and the MDEQ LNAPL screening levels. The vertical extent of soil impact is defined by the water table and the confining clay unit. The horizontal extent of soil impact is defined below the DWP and GSIP RBSLs or laboratory MDLs to the east (GP-13, SB-9, SB-11, and SB-12), south (GP-16, SB-9, SB-10, and SB-18), and west (SB-17, SB-19, SB-20, SB-21, and SG-14) (Figure 3A and Table 1). The soil impact is defined to the north by the North Bridge Street plume (Figure 3B and Table 1). The vertical extent of soil impact is defined by the groundwater table and in the lower clay unit (SB-1 through SB-7, SB-14, SB-15, and GP-15) (Figures 8A through 10A).

Groundwater contamination resulting from confirmed release C-0162-14 exists at the Site at concentrations that exceed the MDEQ Part 213 Tier 1 RBSLs for Residential and Nonresidential DW and GSI RBSLs. Concentrations are also present at MW-1, MW-2, MW-3, and MW-11 above the Residential Groundwater Volatilization to Indoor Air Inhalation (GVII) RBSLs. Based on the shallow groundwater encountered (i.e. less than 10.0 feet bgs) at MW-5, MW-12, MW-13, MW-14, MW-16, MW-19, and MW-20, groundwater analytical results were also compared to the Residential and Nonresidential VISLs. Measurable LNAPL was identified in permanent monitoring wells MW-1, MW-2, MW-3, and MW-12, at thicknesses ranging from 0.01-feet to 0.74-feet. The horizontal extent of groundwater impact is defined below the DW and GSI RBSLs or laboratory MDLs to the east (MW-6, MW-8, and MW-9), to the south (MW-6 and TMW-18), and west (MW-14, MW-17, and MW-18) (Figure 4A and Table 2). The groundwater impact is defined to the north by the North Bridge Street plume (Figure 4B and Table 2). The vertical extent of groundwater impact is defined by the lower clay unit (Figures 8B through 10B)

Soil vapor testing was conducted to evaluate the Vapor Intrusion Pathway. The results of the soil vapor sampling (Section 1.10.1) conducted indicate the highest VOC concentrations associated with confirmed release C-0162-14 are centered in the North Broad Street/North Bridge Street intersection (SB-7, SG-8, SB-9, SG-10, SG-11, and SG-12, which is consistent with the mobile LNAPL reported in MW-1, MW-2, MW-3, and MW-12 (Figure 5). The extent of the soil vapor concentrations exceeding VISLs is defined to the east (SG-3, SG-5, SG-6, and SG-18), south (SG-3, SG-5, and SG-4), and west by SG-13, SG-14, SG-15, and SG-16). The soil vapor plume is defined to the north by the North Bridge Street vapor plume (i.e. sourced from the 122 North Bridge Streetproperty north of the site (Section 1.8.3), which is generally characterized by the higher concentration VOCs including benzene, ethylbenzene, xylenes and cyclohexane (Table 5 and Figure 5).

Mobile LNAPL resulting from the confirmed release C-0162-14 exists at the Site in the general vicinity of the UST basin where the release occurred and down-gradient. The mobile LNAPL is delineated horizontally in all directions and vertically to a depth of approximately13.0 feet bgs. Groundwater monitoring events conducted between December 2014 and January 2016

demonstrate that the a general trend is observed as groundwater lowers to approximately 10.0 feet below ground surface, at which point higher apparent LNAPL thickness is present.

The Site currently has four USTs in service. Three 10,000 gallon gasoline USTs are located approximately 12 feet north of the Site building and provide gasoline to the two dispensers located northeast of the Site gasoline UST basin (Figure 2). A 2,000 gallon kerosene UST is present west of the building with a single fuel dispenser direct east of the UST.

UST information based on the MDEQ files and site information are summarized below:

**Underground Storage Tank Data**

| Tank ID | Installation Date | Tank Status | Capacity (in gallons) | Substance Stored |
|---|---|---|---|---|
| 1 | 5/1/1956 | Removed from Ground | 8,000 | Gasoline |
| 2 | 5/1/1956 | Removed from Ground | 4,000 | Gasoline |
| 3 | 5/1/1956 | Removed from Ground | 3,000 | Gasoline |
| 4 | 5/1/1956 | Removed from Ground | 6,000 | Gasoline |
| 5 | 1/1/1987 | Removed from Ground | 10,000 | Gasoline |
| 6 | 1/1/1987 | Currently in Use | 10,000 | Gasoline |
| 7 | 1/1/1987 | Currently in Use | 10,000 | Gasoline |
| 8 | 1/1/1987 | Currently in Use | 10,000 | Gasoline |
| 1-A | 1/1/1960 | Removed from Ground | 8,000 | Gasoline |
| 2-A | 1/1/1960 | Removed from Ground | 4,000 | Gasoline |
| 3-A | 1/1/1960 | Removed from Ground | 3,000 | Gasoline |
| 4-A | 1/1/1960 | Removed from Ground | 6,000 | Gasoline |
| 8-A | 1/1/1987 | Currently in Use | 2,000 | Kerosene |

### 1.7 Site Assessment Activities

The following sections (1.7.1 through 1.7.6) document the soil, groundwater, soil vapor, and LNAPL sampling activities that were conducted by PM relative to release C-0162-14.

Initial site assessment activities were conducted by PM between December 2014 and April 27, 2015. Additional site assessment activities were conducted between September 2015 and January 2016. The subsurface investigations were performed to investigate the soil profile, and determine both the nature and horizontal and vertical extent of soil, groundwater, LNAPL, and soil vapor contamination at levels above the MDEQ Part 213 Tier 1 RBSLs and/or screening levels.

PM completed site investigations, monitoring, and remedial activities at the Site and in the adjoining road right of ways between November 2014 and January 2016 to assess the soil (Figures 3A and 3B), groundwater (Figures 4A and 4B), soil vapor (Figure 5), and mobile LNAPL (Figure 4A) conditions, subsequent to the release. The scope of the site investigations and remedial activities included the advancement of 23 soil borings (SB-1 through SB-23), the installation of 19 permanent groundwater monitoring wells (MW-1 through MW-14 and MW-16 through MW-20), one temporary monitoring well (TMW-18), four sub-slab soil gas points (SG-1, SG-2, SG-20 and SG-21), and 17 soil vapor monitoring points (SG-3 through SG-19) to assess site conditions and delineate the extent of soil, groundwater, soil vapor, and LNAPL impact.

ECT was present during the December 2014, September 2015, and January 2016 investigations and collected split samples for soil and groundwater on behalf of the MDEQ. The results for the December 2014 and September 2015 are summarized on Tables 1 and 2 and Figures 3 and 4. MDEQ analytical results from January 2016 were not available prior to completion of this report.

Specifically, the site investigation activities were conducted in the following areas of the Site and surrounding area:

**Description of Soil Boring/Monitoring Well Locations**

| Location (Total Depth feet bgs) | Soil Sample Depth (feet bgs) | Analysis | Objectives | Soil and/or Groundwater Sample Selection (justification) | Monitoring Well Installed (Screened Interval feet bgs) |
|---|---|---|---|---|---|
| SB/MW-1 (20.0) | 9.0-10.0, 11.0-12.0, and 19.0-20.0 | Gasoline VOCs and GRO | Assess contaminant concentrations southwest of the gasoline UST basin | **Soil**: Sampled at the highest PID reading (1,875 ppm) above the water table, highest PID within the saturated zone (1,231 ppm), and from a deeper, unsaturated interval, for vertical definition<br><br>**Groundwater:** Sampled | MW-1 (9.0-14.0) |
| SB/MW-2 (20.0) | 9.0-10.0, 10.0-11, and 19.0-20.0 | Gasoline VOCs and GRO | Assess contaminant concentrations west of the UST basin | **Soil**: Sampled at the highest PID reading (1,923 ppm) above the water table, highest PID within the saturated zone (1,159 ppm), and from a deeper, unsaturated interval, for vertical definition<br><br>**Groundwater:** Sampled | MW-2 (9.14-14.14) |
| SB/MW-3 (20.0) | 9.0-10.0 and 10.0-11.0 | Gasoline VOCs and GRO | Assess contaminant concentrations north of the UST basin | **Soil**: Sampled at the highest PID reading (1,175ppm) above the water table, highest PID within the saturated zone (1,425ppm), and from a deeper, unsaturated interval, for vertical definition<br><br>**Groundwater:** Sampled | MW-3 (8.80-13.80) |
| SB/MW-4 (20.0) | 10.0-11 and 19.0-20.0 | Gasoline VOCs and GRO | Assess contaminant concentrations at the northeastern property boundary | **Soil**: Sampled at the highest PID reading (275 ppm) above the water table and the highest PID within the saturated zone (958 ppm)<br><br>**Groundwater:** Sampled | MW-4 (7.90-12.90) |

| Location (Total Depth feet bgs) | Soil Sample Depth (feet bgs) | Analysis | Objectives | Soil and/or Groundwater Sample Selection (justification) | Monitoring Well Installed (Screened Interval feet bgs) |
|---|---|---|---|---|---|
| SB/MW-5 (20.0) | 8.0-9.0 and 9.0-10.0 | Gasoline VOCs and GRO | Assess contaminant concentrations up-gradient of the UST system | **Soil**: Sampled at the highest PID reading (327.6 ppm) above the water table and the highest PID within the saturated zone (1,521 ppm)<br><br>**Groundwater:** Sampled | MW-5 (8.10-13.10) |
| SB-6 (20.0) | 9.0-10.0, 12.0-13.0, and 19.0-20.0 | Gasoline VOCs and GRO | Assess contaminant concentrations northeast of UST basin and directly north of fuel dispensers | **Soil**: Sampled at the highest PID reading (1,671 ppm) above the water table, highest PID within the saturated zone (861 ppm), and from a deeper, unsaturated interval, for vertical definition<br><br>**Groundwater:** Not Sampled | Not Applicable |
| SB-7 (20.0) | 10.0-11.0, 11.0-12.0, and 19.0-20.0 | Gasoline VOCs and GRO | Assess contaminant concentrations east of UST basin and directly south of fuel dispensers | **Soil**: Sampled at the highest PID reading (1,603 ppm) above the water table, highest PID within the saturated zone (1,480 ppm), and from a deeper, unsaturated interval, for vertical definition<br><br>**Groundwater:** Not Sampled | Not Applicable |
| SB-8 (20.0) | 9.0-10.0, 10.0-11, and 19.0-20.0 | Gasoline VOCs and GRO | Assess contaminant concentrations east of the fuel dispensers | **Soil**: Sampled at the highest PID reading (1,521 ppm) above the water table, highest PID within the saturated zone (1,024 ppm), and from a deeper, unsaturated interval, for vertical definition<br><br>**Groundwater:** Not Sampled | Not Applicable |
| SB-9/MW-6 (20.0) | 7.0-8.0 | Gasoline VOCs and GRO | Horizontally define the extent of impact to the southeast on east adjoining property | **Soil**: Due to lack of PID readings above 1 ppm, a sample was collected above the saturated zone **Groundwater:** Sampled | MW-6 (6.74-11.74) |

| Location (Total Depth feet bgs) | Soil Sample Depth (feet bgs) | Analysis | Objectives | Soil and/or Groundwater Sample Selection (justification) | Monitoring Well Installed (Screened Interval feet bgs) |
|---|---|---|---|---|---|
| SB-10/MW-7 (20.0) | 2.0-3.0 and 9.0-10.0 | Gasoline VOCs and GRO | Horizontally define the extent of impact south of the Site within the South Bridge Street right of way | **Soil**: Due to lack of PID readings above 1 ppm, a shallow sample was collected, and a sample was collected above the saturated zone **Groundwater:** Sampled | MW-7 (8.16-13.16) |
| SB-11/MW-8 (20.0) | 7.0-8.0 | Gasoline VOCs and GRO | Horizontally define the extent of impact east of the Site within the East Broad Street right of way | **Soil**: Due to lack of PID readings above 1 ppm, sample collected above the saturated zone **Groundwater:** Sampled | MW-8 (9.18-14.18) |
| SB-12/MW-9 (20.0) | 7.0-8.0 | Gasoline VOCs and GRO | Horizontally define the extent of impact east of the Site and assess potential offsite former UST basin | **Soil**: Due to lack of PID readings above 1 ppm, sample collected above the saturated zone **Groundwater:** Sampled | MW-9 (7.20-12.20) |
| SB-13/MW-10 (20.0) | 9.0-10.0, 15.0-16.0, and 19.0-20.0 | Gasoline VOCs and GRO | Horizontally define the LNAPL present in MW-3 to the north within the East Broad Street right of way | **Soil**: Sampled at the highest PID reading (1,311 ppm) above the water table, highest PID within the saturated zone (1,860 ppm), and from a deeper, unsaturated interval, for vertical definition **Groundwater:** Sampled | MW-10 (11.95-16.95) |
| SB-14/MW-11 (25.0) | 7.0-8.0, 9.0-10.0, and 14.0-15.0 | Gasoline VOCs and GRO | Horizontally define the LNAPL present in MW-3 to the west within the South Bridge Street right of way | **Soil**: Sampled at the highest PID reading (460 ppm) above the water table, highest PID reading within the saturated zone (3,691 ppm), and from a deeper, unsaturated interval, for vertical definition **Groundwater:** Sampled | MW-11 (7.83-12.83) |
| SB-15/MW-12 (20.0) | 2.0-3.0, 8.0-9.0, and 19.0-20.0 | Gasoline VOCs and GRO | Horizontally define the LNAPL present in MW-2 to the west within the South Bridge Street right of way | **Soil**: Sampled at the highest shallow PID reading (289 ppm), highest PID above the saturated zone (1,216 ppm), and from a deeper, unsaturated interval, for vertical definition **Groundwater:** Sampled | MW-12 (7.30-12.30) |

| Location (Total Depth feet bgs) | Soil Sample Depth (feet bgs) | Analysis | Objectives | Soil and/or Groundwater Sample Selection (justification) | Monitoring Well Installed (Screened Interval feet bgs) |
|---|---|---|---|---|---|
| SB-16/MW-13 (20.0) | 6.0-70 and 12.0-13.0 | Gasoline VOCs and GRO | Horizontally define the LNAPL present in MW-3 to the northwest within the North Bridge Street right of way | **Soil:** Sampled at the highest PID reading (2.7 ppm) above the water table **Groundwater:** Sampled | MW-13 (5.79-10.79) |
| SB-17/MW-14 (20.0) | 6.0-7.0 | Gasoline VOCs and GRO | Horizontally define the extent of impact present to the west within West Broad Street right of way | **Soil:** Due to lack of PID readings above 1 ppm, sample collected above the saturated zone **Groundwater:** Sampled | MW-14 (6.48-11.48) |
| SB/TMW-18 | 7.0-8.0 | Gasoline VOCs and GRO | Horizontally define the extent of impact present to the south within South Bridge Street right of way | **Soil:** Due to lack of PID readings above 1 ppm, sample collected above the saturated zone **Groundwater:** Sampled | TMW-18 (7.0-12.0) |
| SB-19/MW-16 (20.0) | 6.0-7.0 and 19.0-20.0 | Gasoline VOCs and GRO | Horizontally define the extent of impact present to the northwest within West Broad Street right of way | **Soil:** Due to lack of PID readings, sample collected above the saturated zone and deeper for vertical delineation **Groundwater:** Sampled | MW-16 (6.14-11.14) |
| SB-20/MW-17 (20.0) | 8.0-9.0 | Gasoline VOCs and GRO | Horizontally define the extent of impact present to the southwest within South Bridge Street right of way | **Soil:** Due to lack of PID readings, sample collected above the saturated zone **Groundwater:** Sampled | MW-17 (8.1-13.1) |
| SB-21/MW-18 (20.0) | 7.0-8.0 | Gasoline VOCs and GRO | Horizontally define the extent of impact west of SB-15/MW-12 | **Soil:** Due to lack of PID readings, sample collected above the saturated zone **Groundwater:** Sampled | MW-18 (7.37-12.37) |
| SB-22/MW-19 (20.0) | NA | Gasoline VOCs | Horizontally define the extent of groundwater impact to the northwest | **Soil:** Not sampled **Groundwater:** Sampled | MW-19 (3.38-8.38) |
| SB-23/MW-20 | NA | Gasoline VOCs | Horizontally define the extent of groundwater impact to the northeast within the East Broad Street right of way | **Soil:** Not sampled **Groundwater:** Not encountered | MW-20 (6.70-11.70) |

| Location (Total Depth feet bgs) | Soil Sample Depth (feet bgs) | Analysis | Objectives | Soil and/or Groundwater Sample Selection (justification) | Monitoring Well Installed (Screened Interval feet bgs) |
|---|---|---|---|---|---|
| **Soil Vapor Sampling** | | | | | |
| SG-1 | (Sub-Slab Soil Gas) 0.5 | TO-15 VOCs | Sub-slab vapor point installed in convenience store | **Soil:** Not Sampled **Groundwater:** Not Encountered **Soil gas**: Sampled | Sub-Slab |
| SG-2 | (Sub-Slab Soil Gas) 0.5 | TO-15 VOCs | Sub-slab vapor point installed in convenience store | **Soil:** Not Sampled **Groundwater:** Not Encountered **Soil gas**: Sampled | Sub-Slab |
| SG-3 (8.0) | (Soil Gas) 5.0-6.0 | TO-15 VOCs | Assess vapor conditions near onsite sanitary sewer connection | **Soil:** Not Sampled **Groundwater:** Not Encountered **Soil gas**: Sampled | 7.5-8.0 |
| SG-4 (7.0) | (Soil Gas) 5.0-6.0 | TO-15 VOCs | Horizontally delineate vapor impact to the south within the South Bridge Street right of way | **Soil:** Not Sampled **Groundwater:** Not Encountered **Soil gas**: Sampled | 6.0-7.0 |
| SG-5 (6.0) | (Soil Gas) 9.0-10.0 | TO-15 VOCs | Horizontally delineate vapor impact to the southeast | **Soil:** Not Sampled **Groundwater:** Not Encountered **Soil gas**: Sampled | 5.5-6.0 |
| SG-6 (6.0) | (Soil Gas) 5.0-6.0 | TO-15 VOCs | Horizontally delineate vapor impact to the east | **Soil:** Not Sampled **Groundwater:** Not Encountered **Soil gas**: Sampled | 5.5-6.0 |
| SG-7S and SG-7D | (Soil Gas) 5.5-.6.0 And 9.0-10.0 | TO-15 VOCs | Assess vapor conditions to the north within the East Broad Street right of way | **Soil:** Not Sampled **Groundwater:** Not Encountered **Soil gas**: Sampled | Shallow: 5.5-6.0 Deep: 9.0-10.0 |
| SG-8 (6.0) | (Soil Gas) 5.5-6.0 | TO-15 VOCs | Assess vapor conditions to the west within the South Bridge Street right of way | **Soil:** Not Sampled **Groundwater:** Not Encountered **Soil gas**: Sampled | 5.5-6.0 |
| SG-9 (6.0) | (Soil Gas) 5.5-6.0 | TO-15 VOCs | Assess vapor conditions to the west within the South Bridge Street right of way | **Soil:** Not Sampled **Groundwater:** Not Encountered **Soil gas**: Sampled | 5.5-6.0 |
| SG-10 (6.0) | (Soil Gas) 5.5-6.0 | TO-15 VOCs | Assess vapor conditions to the northwest within the North Bridge Street right of way | **Soil:** Not Sampled **Groundwater:** Not Encountered **Soil gas**: Sampled | 5.5-6.0 |

| Location (Total Depth feet bgs) | Soil Sample Depth (feet bgs) | Analysis | Objectives | Soil and/or Groundwater Sample Selection (justification) | Monitoring Well Installed (Screened Interval feet bgs) |
|---|---|---|---|---|---|
| SG-11 (8.0) | (Soil Gas) 7.5-8.0 | TO-15 VOCs | Assess vapor conditions in the source area of the LNAPL plume | **Soil:** Not Sampled **Groundwater:** Not Encountered **Soil gas:** Sampled | 7.5-8.0 |
| SG-12 (6.0) | (Soil Gas) 5.5-6.0 | TO-15 VOCs | Assess vapor conditions to the west within the West Broad Street right of way | **Soil:** Not Sampled **Groundwater:** Not Encountered **Soil gas:** Sampled | 5.5-6.0 |
| SG-13 (6.0) | (Soil Gas) 5.5-6.0 | TO-15 VOCs | Horizontally define the vapor conditions to the northwest within the West Broad Street right of way | **Soil:** Not Sampled **Groundwater:** Not Encountered **Soil gas:** Sampled | 5.5-6.0 |
| SG-14 (7.0) | (Soil Gas) 6.0-7.0 | TO-15 VOCs | Horizontally define the vapor conditions to the west within the West Broad Street right of way | **Soil:** Not Sampled **Groundwater:** Not Encountered **Soil gas:** Sampled | 6.0-7.0 |
| SG-15 (6.0) | (Soil Gas) 5.0-6.0 | TO-15 VOCs | Horizontally define the vapor conditions to the west within the West Broad Street right of way | **Soil:** Not Sampled **Groundwater:** Not Encountered **Soil gas:** Sampled | 5.0-6.0 |
| SG-16 (7.0) | (Soil Gas) 6.0-7.0 | TO-15 VOCs | Horizontally define the vapor conditions to the southwest within the South Bridge Street right of way | **Soil:** Not Sampled **Groundwater:** Not Encountered **Soil gas:** Sampled | 6.0-7.0 |
| SG-17 (6.0) | (Soil Gas) 5.0-6.0 | TO-15 VOCs | Horizontally define the vapor conditions to the northwest within the North Bridge Street right of way | **Soil:** Not Sampled **Groundwater:** Not Encountered **Soil gas:** Sampled | 5.0-6.0 |
| SG-18 (6.0) | (Soil Gas) 5.5-6.0 | TO-15 VOCs | Horizontally define the vapor conditions to the north within the East Broad Street right of way | **Soil:** Not Sampled **Groundwater:** Not Encountered **Soil gas:** Sampled | 5.5-6.0 |

| Location (Total Depth feet bgs) | Soil Sample Depth (feet bgs) | Analysis | Objectives | Soil and/or Groundwater Sample Selection (justification) | Monitoring Well Installed (Screened Interval feet bgs) |
|---|---|---|---|---|---|
| SG-19 (6.0) | (Soil Gas) 5.5-6.0 | TO-15 VOCs | Horizontally define the vapor conditions to the north within the North Bridge Street right of way | **Soil:** Not Sampled **Groundwater:** Not Encountered **Soil gas:** Sampled | 5.5-6.0 |
| SG-20 | (Sub-Slab Soil Gas) 0.5 | TO-15 VOCs | Sub-slab vapor point installed in west adjoining building structure | **Soil:** Not Sampled **Groundwater:** Not Encountered **Soil gas:** Sampled | Sub-Slab |
| SG-21 | (Sub-Slab Soil Gas) 0.5 | TO-15 VOCs | Sub-slab vapor point installed in northwest adjoining building structure | **Soil:** Not Sampled **Groundwater:** Not Encountered **Soil gas:** Sampled | Sub-Slab |

GRO = gasoline range organics
ppm = parts per million

The soil boring, monitoring well, and soil vapor locations were selected to identify and delineate the potential impact of contaminants to the Site relative to release C-0162-14. Figures 3A through Figure 5 depict the sample locations and a summary of analytical results on scaled maps.

### 1.7.1 Soil Boring Advancement and Soil Sampling

The 23 soil borings were advanced to the desired depth using either a hand auger equipped with a stainless steel bucket or a Geoprobe® drill rig. Soil sampling was performed for soil classification, verification of subsurface geologic conditions, and for investigating the potential and/or extent of soil and groundwater contamination at the Site. Soil samples were generally collected on a continuous basis using a stainless steel bucket in the case of the hand auger or a 5-foot long macro-core sampler in the case of the Geoprobe® drill rig.

Soil collected from one-foot sample intervals was screened using a PID to determine if VOCs were present. Soil from specific depths was placed in plastic bags and allowed to volatilize. The headspace within each bag was then monitored with the PID to detect trace levels of VOCs in the air space within the plastic bag. The PID utilizes a 10.2 electron volts (eV) lamp. PID field-screening results are documented on soil boring logs presented in Appendix A.

Upon completion of the investigation, soil borings were abandoned by placing the soil cuttings back into the borehole, filling the void with bentonite chips, hydrating the chips, resurfacing and returning the area to its pre-drilling condition.

### 1.7.2 Monitoring Well Installation & Groundwater Sampling

Nineteen monitoring wells (MW-1 through 14 and MW-16 through MW-20) and one temporary monitoring well (TMW-18) installed by PM (Figures 4A and 4B) were constructed of 1-inch or 2-inch diameter, schedule 40 PVC casing with a 5-foot and/or 10-inch long, 0.020-inch slotted

screen. Well depth, well materials, and screened intervals are documented on the well construction diagrams presented in Appendix A. The wells were developed using either a new disposable 0.9-inch diameter bailer or peristaltic pump equipped with new, chemically inert, 3/8-inch diameter polyethylene and silicon tubing. Well development was generally performed by purging until clear, turbid free groundwater was observed or the wells purged repeatedly to dryness.

Groundwater samples were collected from each monitoring well with care taken to avoid the potential for cross contamination between the samples and to prevent loss of volatiles to the atmosphere. The groundwater samples were collected using low flow techniques without being filtered in general accordance with the October 22, 2004 MDEQ Operational Memorandum No. 2 Sampling and Analysis, Attachment 5 Collection of Samples for Comparison to Generic Criteria. Groundwater samples were transferred from the low-flow pump discharge line directly into appropriately labeled sample containers with Teflon lined lids.

### 1.7.3 Soil Vapor Monitoring Points

Four sub-slab soil gas points (SG-1, SG-2, SG-20 and SG-21), and 17 soil vapor monitoring points (SG-3 through SG-19) were installed between December 2014 and January 2016 to evaluate the soil, groundwater, and LNAPL volatilization to indoor air inhalation exposure pathways (Figure 5 and Table 3).

Soil gas sampling activities were conducted in general accordance with MDEQ May 2013 Guidance Document for the Vapor Intrusion Pathway. Sample collection included purging three gas point/sand pack volumes at low-flow (200 ml/minute) from each soil gas sampling point, followed by the collection of one soil gas sample, using 1-liter vacuum bottles or summa canisters, for laboratory analysis of VOCs. The vacuum bottles or summa canisters were regulated with a flow rate of 200 mL/minute, which was pre-set at the laboratory. Helium was used as the tracer gas for leak detection.

The soil gas sample points were installed within the annulus of a bore hole advanced to the desired depth using either a hand auger equipped with a stainless steel bucket or a Geoprobe® drill rig. A brass Vapor Pin® with silicone sleeve is installed as the sample point and sealed in the 0.675 inch borehole. A brass fitting and protective cap are installed on the top of the vapor sample point and protected with a flush mount stainless steel protective cover.

For sub-slab points, a brass Vapor Pin® with silicone sleeve is installed as the sub-slab sample point and sealed in the 0.675 inch borehole. A brass fitting and protective cap are installed on the top of the vapor sample point and protected with a flush mount stainless steel protective cover.

### 1.7.4 Quality Assurance and Quality Control

During drilling operations, the drilling equipment was cleaned to minimize the possibility of cross contamination. These procedures included cleaning equipment with a phosphate free solution (i.e., Alconox®) and rinsing with distilled water after each sample collection. Drilling and sampling equipment was also cleaned in this manner prior to initiating field activities.

Soil samples for VOC analysis were preserved with methanol in accordance with Untied States Environmental Protection Agency (USEPA) method 5035 modified and then placed in

appropriately labeled containers with Teflon® lined lids and/or sanitized glass jars, placed in an ice packed cooler and transported under chain of custody procedures for laboratory analysis within applicable holding times.

Quality Assurance/Quality Control (QA/QC) samples were submitted for sampling activities that were conducted by PM between December 2014 and January 2016 as follows:

**December 2014**

- A-1 Trip Blank (methanol)
- A-2 Co-Located (SB-4 at 9.0-10.0')
- A-3 Co-Located (SB-7 at 19.0-20.0')

**September 2015**

- A-1 Trip Blank
- A-2 Co-Located (SB-16 at 6.0-7.0)
- A-3 Field Blank
- A-4 Equipment Blank (macro core)
- A-5 Equipment Blank (hand auger)
- A-6 Co-located (SB-12 at 7.0-8.0)

**January 2016**

- A-1 Trip Blank (methanol)
- A-2 Co-located (SB-21 at 7.0-8.0)

The QA/QC samples were submitted for laboratory analysis of gasoline VOCs. In general, the results of the QA/QC samples demonstrated that no cross contamination occurred, and no outside influences affected the accuracy of the analysis (Appendix B).

### 1.7.5 Surveying

A location and elevation survey of soil borings and top of monitoring wells was conducted by PM using a total station relative to an established benchmark. Ground level and top of well casing elevations are presented in Table 4.

### 1.7.6 Groundwater Elevation Measurements

Groundwater levels and LNAPL thicknesses were measured in permanent monitoring wells between December 2014 and January 2016. Groundwater levels and LNAPL thicknesses were recorded to the nearest 0.01-foot using an oil-water interface probe. The interface probe meter was decontaminated by washing and rinsing between each use to avoid the potential for cross contamination. Potentiometric surface elevations were recorded by measuring the depth to water and LNAPL thickness (if present) from the top of casing in each well. A summary of measurements for the potentiometric surface is presented in Table 4. Groundwater potentiometric surface maps for the Site are presented in Figures 7A and 7B for the October 5, 2015 and January 19, 2016 measurement dates.

## 1.8 Soil Conditions and Characteristics

### 1.8.1 Geology

Three generalized geologic cross-sections (A–A', B–B', and C–C'), based on the soil boring logs (Appendix A), are presented in Figures 8A and 8B, 9A and 9B, and 10A and 10B, respectively. The cross-sections depict the subsurface geology underlying the Site and adjoining properties. Summaries of soil, groundwater, and soil vapor analytical results are provided on these vertical profile cross-sections.

The study area geology generally consists of up to 19 feet of sand/gravel overlying clay to the maximum explored depth of 20 feet bgs. The shallow sand/gravel pinches out to the north (e.g., Hamrick Street) prior to encountering the Shiawassee River (Figure 1) that flows east to west, approximately 0.1 miles to the north of the subject property (Appendix A). Groundwater is encountered in the shallow sand/gravel between 6 and 12 feet bgs (Table 4).

### 1.8.2 Soil Contamination

Between December 2014 and January 2016, PM advanced 23 soil borings (SB-1 through SB-23) to determine the extent of impacts resulting from gasoline release C-0162-14. Additionally, MDEQ completed investigation activities of the surrounding area. Results of soil sampling activities completed by PM and the MDEQ are summarized in Figures 3A, 3B, and 8A through 10A, and Table 1. Complete laboratory reports are presented in Appendix B. Detected concentrations of VOCs and polynuclear aromatic compounds (PNAs; MDEQ samples were analyzed for PNAs) were compared to applicable MDEQ Part 213 Tier 1 RBSL (Table 1).

Soil contamination resulting from confirmed release C-0162-14 exists at the Site and surrounding area at concentrations that exceed the MDEQ Part 213 Tier 1 RBSLs for Residential and Nonresidential DWP, GSIP, and Ambient Air Infinite Source VSI, SVII, the Residential and Nonresidential VISLs; and the MDEQ LNAPL screening levels. The horizontal extent of soil impact is defined below the DWP and GSIP RBSLs or laboratory MDLs to the east (GP-13, SB-9, SB-11, and SB-12), south (GP-16, SB-9, SB-10, and SB-18), and west (SB-17, SB-19, SB-20, SB-21, and SG-14) (Figure 3A and Table 1). The soil impact is defined to the north by the North Bridge Street plume (Figure 3B and Table 1; Refer to Section 1.8.3). The vertical extent of soil impact is defined by the groundwater table and in the lower clay unit (SB-1 through SB-7, SB-14, SB-15, and GP-15) (Figures 7 through 9).

The analytical results and applicable Residential/Nonresidential MDEQ Part 213 Tier 1 RBSL exceedances for soil are summarized in the following table:

## Summary of Soil Exceedances

| Location (Total Depth feet bgs) | Sample Depth (feet bgs) | Analysis | Objectives | Soil Exceedances (Applicable Part 213 Tier 1 RBSLs) |
|---|---|---|---|---|
| SB/MW-1 (20.0) | 9.0-10.0, 11.0-12.0, and 19.0-20.0 | Gasoline VOCs and GRO | Assess contaminant concentrations southwest of the gasoline UST basin | **DWP, GSIP, SVII, VSI, and VISLs**: VOCs **GRO:** LNAPL Screening Levels |
| SB/MW-2 (20.0) | 9.0-10.0, 10.0-11, and 19.0-20.0 | Gasoline VOCs and GRO | Assess contaminant concentrations west of the UST basin | **DWP, GSIP, SVII, VSI, and VISLs**: VOCs **GRO:** LNAPL Screening Levels |
| SB/MW-3 (20.0) | 9.0-10.0 and 10.0-11.0 | Gasoline VOCs and GRO | Assess contaminant concentrations north of the UST basin | **DWP, GSIP, SVII, and VISLs**: VOCs **GRO:** LNAPL Screening Levels |
| SB/MW-4 (20.0) | 10.0-11 and 19.0-20.0 | Gasoline VOCs and GRO | Assess contaminant concentrations at the northeastern property boundary | **DWP and GSIP:** VOCs |
| SB/MW-5 (20.0) | 8.0-9.0 and 9.0-10.0 | Gasoline VOCs and GRO | Assess contaminant concentrations up-gradient of the UST system | **DWP, GSIP, SVII, VSI, and VISLs**: VOCs **GRO:** LNAPL Screening Levels |
| SB-6 (20.0) | 9.0-10.0, 12.0-13.0, and 19.0-20.0 | Gasoline VOCs and GRO | Assess contaminant concentrations northeast of UST basin and directly north of fuel dispensers | **DWP, GSIP, SVII, VSI, and VISLs**: VOCs **GRO:** LNAPL Screening Levels |
| SB-7 (20.0) | 10.0-11.0, 11.0-12.0, and 19.0-20.0 | Gasoline VOCs and GRO | Assess contaminant concentrations east of UST basin and directly south of fuel dispensers | **DWP, GSIP, SVII, and VISLs**: VOCs **GRO:** LNAPL Screening Levels |
| SB-8 (20.0) | 9.0-10.0, 10.0-11, and 19.0-20.0 | Gasoline VOCs and GRO | Assess contaminant concentrations east of the fuel dispensers | **DWP, GSIP, SVII, and VISLs**: VOCs **GRO:** LNAPL Screening Levels |
| SB-9/MW-6 (20.0) | 7.0-8.0 | Gasoline VOCs and GRO | Horizontally define the extent of impact to the southeast on east adjoining property | None |
| SB-10/MW-7 (20.0) | 9.0-10.0 | Gasoline VOCs and GRO | Horizontally define the extent of impact south of the Site within the South Bridge Street right of way | None |
| SB-11/MW-8 (20.0) | 7.0-8.0 | Gasoline VOCs and GRO | Horizontally define the extent of impact east of the Site within the East Broad Street right of way | None |
| SB-12/MW-9 (20.0) | 7.0-8.0 | Gasoline VOCs and GRO | Horizontally define the extent of impact east of the Site and assess potential offsite former UST basin | None |
| SB-13/MW-10 (20.0) | 9.0-10.0, 15.0-16.0, and 19.0-20.0 | Gasoline VOCs and GRO | Horizontally define the LNAPL present in MW-3 to the north within the East Broad Street right of way | **DWP, GSIP, SVII, and VISLs**: VOCs **GRO:** LNAPL Screening Levels |

| Location (Total Depth feet bgs) | Sample Depth (feet bgs) | Analysis | Objectives | Soil Exceedances (Applicable Part 213 Tier 1 RBSLs) |
|---|---|---|---|---|
| SB-14/MW-11 (15.0) | 7.0-8.0, 9.0-10.0, and 14.0-15.0 | Gasoline VOCs and GRO | Horizontally define the LNAPL present in MW-3 to the west within the South Bridge Street right of way | **DWP, GSIP, SVII, and VISLs:** VOCs **GRO:** LNAPL Screening Levels |
| SB-15/MW-12 (20.0) | 2.0-3.0, 8.0-9.0, and 19.0-20.0 | Gasoline VOCs and GRO | Horizontally define the LNAPL present in MW-2 to the west within the South Bridge Street right of way | **DWP, GSIP, SVII, VSI, and VISLs:** VOCs **GRO:** LNAPL Screening Levels |
| SB-16/MW-13 (20.0) | 6.0-70 and 12.0-13.0 | Gasoline VOCs and GRO | Horizontally define the LNAPL present in MW-3 to the northwest within the North Bridge Street right of way | **DWP:** Benzene |
| SB-17/MW-14 (20.0) | 6.0-7.0 | Gasoline VOCs and GRO | Horizontally define the extent of impact present to the west within West Broad Street right of way | None |
| SB/TMW-18 | 7.0-8.0 | Gasoline VOCs and GRO | Horizontally define the extent of impact present to the south within South Bridge Street right of way | None |
| SB-19/MW-16 (20.0) | 6.0-7.0 and 19.0-20.0 | Gasoline VOCs and GRO | Horizontally define the extent of impact present to the northwest within West Broad Street right of way | None |
| SB-20/MW-17 (20.0) | 8.0-9.0 | Gasoline VOCs and GRO | Horizontally define the extent of impact present to the southwest within South Bridge Street right of way | None |
| SB-21/MW-18 (20.0) | 7.0-8.0 | Gasoline VOCs and GRO | Horizontally define the extent of impact west of SB-15/MW-12 | None |
| SB-22/MW-19 (20.0) | NA | Gasoline VOCs | Horizontally define the extent of groundwater impact to the northwest | Not Applicable |
| SB-23/MW-20 | NA | Gasoline VOCs | Horizontally define the extent of groundwater impact to the northeast within the East Broad Street right of way | Not Applicable |

NA = Not Applicable

### 1.8.3 Soil Contamination Not Related to the Release and Source

The potential source areas of the petroleum releases in the study area were evaluated by assessing the presence and location of LNAPLs. Mobile LNAPL was observed in a former building sump/drain at 122 North Bridge Street and in current monitoring wells (Table 4) near the UST basin area of the subject property at 110 East Broad Street (MW-1, 2, and 3), including to the west across North Bridge Street (MW-12). As summarized in Table 5 residual LNAPL saturation was identified in soils based on the presence of Csat impacted soil and an estimate of GRO using 40 times the total benzene, toluene, ethylbenzene, and xylenes (collectively BTEX) concentrations in accordance with MDEQ June 24, 2014 NAPL Characterization, Remediation, and Management for Petroleum Releases Guidance Document. In addition, soil dye shake testing indicating positive/negative results for LNAPL (Table 5) was conducted by ECT.

In summary, the locations of mobile/residual LNAPL are presented in Figure 6 and indicate three primary and separate release sites: the Marathon Station located at 120 West Broad Street, the Beacon & Bridge #8 LUST site located at 110 East Broad Street, and at the vacant property area associated with 122 North Bridge Street property. A fourth release area, where no shallow groundwater was observed, is indicated at Hamrick/North Bridge Streets (GP-15-7) based on an estimate of GRO suggesting the presence of residual LNAPL saturation. The release at the Site is apparently associated with the USTs on the western site boundary given the LNAPL impact is centered in that area and generally in deeper smear zone soils between 7 and 10 feet bgs (Table 5). In addition, the residual LNAPL saturation impact (Figure 6) appears to have migrated with groundwater from the mobile LNAPL sites in the direction of groundwater flow (Figures 7A and 7B) at the 1) Site (e.g., flow west and south) and 2) vacant property to the north (e.g., flow southwest).

The Beacon & Bridge #8 and North Bridge Street LNAPL source areas are reasonably distinct (e.g., divisible) both in location (Figure 6) and in chemical signature (Table 5). Of the BTEX constituents in gasoline, toluene and xylenes represent the dominant concentrations or percentages relative to benzene and ethylbenzene. For older releases, toluene will typically degrade faster such that it will no longer be a dominant concentration. The residual LNAPL saturation BTEX chemical signatures in soils were further evaluated based on the observed relative toluene and xylenes percentages as follows:

**North Bridge LNAPL:** The North Bridge Street soil BTEX chemical signature is characterized by the predominance of xylenes and lower relative toluene than ethylbenzene levels that indicate older degraded source material.

**Beacon & Bridge #8 LNAPL:** The Beacon & Bridge #8 soil BTEX chemical signature is generally characterized with toluene and xylenes representing the dominant concentrations or percentages relative to benzene and ethylbenzene indicating more limited relative degradation and what would be expected for or consistent with a newer/recent release.

Therefore, based on the different chemical signatures, the impact identified north of East Broad Street is not assocated with the Beacon and Bridge plume.

## 1.9 Groundwater Conditions and Characteristics

### 1.9.1 Hydrogeology

The study area geology generally consists of up to 19 feet of sand/gravel overlying clay to the maximum explored depth of 20 feet bgs. The shallow sand/gravel pinches out to the north (e.g., Hamrick Street) prior to encountering the Shiawassee River (Figure 1) that flows east to west, approximately 0.1 miles to the north of the Site (Appendix A). Groundwater is encountered in the shallow sand/gravel between 6 and 12 feet bgs (Table 4). The Shiawassee River is impounded by the Main Street dam located to the northeast of the Site. This impoundment results in losing stream conditions, where river water infiltrates (i.e., is lost) into the bordering subsurface facilitating a general western regional groundwater flow component around the dam structure. This is evident by the western and southern groundwater flow components observed in the study area as inferred by the October 5, 2015 and the January 19, 2016 potentiometric surface contour maps presented in Figures 7A and 7B. Locally higher groundwater elevations are observed in

the northern and southern portions of the study area, with a general groundwater low along Broad Street.

The elevation of the lower clay unit below the shallow sand/gravels was contoured (Figure 11) to evaluate the potential for preferential migration in thicker permeable sand/gravel units. In general, the contour map suggests northeast-southwest trending low clay lineaments that may 1) be associated with palaeochannel Shiawassee River deposition given the current Shiawassee River flows locally east to west in the study area and 2) influence the observed general western groundwater flow component.

The western and southern groundwater flow is consistent with the source of the release in the UST basin area and mobile LNAPL in the UST basin/dispenser areas and the groundwater plume (Section 1.9.4) migrating from the Site to the south and west.

### 1.9.2 Regional Groundwater Flow Conditions

The nearest surface water body is the Shiawassee River, located approximately 425 feet north of the Site (Figure 1). Based on review of the topographic features and expressions of the water table (i.e., rivers, streams, lakes, wetlands etc.), regional groundwater flow in the vicinity of the Site likely has a general western component.

### 1.9.3 Estimated Hydraulic Conductivity, Porosity, & Groundwater Velocity

The effective hydraulic conductivity and porosity of the soils was not measured during site investigation activities. The estimated hydraulic conductivity of the sand and gravel aquifer is estimate to be $1 \times 10^{-3}$ cm/sec to $1 \times 10^{-1}$ cm/sec, the effective porosity to be 0.25 (unitless), and the hydraulic gradient to be 0.0027 feet/foot. Thus the approximate groundwater velocity at the Site is approximately 11.3 feet per year to 1,130 feet per year.

### 1.9.4 Groundwater Contamination

A summary of groundwater analytical results are presented in Table 2 and Figures 4A, 4B, and 8B through 10B. Complete laboratory reports are presented in Appendix B. Groundwater contamination resulting from confirmed release C-0162-14 exists at the Site at concentrations that exceed the MDEQ Part 213 Tier 1 RBSLs for Residential and Nonresidential DW and GSI RBSLs. Concentrations are also present at MW-1, MW-2, MW-3, and MW-11 above the Residential GVII RBSLs. Based on the shallow groundwater encountered (i.e. less than 10.0 feet bgs) at MW-5, MW-12, MW-13, MW-14, MW-16, MW-19, and MW-20, groundwater analytical results were also compared to the Residential and Nonresidential VISLs. Measurable LNAPL was identified in permanent monitoring wells MW-1, MW-2, MW-3, and MW-12, at thicknesses ranging from 0.01-feet to 0.74-feet. The horizontal extent of groundwater impact is defined below the DW and GSI RBSLs or laboratory MDLs to the east (MW-6, MW-8, and MW-9), to the south (MW-6 and TMW-18), and west (MW-14, MW-17, and MW-18) (Figure 4A and Table 2). The ground impact is defined to the north by the North Bridge Street plume (Figure 4B and Table 2; Section 1.9.5). The vertical extent of groundwater impact is defined by the lower clay unit (Figures 8B through 10B).

Mobile LNAPL resulting from the confirmed release C-0162-14 exists at the Site (MW-1 through MW-3) in the general vicinity of the UST basin where the release occurred and immediately down-

gradient (MW-12). Measurable LNAPL was identified in permanent monitoring wells MW-1, MW-2, MW-3, and MW-12, at thicknesses ranging from 0.01-feet to 0.74-feet. The mobile LNAPL is delineated horizontally in all directions and vertically to a depth of approximately 13.0 feet bgs. Groundwater monitoring events conducted between December 2014 and January 2016 demonstrate that a general trend is observed as groundwater lowers to approximately 10.0 feet below ground surface, at which point higher apparent LNAPL thickness is present.

The exceedances of applicable Residential and Nonresidential MDEQ Part 213 Tier 1 RBSLs for groundwater are summarized in the following table:

**Summary of Groundwater Exceedances**

| Location | Well Screen Interval (feet bgs) | Analysis | Objectives | Groundwater Exceedances (Applicable Part 213 Tier 1 RBSLs) |
|---|---|---|---|---|
| SB/MW-1 (20.0) | MW-1 (9.0-14.0) | Gasoline VOCs and GRO | Assess contaminant concentrations southwest of the gasoline UST basin | Mobile **LNAPL** |
| SB/MW-2 (20.0) | MW-2 (9.14-14.14) | Gasoline VOCs and GRO | Assess contaminant concentrations west of the UST basin | Mobile **LNAPL** |
| SB/MW-3 (20.0) | MW-3 (8.80-13.80) | Gasoline VOCs and GRO | Assess contaminant concentrations north of the UST basin | Mobile **LNAPL** |
| SB/MW-4 (20.0) | MW-4 (7.90-12.90) | Gasoline VOCs and GRO | Assess contaminant concentrations at the northeastern property boundary | **DW and GSI:** VOCs |
| SB/MW-5 (20.0) | MW-5 (8.10-13.10) | Gasoline VOCs and GRO | Assess contaminant concentrations up-gradient of the UST system | **DW and GSI:** VOCs |
| SB-9/MW-6 (20.0) | MW-6 (6.74-11.74) | Gasoline VOCs and GRO | Horizontally define the extent of impact to the southeast on east adjoining property | None |
| SB-10/MW-7 (20.0) | MW-7 (8.16-13.16) | Gasoline VOCs and GRO | Horizontally define the extent of impact south of the Site within the South Bridge Street right of way | **DW:** Benzene |
| SB-11/MW-8 (20.0) | MW-8 (9.18-14.18) | Gasoline VOCs and GRO | Horizontally define the extent of impact east of the Site within the East Broad Street right of way | None |
| SB-12/MW-9 (20.0) | MW-9 (7.20-12.20) | Gasoline VOCs and GRO | Horizontally define the extent of impact east of the Site and assess potential offsite former UST basin | None |
| SB-13/MW-10 (20.0) | MW-10 (11.95-16.95) | Gasoline VOCs and GRO | Horizontally define the LNAPL present in MW-3 to the north within the East Broad Street right of way | **DW:** Benzene<br>**GSI:** Xylenes, 1,23-TMB, and 1,2,4-TMB |
| SB-14/MW-11 (25.0) | MW-11 (7.83-12.83) | Gasoline VOCs and GRO | Horizontally define the LNAPL present in MW-3 to the west within the South Bridge Street right of way | **DW, GSI, and GVII:** VOCs<br>**VISLs:** Benzene and Ethylbenzene |

| Location | Well Screen Interval (feet bgs) | Analysis | Objectives | Groundwater Exceedances (Applicable Part 213 Tier 1 RBSLs) |
|---|---|---|---|---|
| SB-15/MW-12 (20.0) | MW-12 (7.30-12.30) | Gasoline VOCs and GRO | Horizontally define the LNAPL present in MW-2 to the west within the South Bridge Street right of way | Mobile **LNAPL** |
| SB-16/MW-13 (20.0) | MW-13 (5.79-10.79) | Gasoline VOCs and GRO | Horizontally define the LNAPL present in MW-3 to the northwest within the North Bridge Street right of way | **DW, GSI, and VISLs:** Benzene |
| SB-17/MW-14 (20.0) | MW-14 (6.48-11.48) | Gasoline VOCs and GRO | Horizontally define the extent of impact present to the west within West Broad Street right of way | None |
| SB/TMW-18 | TMW-18 (7.0-12.0) | Gasoline VOCs and GRO | Horizontally define the extent of impact present to the south within South Bridge Street right of way | None |
| SB-19/MW-16 (20.0) | MW-16 (6.14-11.14) | Gasoline VOCs and GRO | Horizontally define the extent of impact present to the northwest within West Broad Street right of way | None |
| SB-20/MW-17 (20.0) | MW-17 (8.1-13.1) | Gasoline VOCs and GRO | Horizontally define the extent of impact present to the southwest within South Bridge Street right of way | None |
| SB-21/MW-18 (20.0) | MW-18 (7.37-12.37) | Gasoline VOCs and GRO | Horizontally define the extent of impact west of SB-15/MW-12 | None |
| SB-22/MW-19 (20.0) | MW-19 (3.38-8.38) | Gasoline VOCs | Horizontally define the extent of groundwater impact to the northwest | None |
| SB-23/MW-20 | MW-20 (6.70-11.70) | Gasoline VOCs | Horizontally define the extent of groundwater impact to the northeast within the East Broad Street right of way | None |

NA = Not Applicable

### 1.9.5 Groundwater Contamination Not Related to Release or Source

The petroleum hydrocarbon groundwater plumes in the study area were evaluated using the cumulative listed VOC groundwater sampling data (Table 6) that was collected between 2012 and 2016 by PM, Strata, and ECT. The listed VOCs include the primary contaminants of concern (BTEX, methyl-tertbutyl ether (MTBE), and TMBs that were consistently analyzed by all parties. As highlighted (red boxes) in Table 6, ten repeat and proximate location analyte and total listed VOC data show that the groundwater concentrations are generally consistent (e.g., stable) over the three-year sampling period, such that contouring the data base to evaluate regional plume conditions is reasonable allowing for extended aerial coverage.

Figure 12 presents the contour (10X log scale) map of the total listed VOC concentrations (Table 6) for the cumulative 2012 to 2016 data and shows three VOC groundwater plumes. A groundwater plume is associated with the LNAPL release (Figure 6) identified at the Marathon Station located at 120 West Broad Street. The absence of groundwater impact at the MDEQ

locations GP-15-10, GP-15-13, MW-14, and MW-19 separates the Marathon plume from the two up gradient (Figure 12) plumes associated with the LNAPL releases (Figure 6) identified at 1) the Beacon & Bridge #8 Site located at 110 East Broad Street and 2) the vacant area associated with 122 North Bridge Street property.

The chemical signatures of the Beacon & Bridge #8 and North Bridge Street VOC groundwater plumes show these plumes are reasonably distinct (e.g., divisible) both in location and release timeframe as follows:

**North Bridge Street Plume:** The North Bridge Street plume (Figure 12) is generally characterized by the predominance of benzene and the chemical marker MTBE (Table 6). The highest total listed VOC concentrations are centered in the vacant property LNAPL area (Figure 6) and extends downgradient in the direction of groundwater flow (Figures 7A and 7B) to the southwest across North Bridge Street. As discussed above, of the BTEX constituents in gasoline, toluene and xylenes represent the dominant concentrations or percentages relative to benzene and ethylbenzene. For older releases, toluene will typically degrade faster such that it will no longer be a dominant concentration. The predominance of benzene and lower toluene levels in the North Bridge Street plume indicates an older degraded plume. MTBE was an additive in gasoline to raise octane and oxygen content that was initially started in 1979, used mainly in 1984/1985 during the transition from leaded gasoline, and then was banned by 2003 for use in Michigan. MTBE is only detected or associated with the North Broad Street plume and is not observed in the more down gradient Beacon & Bridge #8 or Marathon Station plumes. Of note, the similar chemical signature of benzene, low/no toluene, and the marker MTBE identified (Table 6) in the 109 North Bridge Street sump and 208 North Bridge Street catch basin #2 verify this impact is from the North Bridge Street plume. As documented in the August 7, 2006 Storm Sewer Investigation Report prepared by Strata (Appendix E), where gasoline was observed in the basement drain/sump, dye testing indicated the floor drain and/or footing tiles associated with the former 122 North Bridge Street building were connected to the storm sewer system.

**Beacon & Bridge #8 Plume:** The Beacon & Bridge #8 plume (Figure 12) is generally characterized by the full complement of the BTEX compounds (Table 6). The highest total listed VOC concentrations are centered in the LNAPL area (Figure 6) and extend down gradient in the direction of groundwater flow (Figures 7A and 7B) to the west across South Bridge Street and south. Toluene and xylenes more generally represent the dominant concentrations or percentages relative to benzene and ethylbenzene indicating more limited relative degradation and what would be expected for or consistent with a newer/recent release. No MTBE is identified, which is the marker for the North Bridge Street plume indicating limited (if any) co-mingling of the plumes and a means to reasonably distinguish the plumes. Northern contaminant migration or communication from the Beacon & Bridge #8 Site to the North Bridge Street release site associated with the storm sewer system is not a reasonable scenario of concern given 1) the storm sewer along North Bridge Street in the Site area is shallow (ECT November 2014 Technical Memorandum: CB-6/13/17: 3.0 to 5.6 feet bgs) and not in hydraulic communication with impacted groundwater/mobile LNAPL (Figure 12 and Table 4, MW-1/2/3/12: 9.5 to 10.6 feet bgs) and 2) the shallow permeable sand/gravel soils in this area are not conducive to facilitate preferential migration along utility corridors.

Therefore, the Beacon & Bridge #8 and North Bridge Street LNAPL/VOC plume areas are reasonably divisible based on 1) the different chemical signatures and 2) where intervening

lower contaminant concentrations and separating groundwater low along Broad Street indicate limited co-mingling, if any.

### 1.10 Soil Vapor Conditions and Characteristics

Four sub-slab soil gas points (SG-1, SG-2, SG-20 and SG-21), and 17 soil vapor monitoring points (SG-3 through SG-19) were installed between September 2015 and January 2016 to evaluate the soil, groundwater, and LNAPL volatilization to indoor air inhalation exposure pathways (Figure 5 and Table 3).

Soil gas sampling activities were conducted in general accordance with MDEQ May 2013 Guidance Document for the Vapor Intrusion Pathway. Sample collection included purging three gas point/sand pack volumes at low-flow (200 ml/minute) from each soil gas sampling point, followed by the collection of one soil gas sample, using 1-liter vacuum bottles or summa canisters, for laboratory analysis of VOCs. The vacuum bottles or summa canisters were regulated with a flow rate of 200 mL/minute, which was pre-set at the laboratory. Helium was used as the tracer gas for leak detection.

The soil gas sample points were installed within the annulus of a bore hole advanced to the desired depth using either a hand auger equipped with a stainless steel bucket or a Geoprobe® drill rig. Soil boring logs are included in Appendix A. A brass Vapor Pin® with silicone sleeve is installed as the sample point and sealed in the 0.675 inch borehole. A brass fitting and protective cap are installed on the top of the vapor sample point and protected with a flush mount stainless steel protective cover.

For sub-slab points, a brass Vapor Pin® with silicone sleeve is installed as the sub-slab sample point and sealed in the 0.675 inch borehole. A brass fitting and protective cap are installed on the top of the vapor sample point and protected with a flush mount stainless steel protective cover.

#### 1.10.1 Soil Vapor Contamination

The analytical results for the soil vapor samples collected by PM were compared with the May 2013 MDEQ Guidance document for the Vapor Intrusion Pathway.

The petroleum hydrocarbon soil vapor plumes in the study area (Figure 5 were evaluated using the cumulative VOC soil vapor (Deep) sampling data (Table 3) that was collected between 2015 and 2016 by PM. The chemical signatures of the Beacon & Bridge #8 and North Bridge Street VOC soil vapor plumes show that these plumes are reasonably distinct (e.g., divisible) both in location and chemical signatures:

**Beacon & Bridge #8 Vapor Plume:** The Beacon & Bridge #8 plume (Figure 5) is generally characterized by the higher concentration VOCs including BTEX, trimethylpentane, hexane, and heptane (Table 3). These highest VOC concentrations are centered in the North Broad Street/North Bridge Street intersection (SB-7, SG-8, SB-9, SG-10, SG-11, and SG-12), which is consistent with the mobile LNAPL reported (Table 4) in MW-1, MW-2, MW-3, and MW-12 as depicted in Figures 6 and 12.

**North Bridge Street Vapor Plume:** The North Bridge Street plume (Figure 5) is generally characterized by the higher concentration VOCs including BEX and cyclohexane (Table 3)

and the absence of or low levels of those characteristic of the Beacon & Bridge Street plume including toluene, trimethylpentane, hexane, and heptane (Table 4: SG-17 and SG-19).

The soil vapor analytical results are summarized in the following table:

**Summary of Soil Vapor Exceedances**

| Location (Total Depth feet bgs) | Sample Depth (feet bgs) | Analysis | Objectives | Soil Vapor Exceedances (MDEQ VISLs) |
|---|---|---|---|---|
| SG-1 | (Sub-Slab Soil Gas) 0.5 | TO-15 VOCs | Sub-slab vapor point installed in convenience store | None<br>All analytes < 0.1*MDEQ Nonresidential VISL |
| SG-2 | (Sub-Slab Soil Gas) 0.5 | TO-15 VOCs | Sub-slab vapor point installed in convenience store | None<br>All analytes < 0.1*MDEQ Nonresidential VISL |
| SG-3 (8.0) | (Soil Gas) 5.0-6.0 | TO-15 VOCs | Assess vapor conditions near onsite sanitary sewer connection | None |
| SG-4 (7.0) | (Soil Gas) 5.0-6.0 | TO-15 VOCs | Horizontally delineate vapor impact to the south within the South Bridge Street right of way | None |
| SG-5 (6.0) | (Soil Gas) 9.0-10.0 | TO-15 VOCs | Horizontally delineate vapor impact to the southeast | None |
| SG-6 (6.0) | (Soil Gas) 5.0-6.0 | TO-15 VOCs | Horizontally delineate vapor impact to the east | None<br>All analytes < 0.1*MDEQ Residential VISL |
| SG-7S and SG-7D | (Soil Gas) 5.5-.6.0 And 9.0-10.0 | TO-15 VOCs | Assess vapor conditions to the north within the East Broad Street right of way | Shallow: **Residential VISLs** – Benzene<br>Deep: **Residential VISLs** – VOCs and **Nonresidential VISLs and IRASL** - Benzene |
| SG-8 (6.0) | (Soil Gas) 5.5-6.0 | TO-15 VOCs | Assess vapor conditions to the west within the South Bridge Street right of way | **Residential VISLs:** Benzene |
| SG-9 (6.0) | (Soil Gas) 5.5-6.0 | TO-15 VOCs | Assess vapor conditions to the west within the South Bridge Street right of way | **Residential VISLs:** VOCs and **Nonresidential VISLs and IRASL:** Benzene |
| SG-10 (6.0) | (Soil Gas) 5.5-6.0 | TO-15 VOCs | Assess vapor conditions to the northwest within the North Bridge Street right of way | **Residential and Nonresidential VISLs:** Benzene |
| SG-11 (8.0) | (Soil Gas) 7.5-8.0 | TO-15 VOCs | Assess vapor conditions in the source area of the LNAPL plume | **Residential VISLs:** VOCs and **Nonresidential VISLs and IRASL:** Benzene |
| SG-12 (6.0) | (Soil Gas) 5.5-6.0 | TO-15 VOCs | Assess vapor conditions to the west within the West Broad Street right of way | **Residential VISLs:** VOCs |

| Location (Total Depth feet bgs) | Sample Depth (feet bgs) | Analysis | Objectives | Soil Vapor Exceedances (MDEQ VISLs) |
|---|---|---|---|---|
| SG-13 (6.0) | (Soil Gas) 5.5-6.0 | TO-15 VOCs | Horizontally define the vapor conditions to the northwest within the West Broad Street right of way | None All analytes < 0.1*MDEQ Residential VISL |
| SG-14 (7.0) | (Soil Gas) 6.0-7.0 | TO-15 VOCs | Horizontally define the vapor conditions to the west within the West Broad Street right of way | None All analytes < 0.1*MDEQ Residential VISL |
| SG-15 (6.0) | (Soil Gas) 5.0-6.0 | TO-15 VOCs | Horizontally define the vapor conditions to the west within the West Broad Street right of way | None All analytes < 0.1*MDEQ Residential VISL |
| SG-16 (7.0) | (Soil Gas) 6.0-7.0 | TO-15 VOCs | Horizontally define the vapor conditions to the southwest within the South Bridge Street right of way | None |
| SG-17 (6.0) | (Soil Gas) 5.0-6.0 | TO-15 VOCs | Horizontally define the vapor conditions to the northwest within the North Bridge Street right of way | **Residential VISLs:** Benzene and Xylenes |
| SG-18 (6.0) | (Soil Gas) 5.5-6.0 | TO-15 VOCs | Horizontally define the vapor conditions to the north within the East Broad Street right of way | None All analytes < 0.1*MDEQ Residential VISL |
| SG-19 (6.0) | (Soil Gas) 5.5-6.0 | TO-15 VOCs | Horizontally define the vapor conditions to the north within the North Bridge Street right of way | **Residential VISLs:** Xylenes |
| SG-20 | (Sub-Slab Soil Gas) 0.5 | TO-15 VOCs | Sub-slab vapor point installed in west adjoining building structure | None |
| SG-21 | (Sub-Slab Soil Gas) 0.5 | TO-15 VOCs | Sub-slab vapor point installed in northwest adjoining building structure | None |

### 1.11 Conditions and Characteristics in Other Environmental Media

The results of the investigations conducted by PM have not sampled any media other than soil, groundwater, and soil vapor. As such there were no impacts associated with the gasoline UST system release C-0162-14 identified in other environmental media.

## 2.0 TIER 1 RISK-BASED CORRECTIVE ACTION (RBCA) COMPARISON

### 2.1 Exposure Pathway Characterization

The purpose of this section is to evaluate risk by assessing exposure and toxicity to a receptor through exposure route analyses. Each of the applicable pathways were evaluated below. Contaminant concentrations identified in soil and groundwater are compared to the applicable Part 213 Tier 1 Residential and Nonresidential RBSLs in accordance with the MDEQ Cleanup Criteria Requirements for Response Activity (R299.1 – R299.50), revised December 30, 2013. Contaminant concentrations in soil vapor are compared to the Vapor Intrusion Screening Levels outlined in the May 2013 MDEQ Guidance Document for the Vapor Intrusion Pathway.

The following exposure pathways and potential transport mechanisms are considered as a result of the following Exposure Scenario Evaluation:

Potential Source (s):

- LNAPL
- Impacted Soils
- Dissolved Groundwater Plume

Potential Transport Mechanism(s):

- Volatilization and Atmospheric Dispersion
- Volatilization and Enclosed Space Accumulation
- Leaching and Groundwater Transport
- Utility Corridors

Potential Exposure Routes:

- Ingestion of Soil and Groundwater
- Inhalation of Volatiles
- Direct Contact with Soil and Groundwater

Potential Receptors:

- Construction Worker
- Structures
- Utilities
- Site Occupants
- Surface Water Bodies

The following exposure pathways were evaluated, including: groundwater ingestion, soil leaching to groundwater, groundwater surface water interface, direct contact, and ambient and indoor air inhalation from contaminated soil and groundwater. The elimination of exposure pathways demonstrates that unacceptable exposures do not exist and that corrective actions are not required to prevent or mitigate unacceptable exposures.

The Site is currently zoned commercial, which is consistent with a Nonresidential property use in accordance with Part 213. Based upon the current zoning and planned Nonresidential use of the Site, the Part 213 Nonresidential RBSLs are applicable to the Site. The Residential RBSLs are applicable to the impact that has migrated off-site to the west within the South Bridge Street right of way and onto the east, south, and west adjoining properties. Depending upon the results of the selected corrective action (Section 7.0) an Institutional Control may (or may not) be required to limit future use to Nonresidential only.

PM evaluated the applicability of the soil and groundwater volatilization to indoor air inhalation (SVII and GVII) RBSLs using the "Checklist for Determining if the Volatilization to Indoor Air Inhalation RBSLs Apply" located in Appendix C-1 of the May 2013 MDEQ Guidance Document for the Vapor Intrusion Pathway (Appendix C). Subsurface geology in the vadose zone in the study area generally consists of up to 19.0 feet of sand with some gravel underlain by clay to 20.0 feet bgs, the maximum depth explored. Groundwater was encountered in the sand and gravel soils at depths generally ranging between 6.0 and 12.0 feet bgs (Table 4). Mobile LNAPL is present in the UST basin area (MW-1 through MW-3) and down-gradient (MW-12) (Figure 4A). Considering the presence of mobile LNAPL, the conditions in Checklist C-1 are applicable to the Site. Therefore, the volatilization to indoor air inhalation RBSLs and/or the VISLs are applicable.

The vapor intrusion conceptual site model (CSM) outline from the May 2013 MDEQ Guidance Document for the Vapor Intrusion Pathway is included in the Appendix C. The vapor intrusion CSM is included with the LNAPL CSM to create the Site-wide CSM presented in Section 5.0. Figures 8 through 10 depict subsurface geology (soil types), as well as soil, groundwater and soil vapor concentrations identified in proximity to the Site building foundation and other associated vapor intrusion receptors.

The following table summarizes relevant exposure pathways in association with the Site as they pertain to the gasoline release (C-0162-14):

| HUMAN EXPOSURE PATHWAYS | | | | | | | | |
|---|---|---|---|---|---|---|---|---|
| **Pathway** | **Human Exposure Pathway Relevant?** | | **If Pathway Is Relevant, Are Applicable Criteria Exceeded?** (Applicable Criteria) | | | | | |
| | | | **Res** | | | **Nonres** | | |
| | **Yes/ No** | **Justification** | **Soil** | **GW** | **Soil Gas** | **Soil** | **GW** | **Soil Gas** |
| Groundwater Ingestion | Yes | • Groundwater present<br>• Currently no restrictions on groundwater use<br>• LNAPL present | Yes LNAPL | Yes LNAPL | NA | Yes LNAPL | Yes LNAPL | NA |
| Groundwater Surface Water Interface | Yes | • Storm sewers are present at depths above the water table;<br>• Distance considerations to the nearby Shiawassee River;<br>• Continuous nature of the groundwater | Yes LNAPL | Yes LNAPL | NA | Yes LNAPL | Yes LNAPL | NA |
| Indoor Air Inhalation | Yes | • Building structure is present;<br>• Groundwater present;<br>• Depth to groundwater is generally greater than 3 meters<br>• LNAPL present | Yes[1] LNAPL | Yes[2] LNAPL | Yes | Yes[1] LNAPL | Yes[2] LNAPL | Yes |
| Ambient Air Inhalation | Yes | • Potential exposure if surface cover removed;<br>• Residual and Mobile LNAPL is present; | Yes LNAPL | Yes LNAPL | NA | Yes LNAPL | Yes LNAPL | NA |

| HUMAN EXPOSURE PATHWAYS | | | | | | | | |
|---|---|---|---|---|---|---|---|---|
| Pathway | Human Exposure Pathway Relevant? | | If Pathway Is Relevant, Are Applicable Criteria Exceeded? (Applicable Criteria) | | | | | |
| | | | Res | | | Nonres | | |
| | Yes/ No | Justification | Soil | GW | Soil Gas | Soil | GW | Soil Gas |
| Direct Contact | Yes | • Contaminated soil and groundwater is present at intervals consistent with onsite utilities;<br>• Contaminated groundwater and soils are present at intervals (i.e.,<15') where onsite site occupants/utility workers can reasonably be expected to access them;<br>• Residual and Mobile LNAPL present | Yes LNAPL | Yes LNAPL | NA | Yes LNAPL | NA | NA |

NA – Not Applicable
Res – Residential
Nonres – Nonresidential
GW – Groundwater
LNAPL –residual and mobile LNAPL is present in soil and groundwater, respectively
[1] Target analytes were identified in soil above the Part 213 Residential and Nonresidential VISLs, and soil impacts are representative of residual LNAPL saturation.
[2] Target analytes were identified in groundwater above the Residential and Nonresidential VISLs and mobile LNAPL was identified.

| OTHER PATHWAYS | |
|---|---|
| Pathway | Comments |
| Soil Leaching to Groundwater | Relevant due to:<br>• Groundwater is present |
| Migration Via Utility Corridors | Not relevant due to:<br>• Contamination below applicable utility corridors on and adjacent to the Site (Figures 2, 8, 9, and 10) and therefore do not represent pathways for contaminant migration.<br>• Predominant shallow permeable sand and gravel do not facilitate preferential migration within utility corridors. |
| Fire and Explosion Hazards | • While mobile gasoline LNAPL is present, no compounds were identified above the flammability and explosivity screening levels |

## 2.2 Site Classification

In accordance with MDEQ Remediation and Redevelopment Division (RRD) Policy and Procedure Number RRD-21, Leaking Underground Storage Tank (LUST) Site Classification System, Original Effective date August 21, 2003 (revised October 11, 2013), the site is classified

as a Class 2 LUST site based on the presence of mobile LNAPL that may pose a potential threat to human health, safety, environment or other receptors.

## 3.0 TIER 2 RBCA EVALUATION

A Tier 2 RBCA evaluation was not conducted for release C-0162-14 at the Site.

## 4.0 TIER 3 RBCA EVALUATION

A Tier 3 RBCA evaluation was not conducted for release C-0162-14 at the Site.

## 5.0 CONCEPTUAL SITE MODEL (CSM) / LNAPL CONCEPTUAL SITE MODEL (LCSM)

A CSM was developed for the entire Site to evaluate the potential risk drivers present, the possible exposure pathways and the receptors for exposure to the contaminants resultant from the gasoline release C-0162-14. The development of the CSM will assist with identifying site objectives; determining risk-based drivers for action (including non-risk factors); defining remediation metrics, and evaluating remedial strategies for the Site. A Vapor Intrusion CSM (Appendix C) and a LCSM were completed prior to developing the Site-wide CSM in order to account for all potential exposure scenarios. The ASTM standard Guide for development of conceptual site models and remediation strategies for LNAPL release to subsurface (E2531-06E) and the Interstate Technology and Regulatory Council (ITRC) Technical/Regulatory Guidance for Evaluating LNAPL Remedial Technologies for Achieving Project Goals were both used to develop the CSM for the Site.

PM followed procedures from ASTM E2531-06 to develop an LCSM for the Site. The steps for developing an LCSM are:

A. Ensure that immediate hazards are identified and mitigated,
B. Define the presence (or absence) of LNAPL at a site,
C. Perform an initial site assessment,
D. Implement initial and/or interim response actions,
E. Define LNAPL site objectives,
F. Perform a RBCA tiered evaluation of Site,
G. Define risk and non-risk factors,
H. Define remediation metrics,
I. Conduct a feasibility study of corrective action alternatives (evaluate alternatives),
J. Develop remedial action strategy (i.e. a CAP is developed),
K. Design, install, and implement the CAP,
L. Monitor remedial actions, and
M. Long term site management and closure.

The LCSM is a dynamic model that will be reevaluated, and updated if necessary, as new information is obtained relative to the LNAPL present at the site.

The Site is listed as an open LUST site for one confirmed releases (C-0162-14). Subsurface investigations at the Site that were conducted between December 2014 and January 2016 defined the nature and extent of the contamination resulting from a release of petroleum hydrocarbons (gasoline) from the UST system. No immediate hazards were identified during initial and

subsequent site assessment activities **(A)**. Mobile LNAPL (gasoline) was identified in onsite monitoring wells since December 2014 and off-site monitoring well MW-12 since January 2016 **(B)**.

As defined in the December 2009 Interstate Technology and Regulatory Council (ITRC) Technical/Regulatory Guidance for Evaluating LNAPL Remedial Technologies for Achieving Project Goals, three LNAPL conditions generally exist:

- Migrating LNAPL
- Mobile LNAPL
- Residual LNAPL Saturation

Migrating LNAPL is defined as an LNAPL body that is observed to spread or expand laterally or vertically or otherwise result in an increased volume of the LNAPL extent, usually indicated by time-series data (i.e. the LNAPL body is migrating due to LNAPL head). Mobile LNAPL is defined as LNAPL that exceeds residual saturation (i.e. LNAPL may move but it is no longer migrating laterally). Residual LNAPL saturation is defined as the range of partial LNAPL saturation at which LNAPL capillary pressure equals pore entry pressures (i.e. this includes the all LNAPL within the range of near-zero LNAPL saturation up to the maximum LNAPL saturation, below which LNAPL is discontinuous and immobile under the applied gradient).

The release reported to the MDEQ on November 14, 2014 was based upon analytical results forwarded to Beacon & Bridge on November 14, 2014, from the MDEQ relative to site investigation activities completed in the vicinity of the Site during July and August 2014, indicating a release may have occurred at the Site. The UST system was tested by Tankology, Inc. on November 20, 2014. All tanks, product lines, and leak detectors were tested, except the product line for the kerosene UST, which is a suction system. Results indicated that all tanks, lines, and leak detectors passed, except for the no lead UST closest to the fuel dispensers, which failed due to corrosion present on the riser at the top of the tank. On April 27, 2015, the submersible riser, submersible pump and manhole were removed from the no-lead tank that previously failed the tightness test. Additionally the fuel dispensers were replaced. The two no lead tanks were manifolded together so both would function on the remaining submersible pump. Piping under the dispensers was also modified to accommodate the different location of piping to meters under the new fuel dispensers. Subsequent internal inventory records, indicate that the UST system at the Site is operating properly.

As a result of the recovery events and the based on the stable nature of the groundwater contaminant plume, it is unlikely that an LNAPL pressure head still exists at the Site. In addition, mobile LNAPL has only been detected in two wells MW-2 and MW-3, and once (January 2016) in MW-1 and MW-12; refer to Table 4 for LNAPL and groundwater elevation data. Thus, the LNAPL at the Site does not meet the definition of migrating LNAPL and will therefore be referred to as mobile LNAPL **(B)**.

The May 2015 IAR **(C)** defined site assessment goals (site objectives), and completed a RBCA tiered evaluation of the LNAPL conditions, identification of risk factors and exposure routes. Site assessment goals included the delineation and abatement of acute hazard(s) associated with the release(s) of gasoline from the UST system **(E)**. The RBCA tiered evaluation (Section 2.0) included delineation of the nature and extent of soil, groundwater, and soil gas contamination,

classifying the site as a Class 2 Site (mobile NAPL, not migrating), in accordance with November 8, 2013 MDEQ Policy and Procedure Number RRD-21, Leaking Underground Storage Tank Site (LUST) Site Classification System (MDEQ RRD-21) **(F)**. If necessary, the RBCA evaluation will be revisited and the steps repeated as more information is obtained.

Residual and mobile LNAPL remains present and delineated to the Site and within the South Bridge Street right of way. The LNAPL is vertically limited to the smear zone soil, that based on monthly groundwater levels measurements (Table 4) in wells where LNAPL was observed (MW-1, MW-2, MW-3, and MW-12) and positive PID readings (soil boring logs: Appendix A), generally ranges between 9.0 and 13.0 feet bgs. LNAPL interim response measures included hand bailing events to remediate LNAPL/groundwater water mixture from the Site. No interim remedial actions were conducted at the Site for contaminated soil **(D)**.

Plume factors and non-risk factors **(G)** were evaluated in the chart below:

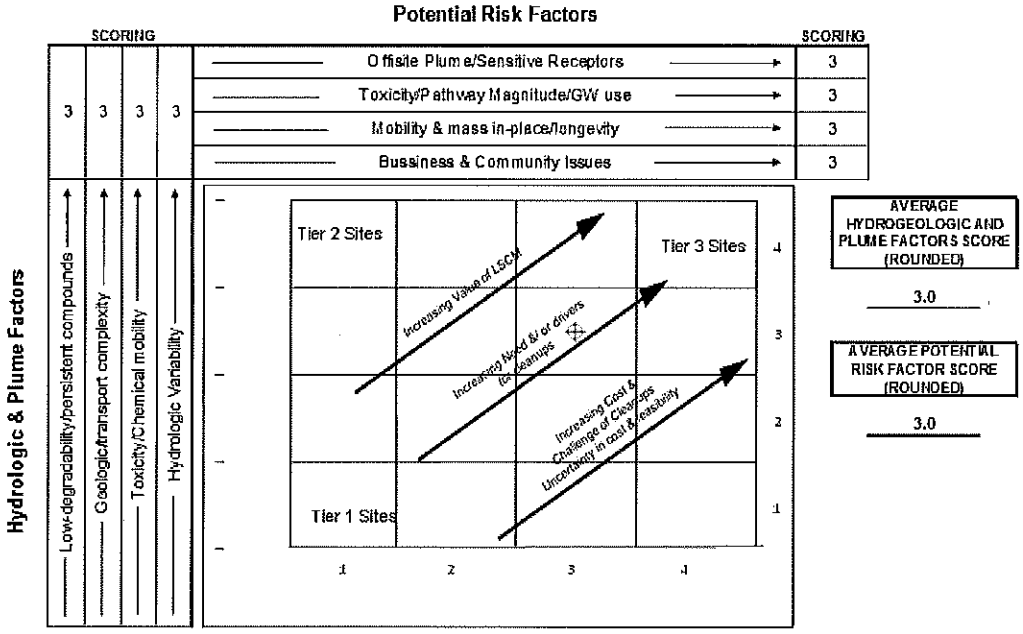


Refer to ASTM Standard Guide for Development of Conceptual Site Models and Remediation Strategies for Light Nonaqueous-Phase Liquids Released to the Subsurface E2531-06

The cleanup goals (metrics) are the Nonresidential MDEQ Part 213 Tier 1 RBSLs for DW, GSI, and GVII for groundwater and the Nonresidential MDEQ Part 213 Tier 1 RBSLs for DWP, GSIP, SVII, and DC for soil contamination on the Site. The cleanup goals are the Residential MDEQ Part 213 Tier 1 RBSLs for DW and GVII for groundwater and the Residential MDEQ Part 213 Tier 1 RBSLs for DWP, SVII, and SDC for soil contamination that has migrated beyond the Site boundaries. The cleanup goals for LNAPL are to ensure that risks are adequately abated, removed, and/or managed. For LNAPL that has migrated beyond the Site boundaries, mobile LNAPL is to be removed to the maximum extent practicable. For LNAPL that remains on the Site mobile LNAPL is to be removed to the maximum extent practicable, until a demonstration can be made that recovery is not necessary **(H)**.

Remedial action alternatives are evaluated in Section 6.0 **(I)**. A remedial action strategy (CAP) was developed, and is summarized, in Section 7.0 **(J)**. The design, implementation and monitoring of the CAP **(K)** and **(L)** will be completed per the schedule developed in Section 7.5. When risks are reduced to acceptable levels a long-term site management plan is implemented or the site is closed **(M)**.

The LCSM is a dynamic model that will be reevaluated, and updated if necessary, as new information is obtained relative to the LNAPL present at the site. If the mobile LNAPL is migrating or additional LNAPL is discovered at the Site, the owner/operator shall implement response activities per Part 213 Section 21307(2) and submit an amendment to the IAR that describes those initial response activities, within 30 days of discovery.

## 6.0 FEASIBILITY STUDY

This feasibility study was prepared to evaluate remedial alternatives that are expected to reduce the hazards and potential for exposure at the Site. Groundwater contamination resulting from confirmed release C-0162-14 exists at the Site at concentrations that exceed the Residential and Nonresidential MDEQ Tier 1 Part 213 RBSLs for DW and GSI RBSLs. Groundwater samples from monitoring wells MW-1, MW-2, MW-3, and MW-11 had concentrations greater than Residential MDEQ Tier 1 RBSLs for GVII. The groundwater impacts are defined to the north by the North Bridge Street plume (Figure 4B and Table 2). Mobile LNAPL resulting from the confirmed release C-0162-14 exists at the Site (MW-1 through MW-3) in the general vicinity of the UST basin where the release occurred and immediately down-gradient (MW-12). Measurable LNAPL was identified in permanent monitoring wells MW-1, MW-2, MW-3, and MW-12, at thicknesses ranging from 0.01-feet to 0.74-feet. The mobile LNAPL is delineated horizontally in all directions and vertically to a depth of approximately13.0 feet below ground surface (bgs).

The purpose of this FS is to identify, analyze, compare, and make recommendations for the most technically and economically feasible remediation alternative. This FS has been prepared based on the technical feasibility, total project costs, environmental impacts, operations and maintenance requirements, and overall effectiveness of selected remediation alternatives. The following sections present the selected remedial alternatives for the evaluation and recommended corrective actions for the residual LNAPL saturation and contaminated groundwater and soils at the Site and adjoining properties.

### 6.1 Cleanup Alternatives

The cleanup goals (Section 7.1.1) include the Nonresidential MDEQ Part 213 Tier 1 RBSLs for DW, GSI, and GVII for groundwater and the Nonresidential MDEQ Part 213 Tier 1 RBSLs for DWP, GSIP, SVII, and DC for soil contamination on the Site. The following cleanup alternatives were evaluated to reduce concentrations and total mass of LNAPL, soil, and groundwater contaminants:

- **LNAPL Sorption and Enhanced Bioremediation**, verification of soil remediation (VSR) sampling, verification of groundwater remediation (VGR) sampling, post remediation soil gas monitoring, and Institutional Controls (land use and groundwater use restrictions) for Site in the form of a restrictive covenant (RC), if necessary (**Recommended**);

- **Dual Phase (LNAPL and groundwater) Extraction (DPE)** remediation system, VSR sampling, VGR sampling, and Institutional Controls (land use and groundwater use restrictions) including on-site RC, if necessary;

- **Self-sustaining Treatment for Active Remediation (STAR)** technology (including treatability study and full scale implementation), VSR sampling, VGR sampling, and Institutional Controls (land use and groundwater use restrictions) including on-site RC, if necessary.

**THIS SPACE INTENTIONALLY LEFT BLANK**

The following table summarizes the remedial alternatives, the advantages, the disadvantages, estimated costs, the effectiveness of the proposed alternative, and project duration for each remedial alternative listed above.

| Alternative | Advantages | Disadvantages | Costs | Effectiveness Feasibility | Time |
|---|---|---|---|---|---|
| **LNAPL Sorption and Enhanced Bioremediation**, and follow-up monitoring (performance plus VSR, VGR, and post remediation soil gas monitoring) and RC as an onsite Institutional control, if necessary. | Reduces LNAPL mass and associated liability, limited O&M and performance monitoring, no groundwater recovery and/or treatment. | Time (two to five years), length and cost of performance monitoring, secondary applications may be necessary. | ±$380,000 refer to Section 7.2 for detailed cost breakdown | Effective and technically feasible. Time requirement (2-5 years) | Estimated 2-4 years of performance monitoring plus 1 year for preparation of RCs and closure request<br><br>3-5 years total |
| Dual phase LNAPL/GW extraction **(DPE) system,** and follow-up monitoring (performance plus VSR and VGR), RC as an onsite Institutional control, if necessary. | Reduces liability, provides effective barrier to further LNAPL migration (while system is operational), limited O&M, limited water recovery/treatment volume, | Cost, effective ROI estimates, will not recover 100% of LNAPL, requires offsite RC, and requires Genesee County alternate Institutional Control (AIC) (currently not feasible). | ±$615,000 refer to Section 7.2 for detailed cost breakdown | Effective and technically feasible. LUST closure May not be possible if Oakland County does not use AIC. | 2-4 years operational 2 years monitoring plus 1 year for preparation of RCs and closure request<br><br>5-7 years total. |
| STAR treatability study, **STAR implementation,** follow up monitoring (including VSR and VGR), and RC as onsite institutional control, if necessary. | In-situ remediation of LNAPL, active O&M not necessary, passively remediates soil, LNAPL, and groundwater at the same time, Lower cost. | Treatability testing required to determine if effective, Long term monitoring, MDEQ approval of Tier 2 risk evaluation, monitoring costs may exceed active remediation costs | ±$775,000 refer to Section 7.2 for detailed cost breakdown | Technically feasible. | Estimated 1 year for testing and implementation, plus 2 years.<br><br>2-3 years total. |

ROI = radius of influence

### 6.1.1 LNAPL Sorption and Enhanced Bioremediation

This remedial option will utilize a patented LNAPL Sorption and Enhanced Bioremediation media dissolved and injected into the UST release source area, VSR sampling, VGR sampling, post remediation soil gas monitoring and Institutional Controls, if necessary to meet the site cleanup goals.

Following the LNAPL Sorption and Enhanced Bioremediation, soil verification (VSR), groundwater verification (VGR), and post remediation soil gas monitoring will be conducted to document whether cleanup goals are met. An onsite RC will be implemented as institutional controls to restrict land use and prohibit specific activities that may result in unacceptable exposure to soil, groundwater, and/or residual LNAPL that remain in the subsurface following LNAPL treatment, if necessary. The following paragraphs provide details to the specific components of this remedial alternative:

- **LNAPL Sorption and Enhanced Bioremediation**

The LNAPL Sorption and Enhanced Bioremediation product NutriBind™ will be used to bind and immobilize the mobile LANPL present and provide elevated sulfate concentrations within groundwater as an alternative anaerobic electron donor for microbial bioremediation. Although aerobic degradation is most efficient, oxygen availability is limited due to low solubility. Thus, anaerobic degradation via sulfate reduction and/or methanogenesis are the dominant naturally occurring degradation processes at Site with gasoline type LNAPL releases. The injected media also enhances naturally occurring biodegradation processes by providing sulfate, a highly soluble electron acceptor, to the naturally occurring sulfate reducing bacteria (SRB) present in most shallow aquifers in Michigan.

- **Media Injection**

The LNAPL Sorption and Enhanced Bioremediation product NutriBind™ will be mixed with municipal tap water to form a sorption media slurry per manufacturer recommendations. Slurry will be mixed in 1,000 gallon or 2,000 gallon batches within a temporary poly tank staged on the Site. Slurry will be injected into up to 50 injection borings located in the plume source area (Figure 13). Preliminary design for injection locations is as follows:

- Up to seven borings on western side of South Bridge Street right-of-way (ROW);
- Up to eight borings on western side of South Bridge Street ROW;
- Up to 15 borings around the Site building;
- Up to 11 borings around the dispenser islands;
- Up to seven borings near eastern Site property boundary; and
- Up to five borings around the UST basin;

The number of borings in each general location may be adjusted based upon surface and/or subsurface obstructions, utilities, and access.

The slurry mass to be injected in each boring will be determined by the calculated mass of contaminants in the anticipated radius of influence (ROI) using the manufacturer recommended product to contaminant mass balance ratios. ROI will be provided by geoprobe contractor based upon injection equipment (tooling, injection nozzle, and pump speed/pressure).

- **Performance Monitoring**

Prior to injection of the sorption media, time zero initial conditions sampling will be conducted at the following 15 monitoring wells:

- **Upgradient**: MW-6 and MW-9
- **Side gradient**: MW-7, MW-17, and MW-20
- **Body of Plume**: MW-1, MW-2, MW-3, MW-4, MW-5, MW-11, and MW-12
- **Downgradient**: MW-14, MW-16, and MW-18.

After injection of the sorption media, remediation performance monitoring will be conducted monthly for six months (M1, M2, M3, M4, M5, and M6) and quarterly for two events (M9 and M12) using the 15 monitoring wells listed above.

Groundwater samples collected from the 15 monitoring wells without LNAPL will be submitted to an independent laboratory, or field measured as noted, for analysis of the following parameters:

- **Primary** (laboratory): Gasoline VOCs (including BTEX, MTBE, EDB, DCA, TMB isomers, n-propylbenzene, isopropylbenzene, naphthalene, and 2-methylnaphthalene), using EPA methods 8260.
- **Secondary** (field measured): pH, dissolved oxygen (DO), oxidation reduction potential (ORP), condcutivity, and temperature.

In general, groundwater levels and LNAPL thickness (if present) from all site wells will be measured to determine groundwater elevations and flow direction before each sampling event.

If, after the eighth performance monitoring event (M12) conducted 12 months after media injections, LNAPL and contaminant concentrations are less than the defined project goals (Section 3.4), VSR, VGR and post remediation soil gas monitoring will commence. If, after the eighth performance monitoring event (M12) conducted 12 months after media injections, LNAPL and contaminant concentrations have decreased, by 50% or more, but are still greater than the defined project goals, then a second media injection event will be conducted in general accordance with the procedures listed previously for Media Injection. The design details for the second injection will be based upon Site conditions documented during the first M9 and M12 performance monitoring events.

Following the second media injection event, if conducted, a second year of performance monitoring events will be conducted in general accordance with the procedures listed in the section and with the previously defined monitoring schedule (M1, M2, M3, M4, M5, M6, M9, and M12).

- **VSR Sampling**

VSR sampling will be conducted after the LNAPL Sorption and Enhanced Bioremediation media has reduced LNAPL mass and dissolved concentrations to project goals listed in Section 3.4. Soil samples will be collected from the vadose zone for comparison to applicable MDEQ Part 213 Tier 1 RBSLs and/or from the smear zone and saturated zone for qualitative verification that cleanup goals and remediation objectives are met. VSR soil boring will be placed, in general, at locations where soil contaminants were historically detected, at locations along the Site

boundaries, and/or throughout the mobile LNAPL plume area. VSR soil sampling will include analysis of gasoline VOCs per EPA methods 8260 (or equivalent).

- **VGR Sampling**

VGR groundwater monitoring sampling will be conducted quarterly for two years (eight quarters) following the performance monitoring for LNAPL Sorption and Enhanced Bioremediation injections.

Groundwater samples will be collected from the up to 15 monitoring wells, listed previously, and submitted to an independent laboratory, or field measured as noted, for analysis of the following parameters:

- **Primary** (laboratory): Gasoline VOCs (including BTEX, MTBE, EDB, DCA, TMB isomers, n-propylbenzene, isopropylbenzene, naphthalene, and 2-methylnaphthalene) using approved EPA method 8260.
- **Secondary** (field measured): pH, DO, ORP, condcutivity, and temperature.

In general, groundwater levels and LNAPL thickness (if present) from all site wells will be measured to determine groundwater elevations and flow direction before each sampling event.

- **Post Remediation Soil Gas Monitoring**

The post remediation soil gas monitoring plan will consist of the following components:

1) Ten existing soil gas monitoring points (SG-1, SG-2, SG-3, SG-4, SG-8, SG-9, SG-11, SG-12, SG-16, and SG-20). The locations of the soil gas sample points are included on Figure 5.
2) Soil vapor samples will be collected in general accordance with and using methods detailed in the May 2013 MDEQ-RRD Guidance Document for the Vapor Intrusion Pathway (May 2013 MDEQ VI Guidance) for laboratory analysis of VOCs using USEPA method TO-15.
3) Soil gas monitoring will be initiated at least three months after the completion of progress monitoring, VSR sampling, and initiation of VGR sampling.
4) Four quarterly soil gas monitoring events will be completed to document potential seasonal fluctuation in soil gas conditions.

Soil gas samples will be collected in electropolished, passivated stainless steel vacuum sampling devices (i.e. SUMMA® Canister) and/or passivated glass vacuum bottles (i.e. Bottle Vac®) supplied by the laboratory using dynamic flux chamber methods. Prior to collecting a soil vapor sample, the sampling apparatus will be leak tested utilizing a flux chamber which encompasses the sample tubing and associated connections and the sampling point. The chamber will be charged with helium prior to purging the sampling point of a maximum of three volumes. A helium detector will be utilized to ensure no leaks are present. The sample devices will be filled using flow-regulators pre-set by the laboratory to a flow rate of 200 ml/minute.

Soil gas samples will be submitted to an independent laboratory for analysis of VOCs using USEPA method TO-15.

- **Institutional Controls**

PM anticipates that the LNAPL Sorption and Enhanced Bioremediation technology will transform most of the contaminant mass in the LNAPL body and subsequent secondary plumes (soil, groundwater, and soil gas) to carbon dioxide and water. Therefore, it is anticipated that concentrations in soil, groundwater, and soil gas will be less than the applicable MDEQ Part 213 Tier 1 RBSLs and VISLs. Depending upon the results of the VSR and VGR sampling, a RC (EQP 3854) will be implemented as an institutional control, if necessary, for the subject property.

### 6.1.2 DPE Remediation System

This remedial option will utilize DPE remediation system, VSR sampling, VGR sampling, and Institutional Controls to meet Site cleanup goals. The DPE remediation system will use up to 12 DPE recovery wells with a remediation system trailer equipped with a rotary vane blower, an oil-water separator, an LNAPL holding tank, a vapor phase granular activated carbon (GAC) treatment vessel, a liquid phase GAC treatment vessel, a discharge line to send treated groundwater to the local storm sewer, and a control panel equipped with PLC and autodialer for remote monitoring and controlling. An AIC, an offsite RC, and an onsite RC will be implemented as institutional controls to restrict land use and prohibit specific activities that may result in unacceptable exposure to soil, groundwater, and/or residual LNAPL that remain in the subsurface following LNAPL collection during DPE operation. The following paragraphs provide details to the specific components of this remedial alternative:

- **DPE Remediation System**

Up to 12 four-inch diameter, recovery wells (RW-01, through RW-12) will be installed throughout the extent of the LNAPL plume (Figure 4A) with a focus on the Site boundaries near the East Broad Street and South Bridge Street Road ROWs and the UST basin located in the center of the property. Variable depth extraction ports (stingers) will be installed in each of the 12 recovery wells and connected via three 4x1 manifolds to a liquid-vapor separation tank. A rotary claw blower will provide vacuum to the system and discharge to a vapor phase GAC tratement vessule prior to atmospheric discharge. The liquid from the liquid-vapor separation tank will be transferred to an oil water seperator where LNAPL will be diverted to an LNAPL holding tank and water will be diverted to a GAC treatment vessel. Pump discharge lines will be constructed of HDPE and burried approximately 12 to 18 inches below grade with a steel tracer line. A PLC panel equiped with auto-dialler will be installed within the treatment trailer/shed for DPE system controls. An emergency shutoff will be located outside the treatment trailer/shed for easy, high visibility access.

During DPE operation, remediation performance sampling will be conducted quarterly (8 events during anticipated 24 month operation period) from the following 15 monitoring wells:

- **Upgradient**: MW-6 and MW-9
- **Side gradient**: MW-7, MW-17, and MW-20
- **Body of Plume**: MW-1, MW-2, MW-3, MW-4, MW-5, MW-11, and MW-12
- **Downgradient**: MW-14, MW-16, and MW-18.

Groundwater samples collected from the 15 monitoring wells without LNAPL will be submitted to an independent laboratory, or field measured as noted, for analysis of the following parameters:

- **Primary** (laboratory): Gasoline VOCs (including BTEX, MTBE, EDB, DCA, TMB isomers, n-propylbenzene, isopropylbenzene, naphthalene, and 2-methylnaphthalene).

- **Secondary** (field measured): pH, DO, ORP, condcutivity, and temperature.

In general, groundwater levels and LNAPL thickness (if present) from all site wells will be measured to determine groundwater elevations and flow direction before each sampling event.

- **VSR Sampling**

VSR sampling will be conducted after the DPE remediation system has recovered LNAPL to the "maximum extent practicable." Soil samples will be collected from the vadose zone for comparison to applicable MDEQ Part 213 Tier 1 RBSLs and/or from the smear zone and saturated zone for qualitative verification that LNAPL removal has met the cleanup goals and remdiation objectives. VSR soil boring will be planced, in general, at locations near the leading edge of contamination (beyond the site boundary), at locations along the Site boundaries, and throughout the LNAPL plume. VSR soil sampling will include analysis of gasoline VOCs per EPA method 8260 (or equivalent).

- **VGR Sampling**

VGR groundwater monitoring sampling will be condcuted quarterly for four quarters following the operation of the DPE remediation system (during which quaterly monitoring will be conducted for 2 years/8 events). The DPE remediation system may be operated for less than (or greater than) two years provided it has recovered LNAPL to the "maximum extent practicable."

Groundwater samples will be collected from the 15 monitoring wells, listed previously, and submitted to an independent laboratory, or field measured as noted, for analysis of the following parameters:

- **Primary** (laboratory): Gasoline VOCs (including BTEX, MTBE, EDB, DCA, TMB isomers, n-propylbenzene, isopropylbenzene, naphthalene, and 2-methylnaphthalene) using approved EPA method 8260.

- **Secondary** (field measured): pH, dissolved oxygen (DO), oxidation reduction potential (ORP), condcutivity, and temperature.

In general, groundwater levels and LNAPL thickness (if present) from all site wells will be measured to determine groundwater elevations and flow direction before each sampling event.

- **Institutional Controls**

A RC as an institutional control for the Site will be recorded with the Genesee County Register of Deeds pursuant to Sections 21310a(3) and 21310(4) of Part 213 requiring the property to remain Nonresidential in use, eliminate soil movement and groundwater use, and/or to provide notice to future owners/operators of the Site that mobile LNAPL is present and the location of said NAPL if mobile NAPL is to remain on the Site.

### 6.1.3 Self-sustaining Treatment for Active Remediation (STAR)

This remedial option will use STAR (Including treatability study and full scale implementation), VSR, VGR, and Institutional Controls (if necessary) to meet Site cleanup goals. STAR will destroy contaminant mass (including LNAPL and contaminants in secondary soil, groundwater, and soil gas plumes) via a controlled combustion event. Initial site screening indicates that the Site and contaminants of concern (gasoline LNAPL from release C-0162-14) are suitable for this technology. The STAR reaction front will not be propagated into the UST basin without first evacuating all products from the USTs. LNAPL located within the coarse UST basin backfill (pea gravel) will continue to be removed via extraction events at monitoring well MW-12 until metrics outlined in the CAP Contingency Plan (section 8.1.2) are met. A treatability test will be conducted using soil, groundwater, and LNAPL collected from the Site. Following the results of the treatability test, a pilot scale or full scale implementation of STAR will be conducted. Prior to implementation of STAR, a workplan will be developed to detail processes for permitting, site preparation (including PVC monitoring well abandonment); remote sensing of STAR reaction processes; soil vapor monitoring, control, extraction, treatment, and discharge; site restoration; and health and safety. The workplan will be submitted to MDEQ prior to commencement of the STAR activities.

Following implementation, VSR and VGR sampling is conducted to demonstrate that Site cleanup goals are met. Institutional controls to restrict land use and prohibit specific activities that may result in unacceptable exposure to soil, groundwater, and/or residual LNAPL that remain following STAR will likely be unnecessary since it is anticipated that most contaminant mass will be destroyed. The following provides details to the specific components of this remedial alternative:

- **STAR**

STAR is an innovative thermal technology based on the principles of low temperature smoldering combustion, where the contaminants are the source of fuel. The process is sustained by the addition of air and is initiated through a short duration, low energy 'ignition event'. Once the process is initiated the energy of the reacting contaminants is used to pre-heat and initiate combustion of both LNAPL and adsorbed/dissolved contaminants throughout the "shark-fin" distribution of contamination in adjacent areas, propagating a combustion front through the contaminated zone in a controlled, self-sustaining, manner (i.e., no external energy or added fuel input following ignition) provided a sufficient flux of oxygen is supplied. Active control of the combustion front is precisely maintained with the oxygen supply. Terminating the injection of air terminates the smoldering reaction instantly. If additional engineering controls are required as a safeguard, nitrogen can be injected to asphyxiate the reaction. It has also been demonstrated that the process self-terminates when the fuel source (i.e., contaminants) are exhausted. The efficient recycling of energy is made possible by the presence of the porous matrix (i.e., contaminated aquifer) that is being remediated. The technology is covered by patents - International PCT Filings PCT/GB2006/004591 and PCT/US12/35248; Granted Patents including US 8,132,987 B2, AU 2006323431 B9, JP4934832, and ZL 2006 8 0052554.X).

The above ground equipment used to implement the technology is similar to that used in Air Sparge (AS) / Soil Vapor Extraction (SVE) systems and includes compressors for sub-surface air delivery, blowers for ground surface vapor collection, and vapor phase activated carbon or a thermal oxidizer for vapor treatment. The specialized equipment associated with the STAR process includes the use of 2-inch diameter, carbon steel direct push ignition wells with a stainless

steel screen, temporary in-well heaters to initiate the process (and associated control system), and subsurface multi-level thermocouple bundles to monitor the combustion process. A continuous emissions monitoring system (CEMS) is installed in the vadose zone above and surrounding the reaction area and within potential soil gas migration corridors to monitor soil gas conditions throughout the STAR process.

- **VSR Sampling**

VSR sampling will be conducted after the STAR has removed combustable LNAPL in the radius of influence (ROI) of the ignition points. Soil samples will be collected from the vadose zone for comparison to applicable MDEQ Part 213 Tier 1 RBSLs and/or from the smear zone and saturated zone for qualitative verification that LNAPL removal has met the cleanup goals and remdiation objectives. VSR soil boring will be planced, in general, at locations wtihin the ROI, near the leading edge of contamination (beyond the site boundaries), at locations along the Site boundaries, and throughout the LNAPL plume. VSR soil sampling will include analysis of gasoline VOCs per EPA method 8260 (or equivalent).

- **VGR Sampling**

VGR groundwater monitoring sampling will be conducted quarterly for eight quarters following the STAR operations. Since the STAR technology is a relativly instantaneous process, there will be no quarterly progress monitoring as with the other remedial alternatives. Therefore, two years of VGR groundwater monitoring will be necessary to verify that groundwater concentrations will decrease after the removal of LNAPL source mass, to demonstrate that concentration rebound (if observed during the first year) is temporary and that concentrations will decrease with time, and to demonstrate that any remaining/residual groundwater plumes are both stable and decreasing.

Groundwater samples will be collected from up to 15 monitoring wells, listed previously, and submitted to an independent laboratory, or field measured as noted, for the following parameters:

- **Primary** (laboratory): Gasoline VOCs (including BTEX, MTBE, EDB, DCA, TMB isomers, n-propylbenzene, isopropylbenzene, naphthalene, and 2-methylnaphthalene) using approved EPA method 8260.

- **Secondary** (field measured): pH, DO, ORP, condcutivity, and temperature.

In general, groundwater levels and LNAPL thickness (if present) from all site wells will be measured to determine groundwater elevations and flow direction before each sampling event.

- **Institutional Controls**

A RC as an institutional control for the Site will be recorded with the Genesee County Register of Deeds pursuant to Sections 21310a(3) and 21310(4) of Part 213 requiring the property to remain Nonresidential in use, eliminate soil movement and groundwater use, and/or to provide notice to future owners/operators of the Site that mobile LNAPL is present and the location of said NAPL if mobile NAPL is to remain on the Site.

### 6.2 Cost Estimates for Remedial Alternatives

The following detailed cost estimates are based on the generic costs for typical remedial system components and designs, as well as information collected during the Site investigations. All costs presented below are strictly budgetary estimates.

- **LNAPL Sorption and Enhanced Bioremediation, VSR, VGR, and Institutional Controls, if necessary:** LNAPL Sorption and Enhanced Bioremediation, VSR, VGR, and institutional controls (if necessary) is an economically and technically feasible remediation alternative for the treatment of residual and mobile LNAPL, and groundwater at the Site, north and west adjoining ROWs. This cost estimate includes LNAPL Sorption and Enhanced Bioremediation design and installation of media, monthly performance monitoring of the Site for one year, a second application of media, monthly performance monitoring of the Site for one year, then VSR, VGR, and post remediation soil gas sampling.

| LNAPL Sorption and Enhanced Bioremediation | |
|---|---|
| **Task** | **Cost Estimate** |
| Installation of up to 50 media injection points, and injection of LNAPL sorption and Enhanced Bioremedation media | $50,000 |
| LNAPL sorption and Enhanced Bioremedation materials (media) | $50,600 |
| Performance Monitoring<br>Nine Performance Monitoring Sample Events ($3,450 each), $31,050<br>Laboratory Analysis of VOCs ($1,530 per event), $13,770<br>Two Performance Progress Reports: ($2,750 each), $5,500 | $56,070 |
| Purge water disposal: $1,250<br>Annual Summary Report, $4,500<br>MDEQ correspondance, Scheduling, and Project Management | $7,000 |
| Second media injection event | $50,000 |
| Second media injection materials (media) | $50,600 |
| Second Round Performance Monitoring (8 events - see above) | $49,840 |
| Year two Correspondance, Scheduling and Management | $6,560 |
| Quarterly Verification of Groundwater Remediation (VGR) Monitoring for Two years (8 events)<br>Each of 8 quarterly events ($9,620 per event) includes:<br>Sample 15 wells: $3,450<br>Laboratory analysis of VOC: $1,530<br>Hydraulic conductivity test: $800<br>Purge water disposal: $1,250<br>Laboratory analysis of QAQC samples for VOCs: $90<br>Semi Annual Progress Reports: $2,500 | $76,960 |
| Soil VSR sampling and analysis | $16,000 |
| Verification of Soil Gas Remediation (VSGR) sampling<br>Four Quarterly Events ($24,800) | $24,800 |
| Each of 8 quarterly events ($6,200 per event) includes:<br>Sample 10 Soil Gas points: $1,400<br>Laboratory analysis of VOC: $2,300<br>Semi Annual Progress Reports: $2,500 | |
| Restrictive Covenant, if Necessary | $3,000 |
| Project management, oversight, and closure report preparation | $18,570 |
| **TOTAL ESTIMATED COST** | **$300,000 to $460,000** |

- **Dual Phase Extraction, VSR, VGR, and Institutional Controls:** DPE, VSR, VGR, and institutional controls (soil/groundwater use on the Site and groundwater use restrictions on the south and west adjoining properties), is an economically feasible remediation alternative for the treatment of mobile LNAPL, soil, and groundwater at the Site, and the north and west adjoining Road ROWs. This cost estimate includes preliminary DPE system design, pilot testing, final DPE system design, installation of up to 12 four inch DPE extraction wells and

associated DPE system components, applicable NPDES/air permits, 24 monthly O&M events, DPE performance monitoring sampling, VSR sampling and VGR sampling.

| **Dual Phase Extraction System** | |
|---|---|
| **Task** | **Cost Estimate** |
| Pilot Test Study | $18,000 |
| NPDES and air discharge permit preparation and fees | $6,000 |
| Installation of up to 12 new DPE wells, system installation, trenching, piping, electrical connections, pavement replacement, and startup | $125,000 |
| DPE System Rental 24 months @ $2,950/month | $70,800 |
| Vapor and liquid-phase carbon and carbon change out<br>Monthly for first 12 months (12 x $4,000 each)<br>Quarterly for second 12 months (4 x $4,000 each) | $64,000 |
| Monthly O&M for 24 months<br>Each of 24 monthly events ($5,900 per event) includes:<br>LNAPL disposal: $2,000<br>Site visit/system inspection: $1,500<br>Influent sample collection/analysis: $300<br>Effluent sample collection/analysis: $300<br>Transmissivity test: $800<br>Progress Reports: $1,000 | $141,600 |
| Eight Quarterly Groundwater Performance Monitoring for 24 months<br>Each Performance Montoring Event ($10,000 per event) includes:<br>Sample 18 wells: $3,500<br>Laboratory analysis of VOC and PNAs: $2,450<br>Hydraulic conductivity test: $800<br>Purge water disposal: $1,250<br>Progress Reports: $2,000 | $80,000 |
| System Shutdown/Removal | $25,000 |
| Soil VSR sampling and analysis | $20,000 |
| Groundwater verification monitoring (4 events) | $40,000 |
| Alternate institutional control (AIC) for contaminants in ROW | $2,500 |
| Offsite restrictive covenant for south adjoining property | $5,000 |
| Restrictive covenant for Site | $2,000 |
| Project management, oversight and report preparation | $15,100 |
| **TOTAL ESTIMATED COST:** | **$615,000** |

- **Self-sustaining Treatment for Active Remediation (STAR) (Including treatability study and full scale implementation), VSR, VGR, and Institutional Controls (if necessary):** Self-sustaining Treatment for Active Remediation (STAR), VSR, VGR, and institutional controls (soil/groundwater use on the Site) is a technically feasible remediation alternative for the treatment of mobile LNAPL, soil, and groundwater at the Site, the south adjoining property, and the west adjoining South Bridge Street Road ROW. This cost estimate includes a

treatability study of STAR, full scale implementation of STAR, VSR sampling, post-remediation soil gas monitoring, eight quarterly verification of groundwater remediation sampling events, and implementation of institutional controls – if necessary.

| **Self-sustaining Treatment for Active Remediation (STAR)** | |
|---|---|
| **Task** | **Cost Estimate** |
| Bench Scale Study to evaluate STAR | $30,000 |
| Design full scale STAR remediation system and prepare workplan for implementation | $25,000 |
| Apply for Part 22 groundwater discharge permit/permit exemption | $6,000 |
| Site preparation<br>Removal of monitoring wells in treatment area ($12,000)<br>Installation of sensors ($20,000)<br>Installation of 5 stainless steel ignition wells ($55,000) | $87,000 |
| Install SVE system<br>12 SVE recovery wells ($32,000)<br>System trenching and piping installation ($28,000)<br>Treatment system carbon/building/trailer ($70,000)<br>Air discharge permit preparation and fees ($4,000) | $134,000 |
| EVO amendment delivery system | $80,000 |
| Implementation of STAR at 5 points ($50,000 per event)<br>Each event will require 48 hours<br>Two technicians will monitor system at all times<br>Soil gas monitoring | $250,000 |
| System Shutdown/Removal | $25,000 |
| Soil VSR sampling and analysis | $25,000 |
| Two soil gas monitoring events ($3,000 per event) | $6,000 |
| Groundwater verification monitoring (8 events) | $80,000 |
| Restrictive covenant for Site (if necessary) | $2,000 |
| Project management, oversight, and report preparation | $25,000 |
| **TOTAL ESTIMATED COST** | **$775,000** |

# 7.0 CORRECTIVE ACTION PLAN

Based on the feasibility analysis conducted in Section 7.0, the recommended remediation alternative is LNAPL Sorption and Enhanced Bioremediation with follow-up soil and groundwater monitoring, and institutional controls (if necessary).

## 7.1 Description of Corrective Action

The LNAPL Sorption and Enhanced Bioremediation product NutriBind™ (Appendix F) will be used to bind and immobilize the mobile LNAPL present and provide elevated sulfate concentrations within groundwater as an alternative anaerobic electron donor for microbial bioremediation. Although aerobic degradation is most efficient, oxygen availability is limited due to low solubility. Thus, anaerobic degradation via sulfate reduction and/or methanogenesis are the dominant naturally occurring degradation processes at Site with gasoline type LNAPL releases. The injected media also enhances naturally occurring biodegradation processes by providing sulfate, a highly soluble electron acceptor, to the naturally occurring sulfate reducing bacteria (SRB) present in most shallow aquifers in Michigan.

The corrective action plan will be implemented in the following phases:

- Develop workplan to define technology specifics
  - mass balance / media volume required,
  - implementation contractors,
  - monitoring details / laboratories,
  - access agreements / notices,
  - contingency plan,
  - etc.
- Implement technology as pilot study;
  - Monitor pilot study performance
  - Gather implementation/performance data
  - Identify potential improvements
  - Identify unanticipated positive/adverse effects/results
- Update/modify workplan for full scale application of technology
- Implement technology as full scale application;
  - Monitor full scale performance
- Post corrective action verification sampling
  - Soil
  - Groundwater
  - Soil Gas
- Documentation and closure request

### 7.1.1 Cleanup Goals

The cleanup goals (metrics) are the Nonresidential MDEQ Part 213 Tier 1 RBSLs for DW, GSI, and GVII for groundwater and the Nonresidential MDEQ Part 213 Tier 1 RBSLs for DWP, GSIP, SVII, and DC for soil contamination on the Site. The cleanup goals are the Residential MDEQ Part 213 Tier 1 RBSLs for DW and GVII for groundwater and the Residential MDEQ Part 213 Tier 1 RBSLs for DWP, SVII, and SDC for soil contamination that has migrated beyond the Site boundaries. The cleanup goals for LNAPL are to ensure that risks are adequately abated,

removed, and/or managed. For LNAPL that has migrated beyond the Site boundaries, mobile LNAPL is to be removed to the maximum extent practicable. For LNAPL that remains on the Site mobile LNAPL is to be removed to the maximum extent practicable, until a demonstration can be made that recovery is not necessary

Sampling of soil and groundwater in the treatment zone (current moble LNAPL plume and residual LNAPL saturation areas) will be conducted as verification of soil remediation (VSR), verification of groundwater remediation (VGR), and post remediation soil gas monitoring following the completion of performance monitoring. If the primary cleanup goals for LNAPL, soil, and groundwater contaminants are not met, then Tier 2 fate and transport modeling, and/or Tier 2 Site Specific Target Levels will be developed as cleanup goals protective of human health and the environment will be used as cleanup goals. If the Tier 2 cleanup goals for LNAPL, soil, and groundwater contaminants are not met, then the contingency plan (Section 8.1.2) will be implemented to modify the CAP or develop a new CAP.

### 7.1.2 Contingency Plan

If the presence of LNAPL, significantly increased contaminant concentrations in groundwater, or expanding plume conditions are observed during the pilot study performance monitoring, full scale performance monitoring, or groundwater verification monitoring programs, implementation of an alternative remedial action may be evaluated. The following criteria or triggers are established to signal the selection and implementation of further remedial measures:

- Contaminant concentrations in groundwater samples in two or more monitoring wells in the main source/plume area (MW-1, MW-2, MW-3, MW-4, MW-5, MW-11, and MW-12) show increasing trends in monitoring wells for more than two consecutive sampling events.

- If residual LNAPL saturation is released to the mobile LNAPL plume (Monitoring Wells MW-1, MW-2, MW-3, and MW-12) and results in a 10 times increase in LNAPL transmissivity.

- If residual LNAPL saturation is released to become mobile LNAPL in source area Monitoring Wells (MW-4, MW-5, MW-7, and MW-11) with a thickness of at least 0.5 feet and a transmissivity of at least 2.0 $ft^2$/day.

- LNAPL is observed in any of the downgradient monitoring wells (MW-14, MW-16, and MW-18).

If the contaminant concentration trigger is observed, then the MDEQ will be notified in the next subsequent report (Section 8.5). The notification will include a review of both current and past groundwater concentration data for the monitoring wells. If appropriate, the suspect wells may be re-sampled within two weeks receipt of the laboratory sample report to confirm the results. If the results are confirmed then the MDEQ will be notified within 30 days with A) justification for continuing with the groundwater monitoring program or B) details of a plan to evaluate and select an alternate remedial option to be implemented.

If either of the residual to mobile LNAPL triggers are observed then LNAPL will be removed via a pump or bailer. The LNAPL plume as a whole will be evaluated for conducting a vacuum

extraction event for the entire mobile LNAPL plume. The LNAPL plume evaluation will include measuring LNAPL thickness and LNAPL transmissivity in four LNAPL plume monitoring wells (MW-1, MW-2, MW-3, and MW-12) and up to four source area monitoring wells with LNAPL (e.g. MW-4, MW-5, MW-7, and MW-11). Measurements will be evaluated with historical data to document the magnitude of LNAPL plume changes, if any. If the LNAPL plume evaluation indicates that the mobile LNAPL plume has become a migrating plume, then a vacuum extraction event for the entire mobile LNAPL plume will be conducted within 30 days.

If the LNAPL trigger is observed, then LNAPL will be removed from the monitoring well and the MDEQ will be notified within 14 days. Immediately following LNAPL removal, the monitoring well will be observed and LNAPL/water recharge data collected to calculate LNAPL transmissivity, if possible. The LNAPL transmissivity, if calculated, will be included in the MDEQ notification. The depth to water and/or LNAPL will be measured in the monitoring well five to ten business days after the LNAPL is observed and removed. If LNAPL is observed during the second data collection period, then the MDEQ will be notified within 30 days with A) justification for continuing with the groundwater monitoring program or B) details of a plan to evaluate and select an alternate remedial option to be implemented.

### 7.2 Pilot Study

A LNAPL Sorption and Enhanced Bioremediation pilot study will be conducted in the LNAPL plume source area (Figure 13) of to evaluate the effectiveness of the technology for the entire plume where groundwater concentrations exceed applicable Part 213 RBSLs.

The LNAPL Sorption and Enhanced Bioremediation product NutriBind™ will be mixed with municipal tap water to form a sorption media slurry per manufacturer recommendations. Slurry will be mixed in 1,000 gallon or 2,000 gallon batches within a temporary poly tank staged on the Site property. Slurry will be injected into up to 50 injection borings located in the plume source area (Figure 13). Preliminary design for injection locations is as follows:

- Up to seven borings on western side of South Bridge Street ROW;
- Up to eight borings on western side of South Bridge Street ROW;
- Up to 15 borings around the Site building;
- Up to 11 borings around the dispenser islands;
- Up to seven borings near eastern Site property boundary; and
- Up to five borings around the UST basin;

The number of borings in each general location may be adjusted based upon surface and/or subsurface obstructions, utilities, and access.

The slurry mass to be injected in each boring will be determined by the calculated mass of contaminants in the anticipated radius of influence (ROI) using the manufacturer recommended product to contaminant mass balance ratios. ROI will be provided by geoprobe contractor based upon injection equipment (tooling, injection nozzle, and pump speed/pressure).

The slurry mass to be injected in each boring starting from a depth of at least three to five feet below the bottom of the LNAPL plume. In areas where LNAPL is not present, injections will start 10 feet below the water table. Injections will start downgradient of and furthest from the LNAPL plume and proceed inward towards the center of the LNAPL plume. These processes will provide

assurance that the media concentrates and contacts the LNAPL plume, and associated dissolved contaminants, and does not move the mobile LNAPL to cover a greater area.

### 7.3 Pilot Study Performance Monitoring

After the pilot study injection of the sorption media, pilot study performance monitoring will be conducted monthly for six months (PM1, PM2, PM3, PM4, PM5, and PM6) and quarterly for two events (PM9 and PM12) using the following 15 monitoring wells:

- **Upgradient**: MW-6 and MW-9
- **Side gradient**: MW-7, MW-17, and MW-20
- **Body of Plume**: MW-1, MW-2, MW-3, MW-4, MW-5, MW-11, and MW-12
- **Downgradient**: MW-14, MW-16, and MW-18.

LNAPL thicknesses and transmissivity tests will be conducted at the four mobile LNAPL plume monitoring wells (MW-1, MW-2, MW-3, and MW-12) during each pilot study monitoring event.

Groundwater samples collected from the 15 monitoring wells without LNAPL will be submitted to an independent laboratory, or field measured as noted, for analysis of the following parameters:

- **Primary** (laboratory): Gasoline VOCs (including BTEX, MTBE, EDB, DCA, TMB isomers, n-propylbenzene, isopropylbenzene, naphthalene, and 2-methylnaphthalene), using EPA methods 8260.
- **Secondary** (field measured): pH, dissolved oxygen (DO), oxidation reduction potential (ORP), conductivity, and temperature.

In general, groundwater levels and LNAPL thickness (if present) from all site wells will be measured to determine groundwater elevations and flow direction before each pilot study monitoring event.

After the eighth performance monitoring event conducted 12 months after media injections (PM12), a pilot study summary report will be prepared and submitted to MDEQ. The pilot study summary report will provide results pilot study performance, including changes to extent of mobile LNAPL plume, transmissivity of mobile LNAPL, extent of concentrations in groundwater that exceed applicable MDEQ Part 213 Tier 1 RBSLs, and contaminant concentrations. The pilot study summary report will document any unanticipated positive effects from the pilot study and/or any adverse results, if any, and will include potential improvements for full scale application, if identified. The pilot study summary report will include work plan components (locations, mass, performance monitoring schedule, reporting requirements, etc.) to apply the LNAPL Sorption and Enhanced Bioremediation media as a full scale application to remediate the remaining LNAPL and groundwater contaminant plume.

### 7.4 Full Scale Application

LNAPL Sorption and Enhanced Bioremediation pilot will be injected throughout the entire mobile LNAPL plume and dissolved contaminant concentration plumes, if still present, after the completion of the pilot study. The specific details for full scale application will be included in a work plan for full scale application, included within the pilot study summary report. In general, the

full scale application will be completed using the procedures for the pilot scale, with updates and modifications made, as necessary.

### 7.5 Full Scale Performance/Verification Monitoring

After the full scale application injection of the sorption media, remediation performance monitoring will be conducted monthly for six months (FM1, FM2, FM3, FM4, FM5, and FM6) and quarterly for two events (FM9 and FM12) using the following 15 monitoring wells:

- **Upgradient**: MW-6 and MW-9
- **Side gradient**: MW-7, MW-17, and MW-20
- **Body of Plume**: MW-1, MW-2, MW-3, MW-4, MW-5, MW-11, and MW-12
- **Downgradient**: MW-14, MW-16, and MW-18.

Groundwater samples collected from the 15 monitoring wells without LNAPL will be submitted to an independent laboratory, or field measured as noted, for analysis of the following parameters:

- **Primary** (laboratory): Gasoline VOCs (including BTEX, MTBE, EDB, DCA, TMB isomers, n-propylbenzene, isopropylbenzene, naphthalene, and 2-methylnaphthalene), using EPA methods 8260.
- **Secondary** (field measured): pH, dissolved oxygen (DO), oxidation reduction potential (ORP), conductivity, and temperature.

In general, groundwater levels and LNAPL thickness (if present) from all site wells will be measured to determine groundwater elevations and flow direction before each sampling event.

If, after the eighth performance monitoring event (FM12) conducted 12 months after full scale media injections, LNAPL and contaminant concentrations are less than the defined project goals (Section 3.4), VSR, VGR, and post remediation soil gas monitoring will commence. If, after the eighth performance monitoring event (FM12) conducted 12 months after media injections, LNAPL and contaminant concentrations have decreased, by 50% or more, but are still greater than the defined project goals, then a second full scale media injection event may be conducted after modifying the full scale implementation work plan to account for current conditions; or an alternative corrective action plan may be developed and implemented.

#### 7.5.1 Verification of Soil Remediation Plan

VSR sampling will be conducted after the LNAPL Sorption and Enhanced Bioremediation performance monitoring is completed. Soil samples will be collected from the vadose zone for comparison to applicable MDEQ Part 213 Tier 1 RBSLs and/or from the smear zone and saturated zone for qualitative verification that LNAPL and soil remediation met the cleanup goals and remediation objectives. While the exact placement of VSR soil boring cannot be determined until after the LNAPL Sorption and Enhanced Bioremediation is implemented the VSR borings will be placed, in general, at locations near the leading edge of contamination, at locations along the Site boundaries, throughout the LNAPL plume, and near the leading edge of treatment zones. VSR sampling specifics will be included in the performance monitoring summary report to be completed after the M12 performance monitoring event.

### 7.5.2 Groundwater Monitoring Plan

Groundwater samples will be collected from the 15 following monitoring wells:

- **Upgradient**: MW-6 and MW-9
- **Side gradient**: MW-7, MW-17, and MW-20
- **Body of Plume**: MW-1, MW-2, MW-3, MW-4, MW-5, MW-11, and MW-12
- **Downgradient**: MW-14, MW-16, and MW-18.

Samples will be submitted to an independent laboratory, or field measured as noted, for analysis of the following parameters to demonstrate primary and secondary lines of evidence of bioremediation:

- **Primary** (laboratory): Gasoline VOCs (including BTEX, MTBE, EDB, DCA, TMB isomers, n-propylbenzene, isopropylbenzene, naphthalene, and 2-methylnaphthalene) using approved EPA method 8260.

- **Secondary** (field measured): pH, DO, ORP, conductivity, and temperature.

In general, groundwater levels and LNAPL thickness (if present) from all site wells will be measured to determine groundwater elevations and flow direction before each sampling event.

### 7.5.3 Groundwater Monitoring Frequency

The monitoring wells will be sampled quarterly for two years to verify the LNAPL, soil, and groundwater contamination is sufficiently reduced to cleanup goal concentrations and that any remaining impacts are stable and decreasing. The proposed monitoring schedule is presented in Section 7.5.

The MDEQ will be notified immediately if the laboratory results of the VGR groundwater monitoring program indicate the need to implement the contingency plan (Section 7.1.2).

### 7.5.4 Field Groundwater Sampling Procedures

**Determination of Static Water Level/LNAPL Thickness:** Static water level and LNAPL thickness, if any, measurements will be recorded using an electronic interface probe, accurate to 0.01-inch, from each monitoring well prior to purging and sampling activities. To avoid the potential for cross contamination, the interface probe will be decontaminated by washing and rinsing between each use. All groundwater level measurements will be recorded within a 24-hour time period to avoid any temporal variations which may occur in groundwater flow systems. Measurements will be made from the top of the casing that are surveyed relative to an onsite benchmark.

**Sample Collection:** Groundwater samples will be collected by personnel who have thoroughly reviewed this monitoring program and are familiar with the sampling procedures. Care will be taken to avoid the potential for cross contamination between samples and to prevent loss of volatiles to the atmosphere. The groundwater samples will be collected using low-flow sampling methods and protocols in general accordance with the October 22, 2004 MDEQ Operational

Memorandum No. 2 Sampling and Analysis, Attachment 5 Collection of Samples for Comparison to Generic Criteria.

Water samples for laboratory analyses of VOCs will be transferred directly from the sample pump discharge line into appropriate sample containers with preservatives.

DO, ORP, conductivity, temperature and pH will be measured in the field during purging activities before sample collection for laboratory analysis.

**Sample Preservation:** Groundwater samples will be collected in the designated size and type of containers required for specific parameters. Sample containers will be filled in such a manner as not to lose any preservative chemicals from the containers.

**Sample Shipment:** The samples will be stored in an ice-packed cooler and transported, with appropriate trip blanks and chain-of-custody forms, to the laboratory for chemical analysis within the appropriate holding times.

**Chain-of-Custody:** Chain-of-custody procedures will be used to allow for the tracing of possession and handling of samples from the time of collection to the completion of laboratory analysis. A chain-of-custody form will accompany each set of samples transported to the laboratory.

**Detection Limits:** Laboratory analysis of all test parameters listed as part of the monitoring program will meet or exceed the target method detection limits in accordance with MDEQ guidance documents such as the following: benzene (1 µg/L), toluene (1 µg/L), ethylbenzene (1 µg/L), total xylenes (3 µg/L), MTBE (5 µg/L), TMBs (1 µg/L), naphthalene (5 µg/L), 2-methylnaphthalene (5 µg/L), n-propylbenzene (1 µg/L), and isopropylbenzene (1 µg/L).

**Quality Assurance/Quality Control:**

Quality Assurance/Quality Control (QA/QC) samples will be submitted for analysis for the final sample event to establish the confidence in the quality of the laboratory results in accordance with the October 22, 2004 MDEQ Operational Memorandum No. 2 Sampling and Analysis, Attachment 5 Collection of Samples for Comparison to Generic Criteria.

- Trip blanks of distilled water for groundwater and methanol for soils will accompany the shipment coolers of samples for VOC analysis to the laboratory to evaluate possible contamination of containers/samples from the time the sample containers are prepared through the field event to the time the samples are received and analyzed at the laboratory. The trip blanks will be analyzed for the VOC species using EPA Method 8260.

- Field blanks of distilled water will be collected in the areas where sample handling and preservation operations occurred to evaluate sample handling, preservation, and shipping procedures. The field blanks will be analyzed for VOCs using approved EPA Methods.

- No equipment blanks to evaluate field decontamination procedures and to determine the likelihood of cross contamination will be necessary during groundwater monitoring because new disposable gloves will be changed between the collection of each sample to prevent cross contamination. Groundwater samples will be collected from each

monitoring well using a peristaltic pump equipped with new, chemically inert, 3/8-inch diameter polyethylene and silicon tubing.

- Collocated (i.e., duplicate) samples of soil and groundwater will be submitted to the laboratory for analysis of VOCs using approved EPA Methods. This will be done to evaluate sampling and analysis reproducibility and estimate the overall precision of the data collection activity. The sample duplicate will be labeled A-#. Sampling personnel will record the actual well number of the duplicate in their field notes. The duplicate location and sample results will be reported in each monitoring report.

- Matrix Spike and Matrix Spike Duplicate (MS/MSD) samples will be prepared specific to the site using soil samples and groundwater samples to measure the ability of the laboratory and method to recover the correct concentration from the media being sampled and evaluate accuracy.

**Well Maintenance:** The condition of each monitoring well will be evaluated for integrity during each monitoring event. All monitoring wells at the Site will be clearly labeled, securely capped, locked, and covered with protective casings. The MDEQ will be notified of replacing or repairing any monitoring well.

**Reporting:** The data from each monitoring event will be evaluated to verify stability of contamination in the perched discontinuous groundwater, and compliance concentrations. Summary reports will be prepared semi-annually to document results for two subsequent quarterly monitoring events. The reports will include a brief description of the methodologies used during groundwater sample collection, a discussion of the analytical results, the presence of any mobile LNAPL, laboratory reports with chain of custody documentation, groundwater level measurements and hydraulic gradients, and a groundwater elevation contour maps. The monitoring reports will be submitted to the MDEQ in accordance with the schedule proposed in Section 7.5.

### 7.5.5 Soil Gas Monitoring Plan

The post remediation soil gas monitoring plan will consist of the following components:

5) Ten existing soil gas monitoring points (SG-1, SG-2, SG-3, SG-4, SG-8, SG-9, SG-11, SG-12, SG-16, and SG-20). The locations of the soil gas sample points are included on Figure 5.
6) Soil vapor samples will be collected in general accordance with and using methods detailed in the May 2013 MDEQ-RRD Guidance Document for the Vapor Intrusion Pathway (May 2013 MDEQ VI Guidance) for laboratory analysis of VOCs using USEPA method TO-15.
7) Soil gas monitoring will be initiated at least three months after the completion of progress monitoring, VSR sampling, and initiation of VGR sampling.
8) Four quarterly soil gas monitoring events will be completed to document potential seasonal fluctuation in soil gas conditions.

Soil gas samples will be collected in electropolished, passivated stainless steel vacuum sampling devices (i.e. SUMMA® Canister) and/or passivated glass vacuum bottles (i.e. Bottle Vac®) supplied by the laboratory using dynamic flux chamber methods. Prior to collecting a soil vapor

sample, the sampling apparatus will be leak tested utilizing a flux chamber which encompasses the sample tubing and associated connections and the sampling point. The chamber will be charged with helium prior to purging the sampling point of a maximum of three volumes. A helium detector will be utilized to ensure no leaks are present. The sample devices will be filled using flow-regulators pre-set by the laboratory to a flow rate of 200 ml/minute.

Soil gas samples will be submitted to an independent laboratory for analysis of VOCs using USEPA method TO-15.

#### 7.5.6 Soil Gas Monitoring Frequency

The existing soil gas monitoring points (SG-1, SG-2, SG-3, SG-4, SG-8, SG-9, SG-11, SG-12, SG-16, and SG-20) will be sampled quarterly (four events) at least three months after the completion of progress monitoring, VSR sampling, and initiation of VGR sampling. The soil gas monitoring points will be sampled quarterly for one year (four events) to document potential seasonal fluctuation in soil gas conditions. The proposed monitoring schedule is presented in Section 7.5.

The MDEQ will be notified after receipt of the laboratory results if the post remediation soil gas monitoring program indicate the need to implement the contingency plan (Section 7.1.2).

### 7.6 Operation and Maintenance

The CAP includes a relatively instantaneous process for contaminant mass destruction/removal. Therefore, it will not require Operation and Maintenance activities after implementation or an Operation and Maintenance Plan.

### 7.7 Reporting

Following approval of the FAR, a pilot study workplan will be prepared. The pilot study workplan will include injection techniques, mass balance / media requirements, implementation contractors, final injection locations. The workplan will also include reporting requirements, and reiterate the contingency plan metrics and actions outlined in Section 7.1.2. The workplan will be submitted to MDEQ to provide documentation of the planned pilot study activities.

The data from each pilot study monitoring event will be evaluated to verify stability of LNAPL and groundwater contamination concentrations, and compliance concentrations. Pilot study performance monitoring reports will be prepared and submitted to MDEQ in general accordance with the schedule proposed in Section 7.8 after the sixth (PM6) and eighth (PM12) pilot study performance monitoring events to document the progress of the pilot study. The reports will include a brief description of the methodologies used during groundwater sample collection, a discussion of the analytical results, the presence of any LNAPL, laboratory reports with chain of custody documentation, groundwater level measurements and hydraulic gradients, and a groundwater elevation contour map.

The second performance monitoring report (completed after the eighth (M12) performance monitoring event) will document one of the following recommendations based upon Site conditions:

- Site conditions meet project goals and VGR may commence;
- Site conditions are improved, and additional (Full Scale) injection events will be completed; or
- Site conditions are not improved enough and an alternative CAP will be prepared.

The pilot study summary report will be prepared and submitted to MDEQ within 45 days after receipt of laboratory analytical reports for the eighth performance monitoring event conducted 12 months after pilot study injections (PM12). The pilot study summary report will provide results pilot study performance, including changes to extent of mobile LNAPL plume, transmissivity of mobile LNAPL, extent of concentrations in groundwater that exceed applicable MDEQ Part 213 Tier 1 RBSLs, and contaminant concentrations. The pilot study summary report will document any unanticipated positive effects from the pilot study and/or any adverse results, if any, and will include potential improvements for full scale application, if identified. The pilot study summary report will include work plan components (locations, mass, performance monitoring schedule, reporting requirements, etc.) to apply the LNAPL Sorption and Enhanced Bioremediation media as a full scale application to remediate the remaining LNAPL and groundwater contaminant plume.

Full scale performance monitoring reports will be prepared and submitted to MDEQ in general accordance with the schedule proposed in Section 7.8 after the sixth (FM6) and eighth (FM12) full scale performance monitoring events to document the progress of the corrective action. The reports will include a brief description of the methodologies used during groundwater sample collection, a discussion of the analytical results, the presence of any LNAPL, laboratory reports with chain of custody documentation, groundwater level measurements and hydraulic gradients, and a groundwater elevation contour map.

The fourth full scale performance monitoring report (completed after the (FM12) full scale performance monitoring event) will document one of the following recommendations based upon Site conditions:

- Site conditions meet project goals and VGR may commence; or
- Site conditions are improved, but do not yet meet project goals; therefore, an alternative groundwater monitoring plan will be proposed until Site project goals are attained;

VGR summary reports will be prepared following the second, fourth, and sixth VGR monitoring events. The reports will include a brief description of the methodologies used during groundwater sample collection, a discussion of the analytical results, the presence of any LNAPL, laboratory reports with chain of custody documentation, groundwater level measurements and hydraulic gradients, and a groundwater elevation contour map. The monitoring reports will be submitted to the MDEQ in general accordance with the schedule proposed in Section 7.5.

If Site conditions meet project goals (Section 8.1) after the eighth quarterly VGR groundwater monitoring event, then a closure report will be prepared in general accordance with Part 213.

### 7.8 Schedule for Implementation of the Corrective Action

The schedule for implementing the corrective action plan presented in Sections 7.0 is as follows:

| **Proposed Corrective Action Start Date** | MDEQ Approval of CAP |
|---|---|
| **Proposed Dates of Key Interim Milestones** | |
| Pre-injection planning | Estimated 1 month after treatabillity testing completed. |
| Pilot study injection design workplan– to be submitted to MDEQ | Estimated 3 to 6 months after pre-design planning is completed |
| Pilot study mobilization/injection event | Estimated 1 to 2 months after Pilot Study Design workplan completed |
| Pilot Study Performance Monitoring | One, Two, Three, Four, Five, Six, Nine, and Twelve months after injection |
| Pilot study Report and Full scale injection design workplan | 45 Days after receipt of PM12 laboratory analytical results |
| Mobilization for Full Scale Injection Event | Estimated 1 to 2 months after Pilot Study Report / Full Scale Design workplan completed |
| Full Scale Performance Monitoring | One, Two, Three, Four, Five, Six, Nine, and Twelve months after Full Sacel Application |
| Full Scale Application Summary Report | 45 Days after receipt of FM12 laboratory analytical results |
| VGR Groundwater Sampling | Quaterly for 24 months (8 events) following completion of Performance Monitoring |
| VSR Soil Sampling | 1 to 6 months following completion of Performance Monitoring |
| VSGR Soil Gas Sampling | 1 to 6 months following completion of Performance Monitoring |
| Drafting and submitting of on-site RC (if necessary) | If necessary, 1 to 6 months after sixth VGR event |
| Preparation and submittal of Closure Report | Estimated 1 to 3 months after final VGR groundwater monitoring event |

The reporting schedule for the corrective action plan presented in Sections 7.0 is as follows:

| **Proposed Corrective Action Start Date** | MDEQ Approval of CAP |
|---|---|
| **Proposed Dates for Submittal of Reports** | |
| Pilot Study injection design workplan | Estimated 4 to 7 months after FAR Approval |
| Pilot Study Progress Monitoring Report(s) | 7 and 13 months after Pilot Study Initiation |
| Full Scale Progress Monitoring Report(s) | 7 and 13 months after Full Scale Application |
| VGR/VSGR Reports | Semi-annual (twice per year) after completion of final Performance Monitoign Event |
| VSR soil sampling report | To be included in Second Semi-annaul VGR/VSGR Report |
| Drafting and submitting of on-site RC (if necessary) | If necessary, 1 to 6 months after sixth VGR event |
| Preparation and submittal of Closure Report | Estimated 1 to 3 months after final VGR groundwater monitoring event |

### 7.9 Restrictions and Notices

**Restrictions**

Following completion of the first year quarterly groundwater verification sampling program, if warrented, an onsite RC (EQP 3854) as institutional controls is proposed to be recorded with the Genesee County Register of Deeds pursuant to Sections 21310a(2) of Part 213 requiring the following restrictions, if necessary. The necessary restrictions may depend on the degree of contaminant verified as a result of the CAP activities. Furthermore, because the proposed CAP and groundwater sampling activities are anticipated to be completed short-term (i.e., within two years) and to eliminate any re-filing because the groundwater verification program results, the RC will be recorded in coordination with the completion of the first year quarterly groundwater sampling program and not as part of this FAR.

- **Summary of Environmental Conditions and Corrective Action.**

The following Summary of Environmental Conditions and Corrective Action will be included in the RC

> Hazardous substances including gasoline VOCs were released from an underground storage tank resulting in contamination of the Property. Soil and groundwater contamination remain present at levels that do not allow unrestricted use of the Property. Specifically, concentrations of regulated substances remain present in the groundwater in excess of the residential drinking water and residential groundwater volatilization to indoor air inhalation RBSLs and in soils in excess of the residential drinking water protection RBSLs. This potential exposure risk has been addressed by preventing the use of the groundwater for ingestion and restricting the Property to Nonresidential use.

Residual (or mobile) LNAPL, including gasoline were properly characterized using a Conceptual Site Model in accordance with American Society for Testing and Materials (ASTM) designation E 2531-06 E1, and will remain in place. The LNAPL exists below the ground surface at depths ranging from 9.0 to 13 feet bgs. The location of the LNAPL in the attached Exhibit 3 (Survey of the Property and Limits of Land or Resource Use Restrictions) describes and provides the location of the institutional control and the horizontal and vertical extent of the LNAPL is described in Exhibit 4. *(Note: Exhibits to be included in final RC).* The restrictions provided for in this Restrictive Covenant serve to prevent unacceptable exposure to hazardous substances as a result of the conditions created by the presence of the LNAPL soil and/or groundwater contaminant concentrations that exceed the unrestricted residential criteria under Section 21304a(2) of the NREPA.

- **Prohibited Land Uses**

The proposed Site RCs will prohibit the following activities that are necessary to reliably restrict exposures to regulated substances, as applicable:

1. The property use must remain consistent with the MDEQ-RRD Nonresidential land use conditions.

   Nonresidential Land Use: This land use is characterized by any use which is not residential in nature and is primarily characterized by industrial and commercial uses. Industrial uses typically involve manufacturing operations engaged in processing and manufacturing of materials or products. Other examples of industrial uses are utility companies, industrial research and development, and petroleum bulk storage. Commercial uses include any business or income-producing use such as commercial warehouses, lumber yards, retail gas stations, auto dealerships and service stations, as well as office buildings, banks, and medical/dental offices (not including hospitals). Commercial uses also include retail businesses whose principal activity is the sale of food or merchandise within an enclosed building and personal service establishments which perform services indoors such as health clubs, barber/beauty salons, photographic studios, etc.

   Any residential use is specifically prohibited from the nonresidential land use category. This would include the primary use of the property for human habitation and includes structures such as single family dwellings, multiple family structures, mobile homes, condominiums, and apartment buildings. Residential use is also characterized by any use which is intended to house, educate, or provide care for children, the elderly, the infirm, or other sensitive populations, and therefore could include day care centers, educational facilities, hospitals, elder care facilities, and nursing homes. The use of any accessory building or portion of an existing building as a dwelling unit permitted for a proprietor or storekeeper and their families, located in the same building as their place of occupation, or for a watchman or caretaker is also prohibited. Any authority that allows for residential use of the Property as a legal non-conforming is also restricted per the prohibitions contained in this restrictive covenant.

- **Prohibited Activities to Eliminate Unacceptable Exposures to Regulated Substances**

1. The construction of wells or other devices used to extract groundwater for consumption, irrigation, or any other purpose, except as provided below:

   (a) Wells and other devices constructed for the purpose of evaluating groundwater quality or to remediate subsurface contamination associated with a release of regulated substances into the environment are permitted, provided the wells or devices are installed by a qualified consultant (QC) approved by the MDEQ to conduct corrective actions with the State of Michigan and the construction of the wells or devices complies with all applicable local, state and federal laws and regulations and does not cause or result in a new release, exacerbation of existing contamination, or any other violation of local, state or federal laws or regulations.

   All groundwater monitoring wells and other similar devices installed as part of the corrective action activities at the site must be properly abandoned when they are no longer needed for their original purpose or modified purpose. Abandonment should be completed in accordance with the American Society of Testing Materials Standard D 5299-92, "Standard Guide for Decommissioning Ground Water Wells, Vadose Zone Monitoring Devices, Boreholes, and Other Devices for Environmental Activities." Proper abandonment of groundwater monitoring wells and other potential conduits for contamination should be performed within 60 days after use has been discontinued.

   (b) Short-term dewatering for construction purposes is permitted provided the dewatering including management and disposal of the groundwater is conducted in accordance with all applicable local, state and federal laws and regulations; and does not cause or result in a new release, exacerbation of existing contamination, or any other violation of local, state and federal environmental laws and regulations.

2. Contaminated soil and groundwater is known to be present on areas of the property. Cleanup criteria applicable to the property at the time of filing this notice did not anticipate any below grade structures, new building construction, or additions to existing buildings at the property. Prior to construction of any below grade structures which will be occupied (e.g., basements) or connected to an occupied building (e.g., crawl spaces, utility and pipe galleries, equipment sumps, etc.), new buildings which will be occupied, or additions to existing buildings which will be occupied on the property, an evaluation of the potential for hazardous substances in the soil and groundwater to volatilize into indoor air should be undertaken to assure the protection of persons who may be present in the buildings and compliance with Section 20107a of the NREPA.

- **Prohibited Activities to Ensure Effectiveness and Integrity of the Corrective Action**

Furthermore, the RCs will prohibit the following activities that are necessary to maintain the effectiveness and integrity of the CAP:

1. The surface pavement in the area of the dispensers and UST systems serves as a barrier for infiltration of water through contaminated soil. As a result, any intrusive activity must include the use of engineering controls to prevent infiltration of water into the contaminated soil underlying such cover until the cover is repaired or replaced. Any excavation or other

intrusive activity, including removing, altering, or disturbing the asphalt cover, that could affect the integrity of the exposure barrier must be repaired or replaced with a cover providing at least an equivalent degree of protection as the original cover within fourteen (14) days of completion of the work that required the intrusion.

**Notices**

The RC (EQP 3854) will be recorded with the Genesee County Regster of Deeds pursuant to Section 21311a of Part 213. Notice (EQP 3872) of the land use restriction that is part of this corrective action plan will be provided to the local unit of government (LUG) township clerk pursuant to Section 21310(a)(5) of Part 213. An additional copy of the LUG notice will be provided to the Genesee County Public Health Department. Once the RC and notice to the LUG are recorded, copies will be provided to the MDEQ along with proof of recording.

Based upon the migration of soil and groundwater contamination at levels above the Part 213 Tier 1 Residential RBSLs beyond the northern, eastern, southern, and western property boundaries, Notices to Impacted Parties of Corrective Action (EQP 3852) were prepared pursuant to Section 21309a (3) of Part 213. Those notices were submitted to the adjoining property owners, easement holders and utility and highway authorities. Copies of the notices are included as Appendix D.

### 7.10 Permits

Section 3112(1) of Part 31, states that any person discharging any waste or waste effluent into the waters of this state must be in possession of a valid authorization to discharge from the MDEQ. Section 3109(1) of Act 451 prohibits the direct or indirect discharge into any waters of the state any substance, including those used for groundwater remediation (i.e. a surrogate fuel), that is or may become injurious to any protected uses of those waters. The department enforces this prohibition through Part 22, Administrative Rules. Groundwater remediation is considered a specific discharge for which an application must be submitted for authorization (via notification with certification), however a full Part 22 permit may not necessary if the appropriate permit procedures are followed for notification (Rule 2211). This CAP was submitted pursuant to Rule 323.2210(u)(iii) of Part 31, Water Resources Protection, of the NREPA, 1994 PA 451, as amended (Part 31). Specifically, Rule 323.2210(u)(iii) allows for a discharge of wastewater to a plume of groundwater contamination without a permit if the discharge is for the purpose of a remedial investigation or action and the work is approved by the division that has compliance oversight. This CAP proposes use of Nutribind™ injections as a response action to address the contamination in the groundwater at the Site. MDEQ approval of this CAP will act as valid authorization to proceed with CAP activities under Rule 2211.

### 7.11 Financial Assurance Mechanism

Pursuant to Section 21309a(2f), since the CAP does not include the operation of a mechanical soil or groundwater remediation system, a Financial Asssurance Mechanism is not necessary.

### 7.12 Corrective Action Discharges

As indicated in Section 7.1 the proposed corrective action requires a groundwater discharge as defined by the State of Michigan (Section 3112(1) of Part 31). Injecting Nutribind™ material into the groundwater at the Site is considered a discharge into waters of the state (groundwater

included). Therefore, CAP approval from the MDEQ will be obtained (Section 7.1) prior to implementing Nutribind™ injections with a surrogate fuel as a groundwater discharge.

**PM Environmental, Inc.**

**REPORT WRITTEN BY:**

Christie L. Santiago, Q.C.
Senior Engineer

**REPORT REVIEWED BY:**

J. Adam Patton, C.H.M.M., Q.C.
Manager of Site Investigation Services

TABLE 1 (1 OF 2)
SUMMARY OF SOIL ANALYTICAL RESULTS
GASOLINE VOCs, GASOLINE RANGE ORGANICS, and PNAs
110 EAST BROAD STREET, LINDEN, MICHIGAN
PM PROJECT # 01-4882-0-002

| Volatile Organic Compounds (VOCs), Gasoline Range Organics (GRO), and Polynuclear Aromatic Compounds (PNAs) (µg/Kg) | | | Benzene | Toluene | Ethylbenzene | Xylenes | Methyl-tert-butyl ether (MTBE) | Ethylene dibromide (EDB) (1,2-Dibromoethane) | 1,2-Dichloroethane | Isopropyl benzene | p-Isopropyltoluene | n-Butylbenzene | Sec-butylbenzene | n-Propylbenzene | 1,2,3-Trimethylbenzene | 1,2,4-Trimethylbenzene | 1,3,5-Trimethylbenzene | Naphthalene | 2-Methylnaphthalene | Other VOCs | Gasoline Range Organics | Acenaphthene | 2-Methylnaphthalene | Naphthalene | Phenanthrene | Pyrene | Other PNAs |
|---|---|---|---|---|---|---|---|---|---|---|---|---|---|---|---|---|---|---|---|---|---|---|---|---|---|---|---|
| Chemical Abstract Service Number (CAS#) | | | 71432 | 108883 | 100414 | 1330207 | 1634044 | 106934 | 107062 | 98828 | 99876 | 104518 | 135988 | 103651 | 526738 | 95636 | 108678 | 91203 | 91576 | Various | | 83329 | 91576 | 91203 | 85018 | 129000 | Various |
| Sample ID | Sample Date | Sample Depth (feet bgs) | VOCs | | | | | | | | | | | | | | | | | | GRO | PNAs | | | | | |
| SB-1 (PM) | 12/18/14 | 9-10' | 8,100 | 150,000 | 71,000 | 380,000 | <2500 | <1000 | <2500 | 9,200 | NA | NA | NA | 31,000 | 65,000 | 230,000 | 65,000 | 35,000 | 32,000 | NA | 2,800,000 | NA | NA | NA | NA | NA | NA |
| SB-1 (ECT) | | | 24,000 | 350,000 | 160,000 | 840,000 | NA | NA | NA | 17,000 | NA | NA | 8,200 | 69,000 | NA | 460,000 | 130,000 | 67,000 | 74,000 | ND | NA | NA | NA | NA | NA | NA | NA |
| SB-1 (PM) | 12/18/14 | 11-12' | 830 | 460 | 4,300 | 7,800 | <50 | <20 | <50 | 290 | NA | NA | NA | 720 | 1,200 | 4,400 | 930 | 1,100 | <250 | NA | 37,000 | NA | NA | NA | NA | NA | NA |
| SB-1 (ECT) | | | 4,100 | 5,100 | 5,100 | 18,600 | NA | NA | NA | 370 | NA | NA | <260 | 1,400 | NA | 9,600 | 2,700 | 1,700 | <1,300 | ND | NA | NA | NA | NA | NA | NA | NA |
| SB-1 (PM) | 12/18/14 | 19-20' | <50 | <50 | <50 | <150 | <50 | <20 | <50 | <50 | NA | NA | NA | <50 | <50 | <50 | <50 | <250 | <250 | NA | NA | NA | NA | NA | NA | NA | NA |
| SB-1 (ECT) | | | <71 | <71 | <71 | <140 | NA | NA | NA | <71 | NA | NA | <71 | <71 | <71 | <71 | <71 | <360 | <360 | ND | NA | NA | NA | NA | NA | NA | NA |
| SB-2 | 12/18/14 | 9-10' | 56,000 | 520,000 | 200,000 | 1,000,000 | <2500 | <1000 | <2500 | 23,000 | NA | NA | NA | 77,000 | 150,000 | 510,000 | 150,000 | 68,000 | 57,000 | NA | 4,900,000 | NA | NA | NA | NA | NA | NA |
| SB-2 | 12/18/14 | 10-11' | 960 | 960 | 1,300 | 4,900 | <50 | <20 | <50 | 310 | NA | NA | NA | 1,000 | 1,100 | 3,300 | 900 | 1,500 | 1,200 | NA | 46,000 | NA | NA | NA | NA | NA | NA |
| SB-2 | 12/18/14 | 19-20' | <50 | 77 | 58 | 240 | <50 | <20 | <50 | <50 | NA | A | NA | <50 | 58 | 170 | 55 | <250 | <250 | NA | NA | NA | NA | NA | NA | NA | NA |
| SB-3 (PM) | 12/18/14 | 9-10' | 29,000 | 190,000 | 150,000 | 700,000 | <5000 | <2000 | <5000 | 19,000 | NA | NA | NA | 53,000 | 120,000 | 410,000 | 120,000 | 57,000 | 48,000 | NA | 5,700,000 | NA | NA | NA | NA | NA | NA |
| SB-3 (PM) | 12/18/14 | 10-11' | 2,700 | 680 | 980 | 1,300 | <50 | <20 | <50 | 150 | NA | NA | NA | 470 | 250 | 440 | 140 | 990 | 680 | NA | 16,000 | NA | NA | NA | NA | NA | NA |
| SB-3 (ECT) | 12/18/14 | 19-20' | <72 | <72 | <72 | <140 | NA | NA | NA | <72 | NA | NA | <72 | <72 | <72 | <72 | <72 | <360 | <360 | ND | NA | NA | NA | NA | NA | NA | NA |
| SB-4 (PM) | 12/18/14 | 9-10' | <50 | <50 | 480 | 1,300 | <50 | <20 | <50 | 250 | NA | NA | NA | 1,300 | 1,100 | 6,500 | 3,000 | 620 | 4,500 | NA | 110,000 | NA | NA | NA | NA | NA | NA |
| A-2 (Co-located SB-4) | | | <50 | <50 | 630 | 1,500 | <50 | <20 | <50 | 310 | NA | NA | NA | 1,500 | 1,100 | 7,000 | 3,400 | 630 | 4,300 | NA | NA | NA | NA | NA | NA | NA | NA |
| SB-4 (ECT) | | | <130 | <130 | 1,300 | 3,200 | NA | NA | NA | 630 | NA | NA | 2,000 | 3,900 | NA | 17,000 | 8,100 | 1,300 | 14,000 | ND | NA | NA | NA | NA | NA | NA | NA |
| SB-4 (PM) | 12/18/14 | 10-11' | 790 | 450 | 4,300 | 17,000 | <50 | <20 | <50 | 370 | NA | NA | NA | 1,300 | 2,700 | 8,900 | 2,300 | 2,900 | 2,100 | NA | 73,000 | NA | NA | NA | NA | NA | NA |
| SB-4 (ECT) | | | 770 | 1,200 | 4,400 | 20,000 | NA | NA | NA | 370 | NA | NA | 140 | 1,500 | NA | 10,000 | 2,700 | 2,900 | 2,300 | ND | NA | NA | NA | NA | NA | NA | NA |
| SB-4 (ECT) | 12/18/14 | 19-20' | <70 | <70 | <70 | <140 | <70 | <70 | <70 | <70 | NA | NA | <70 | <70 | <70 | <70 | <70 | <350 | <350 | ND | NA | NA | NA | NA | NA | NA | NA |
| SB-5 (PM) | 12/19/14 | 8-9' | <50 | <50 | <50 | <150 | <50 | <20 | <50 | <50 | NA | NA | NA | <50 | <50 | <50 | <50 | <250 | <250 | NA | 5,600 | NA | NA | NA | NA | NA | NA |
| SB-5 (ECT) | | | <64 | <64 | <64 | <140 | <64 | <64 | <64 | <64 | NA | NA | <64 | <64 | <64 | <64 | <64 | <350 | <350 | ND | NA | NA | NA | NA | NA | NA | NA |
| SB-5 (PM) | 12/19/14 | 9-10' | <500 | 26,000 | 38,000 | 180,000 | <500 | <200 | <500 | 7,400 | NA | NA | NA | 26,000 | 43,000 | 160,000 | 48,000 | 19,000 | 20,000 | NA | 1,600,000 | NA | NA | NA | NA | NA | NA |
| SB-5 (ECT) | | | <3,000 | 160,000 | 240,000 | 1,180,000 | NA | NA | NA | 43,000 | NA | NA | 22,000 | 180,000 | NA | 960,000 | 300,000 | 100,000 | 150,000 | ND | NA | NA | NA | NA | NA | NA | NA |
| SB-5 (ECT) | 12/19/14 | 19-20' | <73 | <73 | <73 | <150 | <73 | <73 | <73 | <73 | NA | NA | <73 | <73 | <73 | <73 | <73 | <370 | <370 | ND | NA | NA | NA | NA | NA | NA | NA |
| SB-6 (PM) | 12/19/14 | 9-10' | 2,300 | 25,000 | 18,000 | 100,000 | <500 | <200 | <500 | 9,500 | NA | NA | NA | 9,500 | 19,000 | 66,000 | 19,000 | 11,000 | 10,000 | NA | 590,000 | NA | NA | NA | NA | NA | NA |
| SB-6 (ECT) | | | 5,900 | 58,000 | 32,000 | 178,000 | NA | NA | NA | 3,600 | NA | NA | 1,800 | 16,000 | NA | 100,000 | 29,000 | 21,000 | 20,000 | ND | NA | NA | NA | NA | NA | NA | NA |
| SB-6 (PM) | 12/19/14 | 12-13' | 22,000 | 63,000 | 46,000 | 240,000 | <2500 | <1000 | <2500 | 5,600 | NA | NA | NA | 19,000 | 37,000 | 130,000 | 37,000 | 20,000 | 18,000 | NA | 2,100,000 | NA | NA | NA | NA | NA | NA |
| SB-6 (ECT) | | | 61,000 | 230,000 | 150,000 | 740,000 | NA | NA | NA | 15,000 | NA | NA | 6,900 | 63,000 | NA | 370,000 | 110,000 | 56,000 | 59,000 | ND | NA | NA | NA | NA | NA | NA | NA |
| SB-6 (PM) | 12/19/14 | 19-20' | <50 | <50 | <50 | <150 | <50 | <20 | <50 | <50 | NA | NA | NA | <50 | <50 | 59 | <50 | <250 | <250 | NA | NA | NA | NA | NA | NA | NA | NA |
| SB-6 (ECT) | | | <62 | 110 | 110 | 500 | NA | NA | NA | <62 | NA | NA | <62 | 60 | NA | 330 | 110 | <310 | <310 | ND | NA | NA | NA | NA | NA | NA | NA |
| SB-7 (PM) | 12/19/14 | 10-11' | 2,400 | 24,000 | 19,000 | 95,000 | <1000 | <400 | <1000 | 2,700 | NA | NA | NA | 9,300 | 19,000 | 67,000 | 19,000 | 11,000 | 9,600 | NA | 580,000 | NA | NA | NA | NA | NA | NA |
| SB-7 (ECT) | | | 6,100 | 60,000 | 33,000 | 165,000 | NA | NA | NA | 3,600 | NA | NA | 1,800 | 15,000 | NA | 93,000 | 27,000 | 16,000 | 15,000 | ND | NA | NA | NA | NA | NA | NA | NA |
| SB-7 (PM) | 12/19/14 | 11-12' | 11,000 | 35,000 | 22,000 | 110,000 | <1000 | <400 | <1000 | 2,400 | NA | NA | NA | 7,900 | 14,000 | 50,000 | 15,000 | 7,400 | 6,000 | NA | 620,000 | NA | NA | NA | NA | NA | NA |
| SB-7 (ECT) | | | 5,100 | 7,600 | 2,200 | 11,800 | NA | NA | NA | 140 | NA | NA | <85 | 620 | NA | 4,000 | 1,100 | 1,500 | 1,000 | ND | NA | NA | NA | NA | NA | NA | NA |
| SB-7 (PM) | 12/19/14 | 19-20' | <50 | <50 | <50 | <150 | <50 | <20 | <50 | <50 | NA | NA | NA | <50 | <50 | <50 | <50 | <250 | <250 | NA | NA | NA | NA | NA | NA | NA | NA |
| A-3 (Co-Located SB-7) | | | <50 | <50 | <50 | <150 | <50 | <20 | <50 | <50 | NA | NA | NA | <50 | <50 | <50 | <50 | <250 | <250 | NA | NA | NA | NA | NA | NA | NA | NA |
| SB-7 (ECT) | | | <69 | <69 | <69 | <140 | <69 | <69 | <69 | <69 | NA | NA | <69 | <69 | <69 | <69 | <69 | <340 | <340 | ND | NA | NA | NA | NA | NA | NA | NA |
| SB-8 (PM) | 12/19/14 | 9-10' | 4,400 | 79,000 | 61,000 | 320,000 | <1000 | <400 | <1000 | 8,200 | NA | NA | NA | 28,000 | 53,000 | 190,000 | 54,000 | 26,000 | 22,000 | NA | 1,700,000 | NA | NA | NA | NA | NA | NA |
| SB-8 (ECT) | | | 2,400 | 47,000 | 44,000 | 236,000 | NA | NA | NA | 5,600 | NA | NA | 3,100 | 23,000 | NA | 150,000 | 43,000 | 23,000 | 25,000 | ND | NA | NA | NA | NA | NA | NA | NA |
| SB-8 (PM) | 12/19/14 | 10-11' | 1,800 | 3,400 | 1,400 | 6,800 | <50 | <20 | <50 | 130 | NA | NA | NA | 410 | 820 | 2,800 | 790 | 490 | 330 | NA | 35,000 | NA | NA | NA | NA | NA | NA |
| SB-8 (ECT) | | | 3,100 | 12,000 | 5,100 | 26,000 | NA | NA | NA | 470 | NA | NA | 200 | 2,000 | NA | 12,000 | 3,400 | 2,000 | 1,800 | ND | NA | NA | NA | NA | NA | NA | NA |
| SB-8 (PM) | 12/19/14 | 19-20' | <50 | 280 | 200 | 840 | <50 | <20 | <50 | <50 | NA | NA | NA | 84 | 170 | 590 | 150 | <250 | <250 | NA | NA | NA | NA | NA | NA | NA | NA |
| SB-8 (ECT) | | | 63 | 570 | 340 | 1,600 | NA | NA | NA | <62 | NA | NA | <62 | 180 | NA | 1,100 | 280 | <310 | <310 | ND | NA | NA | NA | NA | NA | NA | NA |
| MS-1 | 4/27/2015 | 3' | <50 | 66 | <50 | 350 | <50 | <50 | <50 | <50 | NA | NA | NA | <50 | 370 | 600 | 260 | 360 | <250 | NA | NA | NA | NA | NA | NA | NA | NA |
| SB-9 | 09/17/15 | 7'-8' | <50 | <50 | <50 | <150 | <50 | <20 | <50 | <50 | NA | NA | NA | <50 | <50 | <50 | <50 | <250 | <250 | NA | <4,000 | NA | NA | NA | NA | NA | NA |
| SB-10 | 09/15/15 | 2'-3' | <50 | <50 | <50 | <150 | <50 | <20 | <50 | <50 | NA | NA | NA | <50 | <50 | <50 | <50 | <250 | <250 | NA | <4,000 | NA | NA | NA | NA | NA | NA |
| SB-10 | 09/16/15 | 9'-10' | <50 | <50 | <50 | <150 | <50 | <20 | <50 | <50 | NA | NA | NA | <50 | <50 | <50 | <50 | <250 | <250 | NA | <4,000 | NA | NA | NA | NA | NA | NA |
| SB-11 | 09/16/15 | 7'-8' | <50 | <50 | <50 | <150 | <50 | <20 | <50 | <50 | NA | NA | NA | <50 | <50 | <50 | <50 | <250 | <250 | NA | <4,000 | NA | NA | NA | NA | NA | NA |
| SB-12 | 09/17/15 | 7'-8' | <50 | <50 | <50 | <150 | <50 | <20 | <50 | <50 | NA | NA | NA | <50 | <50 | <50 | <50 | <250 | <250 | NA | <4,000 | NA | NA | NA | NA | NA | NA |
| SB-13 | 09/15/15 | 15'-16' | 8,500 | 28,000 | 46,000 | 200,000 | <1,000 | 5,200 | 5,300 | 28,000 | NA | NA | NA | 11,000 | 35,000 | 120,000 | 40,000 | 20,000 | 30,000 | NA | 690,000 | NA | NA | NA | NA | NA | NA |
| SB-13 | 09/15/15 | 19'-20' | <50 | <50 | <50 | 190 | <50 | <20 | <50 | <50 | NA | NA | NA | <50 | <50 | 110 | <50 | <250 | 290 | NA | <4,000 | NA | NA | NA | NA | NA | NA |
| SB-14 | 09/14/15 | 7'-8' | 280 | 2,500 | 1,900 | 11,000 | <50 | <20 | <50 | 220 | NA | NA | NA | 990 | 2,400 | 7,100 | 2,000 | 1,900 | 3,200 | NA | 52,000 | NA | NA | NA | NA | NA | NA |
| SB-14 | 09/14/15 | 9'-10' | 2,900 | 60,000 | 53,000 | 290,000 | <1,000 | <400 | <1,000 | 6,700 | NA | NA | NA | 29,000 | 62,000 | 190,000 | 55,000 | 28,000 | 46,000 | NA | 2,100,000 | NA | NA | NA | NA | NA | NA |
| SB-14 | 09/14/15 | 14'-15' | <50 | <50 | <50 | <150 | <50 | <20 | <50 | <50 | NA | NA | NA | <50 | <50 | <50 | <50 | <250 | <250 | NA | <4,000 | NA | NA | NA | NA | NA | NA |
| SB-15 | 09/14/15 | 2'-3' | 130 | 180 | 200 | 610 | <50 | <20 | <50 | <50 | NA | NA | NA | 82 | 53 | 230 | 67 | <250 | <250 | NA | 4,000 | NA | NA | NA | NA | NA | NA |
| SB-15 | 09/14/15 | 8'-9' | 16,000 | 230,000 | 130,000 | 670,000 | <15,000 | <6000 | <15,000 | 15,000 | NA | NA | NA | 59,000 | 110,000 | 370,000 | 110,000 | <75,000 | 150,000 | NA | 4,300,000 | NA | NA | NA | NA | NA | NA |
| SB-15 | 09/14/15 | 19'-20' | <50 | <50 | <50 | <150 | <50 | <20 | <50 | <50 | NA | NA | NA | <50 | <50 | 100 | <50 | <250 | <250 | NA | <4,000 | NA | NA | NA | NA | NA | NA |
| SB-16 | 09/14/15 | 6'-7' | 200 | <50 | <50 | 260 | <50 | <20 | <50 | <50 | NA | NA | NA | <50 | <50 | <50 | <50 | <250 | <250 | NA | <4,000 | NA | NA | NA | NA | NA | NA |
| SB-16 | 09/15/15 | 12'-13' | 54 | <50 | <50 | <150 | <50 | <20 | <50 | <50 | NA | NA | NA | <50 | <50 | <50 | <50 | <250 | <250 | NA | <4,000 | NA | NA | NA | NA | NA | NA |
| SB-17 | 09/14/15 | 6'-7' | <50 | <50 | <50 | <150 | <50 | <20 | <50 | <50 | NA | NA | NA | <50 | <50 | <50 | <50 | <250 | <250 | NA | <4,000 | NA | NA | NA | NA | NA | NA |
| SB-18 | 09/16/15 | 7'-8' | <50 | <50 | <50 | <150 | <50 | <20 | <50 | <50 | NA | NA | NA | <50 | <50 | <50 | <50 | <250 | <250 | NA | <4,000 | NA | NA | NA | NA | NA | NA |
| SB-19 | 01/14/16 | 6'-7' | <50 | <50 | <50 | <150 | <50 | <20 | <50 | <50 | NA | NA | NA | <50 | <50 | <50 | <50 | <250 | <250 | NA | <4,000 | NA | NA | NA | NA | NA | NA |
| SB-19 | 01/14/16 | 19'-20' | <50 | <50 | <50 | <150 | <50 | <20 | <50 | <50 | NA | NA | NA | <50 | <50 | <50 | <50 | <250 | <250 | NA | <4,000 | NA | NA | NA | NA | NA | NA |
| SB-20 | 01/12/16 | 8'-9' | <50 | <50 | <50 | <150 | <50 | <20 | <50 | <50 | NA | NA | NA | <50 | <50 | <50 | <50 | <250 | <250 | NA | <4,000 | NA | NA | NA | NA | NA | NA |
| SB-22 | 01/12/16 | 4'-5' | <50 | <50 | <50 | <150 | <50 | <20 | <50 | <50 | NA | NA | NA | <50 | <50 | <50 | <50 | <250 | <250 | NA | <4,000 | NA | NA | NA | NA | NA | NA |
| SB-21 | 01/14/16 | 7'-8' | <50 | <50 | <50 | <150 | <50 | <20 | <50 | <50 | NA | NA | NA | <50 | <50 | <50 | <50 | <250 | <250 | NA | <4,000 | NA | NA | NA | NA | NA | NA |
| A-2 (Co-Locate SB-21) | 01/14/16 | | <50 | <50 | <50 | <150 | <50 | <20 | <50 | <50 | NA | NA | NA | <50 | <50 | <50 | <50 | <250 | <250 | NA | <4,000 | NA | NA | NA | NA | NA | NA |
| SG-14 (SB) | 01/12/16 | 6'-7' | <50 | <50 | <50 | <150 | <50 | <20 | <50 | <50 | NA | NA | NA | <50 | <50 | <50 | <50 | <250 | <250 | NA | <4,000 | NA | NA | NA | NA | NA | NA |

Cleanup Criteria Requirements for Response Activity (R 299.1 - R 299.50)
Generic Soil Cleanup Criteria Tables 2 and 3: Residential and Non-Residential Part 201 Generic Cleanup Criteria and Screening Levels/Part 213 Risk-Based Screening Levels, December 30, 2013
MDEQ Guidance Document For The Vapor Intrusion Pathway, Policy and Procedure Number: 09-017, Appendix D Vapor Intrusion Screening Values, May 2013

| Criterion | Benzene | Toluene | Ethylbenzene | Xylenes | MTBE | EDB | 1,2-Dichloroethane | Isopropyl benzene | p-Isopropyltoluene | n-Butylbenzene | Sec-butylbenzene | n-Propylbenzene | 1,2,3-Trimethylbenzene | 1,2,4-Trimethylbenzene | 1,3,5-Trimethylbenzene | Naphthalene | 2-Methylnaphthalene | Other VOCs | Gasoline Range Organics | Acenaphthene | 2-Methylnaphthalene | Naphthalene | Phenanthrene | Pyrene | Other PNAs |
|---|---|---|---|---|---|---|---|---|---|---|---|---|---|---|---|---|---|---|---|---|---|---|---|---|---|
| **Residential (µg/Kg)** | | | | | | | | | | | | | | | | | | | | | | | | | |
| Statewide Default Background Levels | NA | NA | NA | NA | NA | NA | NA | NA | NA | NA | NA | NA | NA | NA | NA | NA | NA | NA | NA | NA | NA | NA | NA | NA | NA |
| Drinking Water Protection (Res DWP) | 100 | 16,000 | 1,600 | 5,600 | 800 | 20 (M) | 100 | 1,600 | NL | 1,600 | 1,600 | 91,000 | 1,800 | 2,100 | 1,800 | 35,000 | 57,000 | Various | NA | 3.00E+05 | 57,000 | 35,000 | 56,000 | 4.80E+05 | Various |
| Groundwater Surface Water Interface Protection (GSIP) | 4,000 (X) | 5,400 | 360 | 820 | 1.40E+05 (X) | 110 (X) | 7,200 (X) | ID | NL | ID | ID | 3,200 | 570 | 570 | 1,100 | 730 | 4,200 | Various | NA | 8,700 | 4,200 | 730 | 2,100 | ID | Various |
| Soil Volatilization to Indoor Air Inhalation (Res SVII) | 1,600 | 3.3E+05 (C) | 87,000 | 6.3E+06 (C) | 9.8E+06 (C) | 670 | 2,100 | ID | NL | ID | ID | 4.0E+05 (C) | 2.6E+06 (C) | 4.3E+06 (C) | 2.6E+06 (C) | 2.50E+05 | 2.70E+06 | Various | 350,000* | 1.8E+08 | 2.70E+06 | 2.50E+05 | 2.8E+08 | 1.0E+9 (D) | Various |
| Ambient Air Infinite Source Volatile Soil Inhalation (Res VSI) | 13,000 | 2.80E+06 | 7.20E+05 | 4.60E+07 | 2.50E+07 | 1,700 | 8,200 | ID | NL | ID | ID | 1.70E+06 | 1.60E+07 | 2.10E+07 | 1.60E+07 | 3.00E+05 | 1.50E+06 | Various | NA | 8.1E+07 | 1.50E+06 | 3.00E+05 | 1.60E+05 | 6.5E+08 | Various |
| Ambient Air Finite VSI for 5 Meter Source Thickness | 34,000 | 5.10E+06 | 1.00E+06 | 6.10E+07 | 3.00E+07 | 1,700 | 11,000 | ID | NL | ID | ID | 1.70E+06 | 3.80E+08 | 5.00E+08 | 3.80E+08 | 3.00E+05 | 1.50E+06 | Various | NA | 8.1E+07 | 1.50E+06 | 3.00E+05 | 1.60E+05 | 6.5E+08 | Various |
| Ambient Air Finite VSI for 2 Meter Source Thickness | 79,000 | 1.20E+07 | 2.20E+06 | 1.30E+08 | 8.70E+07 | 3,300 | 26,000 | ID | NL | ID | ID | 2.80E+06 | 3.80E+08 | 5.00E+08 | 3.80E+08 | 3.00E+05 | 1.50E+06 | Various | NA | 8.1E+07 | 1.50E+06 | 3.00E+05 | 1.60E+05 | 6.5E+08 | Various |
| Ambient Air Particulate Soil Inhalation (Res PSI) | 3.80E+08 | 2.70E+10 | 1.00E+10 | 2.90E+11 | 2.00E+11 | 1.40E+07 | 1.20E+08 | 1.30E+09 | NL | 2.00E+09 | 4.00E+08 | 5.80E+09 | 8.20E+10 | 8.20E+10 | 8.20E+10 | 2.00E+08 | 6.70E+08 | Various | NA | 1.4E+10 | 6.70E+08 | 2.0E+08 | 6.7E+08 | 8.7E+09 | Various |
| Direct Contact (Res DC) | 1.80E+05 | 5.0E+07 (C) | 2.2E+07 (C) | 4.1E+08 (C) | 1.50E+06 | 92 | 91,000 | 2.50E+06 | NL | 2.50E+06 | 2.50E+06 | 2.5E+07 (C) | 3.2E+07 (C) | 3.2E+07 (C) | 3.2E+07 (C) | 1.60E+07 | 8.10E+06 | Various | 900,000* | 4.1E+07 | 8.10E+06 | 1.6E+07 | 1.6E+06 | 2.9E+07 | Various |
| **Nonresidential (µg/Kg)** | | | | | | | | | | | | | | | | | | | | | | | | | |
| Drinking Water Protection (Nonres DWP) | 100 | 16,000 | 1,500 | 5,600 | 800 | 20 (M) | 100 | 4,600 | NL | 4,600 | 4,600 | 2.80E+05 | 1,800 | 2,100 | 1,800 | 1.00E+05 | 1.70E+05 | Various | NA | 8.80E+05 | 1.70E+05 | 1.00E+05 | 1.60E+05 | 4.80E+05 | Various |
| Soil Volatilization to Indoor Air Inhalation (Nonres SVII) | 8,400 | 6.1E+05 (C) | 4.6E+05 (C) | 1.2E+07 (C) | 1.8E+07 (C) | 3,600 | 11,000 | ID | NL | ID | ID | 7.3E+05 (C) | 4.8E+06 (C) | 8.0E+06 (C) | 4.8E+06 (C) | 4.70E+05 | 4.90E+06 | Various | NA | 3.5E+08 | 4.90E+06 | 4.70E+05 | 5.1E+06 | 1.0E+9 (D) | Various |
| Ambient Air Infinite Source Volatile Soil Inhalation (Nonres VSI) | 45,000 | 3.30E+06 | 2.40E+06 | 5.40E+07 | 3.00E+07 | 5,800 | 21,000 | ID | NL | ID | ID | 2.00E+06 | 1.90E+07 | 2.50E+07 | 1.90E+07 | 3.50E+05 | 1.80E+06 | Various | NA | 9.7E+07 | 1.80E+06 | 3.50E+05 | 1.90E+05 | 7.8E+08 | Various |
| Ambient Air Finite VSI for 5 Meter Source Thickness | 99,000 | 3.60E+07 | 3.10E+06 | 8.60E+07 | 4.10E+07 | 5,800 | 33,000 | ID | NL | ID | ID | 2.00E+06 | 4.60E+08 | 6.00E+08 | 4.60E+08 | 3.50E+05 | 1.80E+06 | Various | NA | 9.7E+07 | 1.80E+06 | 3.50E+05 | 1.90E+05 | 7.8E+08 | Various |
| Ambient Air Finite VSI for 2 Meter Source Thickness | 2.30E+05 | 9.60E+07 | 6.50E+06 | 1.30E+08 | 9.30E+07 | 9,800 | 74,000 | ID | NL | ID | ID | 3.00E+06 | 4.60E+08 | 6.00E+08 | 4.60E+08 | 3.50E+05 | 1.80E+06 | Various | NA | 9.7E+07 | 1.80E+06 | 3.50E+05 | 1.90E+05 | 7.8E+08 | Various |
| Ambient Air Particulate Soil Inhalation (Nonres PSI) | 4.70E+08 | 1.20E+10 | 1.30E+10 | 1.30E+11 | 8.80E+10 | 1.80E+07 | 1.50E+08 | 6.90E+08 | NL | ID | ID | 2.50E+09 | 3.60E+10 | 3.60E+10 | 3.60E+10 | 8.80E+07 | 2.90E+08 | Various | NA | 6.2E+09 | 2.90E+08 | 8.8E+07 | 2.9E+08 | 2.9E+09 | Various |
| Direct Contact (Nonres DC) | 8.40E+05 (C) | 1.6E+08 (C) | 7.1E+07 (C) | 1.0E+09 (C) | 7.1E+06 (C) | 430 | 4.20E+05 | 8.00E+06 | NL | 8.00E+06 | 8.00E+06 | 8.0E+07 (C) | 1.0E+08 (C) | 1.0E+08 (C) | 1.0E+08 (C) | 5.20E+07 | 2.60E+07 | Various | NA | 1.3E+08 | 2.60E+07 | 5.2E+07 | 5.2E+06 | 8.4E+07 | Various |
| **Screening Levels (µg/Kg)** | | | | | | | | | | | | | | | | | | | | | | | | | |
| Soil Saturation Concentration Screening Levels (Csat) | 4.00E+05 | 2.50E+05 | 1.40E+05 | 1.50E+05 | 5.90E+06 | 8.90E+05 | 1.20E+06 | 3.90E+05 | NL | 1.00E+07 | 1.00E+07 | 1.00E+07 | 94,000 | 1.10E+05 | 84,000 | NA | NA | NA | 250,000* | NA | NA | NA | NA | NA | NA |
| Residential Vapor Intrusion Soil Screening Levels ($S_{VI-res}$) | <u>50</u> | <u>10,000</u> | <u>200</u> | <u>280</u> | 14,000 | 20 | 59 | <u>250</u> | NL | 450 | <u>50</u> | <u>140</u> | <u>3,200</u> | <u>2,200</u> | <u>1,700</u> | <u>440</u> | <u>7,500</u> | Various | NA | 4.32E+05 | 7,500 | 440 | 5,100 | 6.47E+07 | Various |
| Nonresidential Vapor Intrusion Soil Screening Levels ($S_{VI-nr}$) | <u>84.5</u> | <u>1.69E+05</u> | <u>4,600</u> | <u>4,800</u> | 2.38E+05 | 20 | 83.7 | <u>300</u> | NL | 7,600 | <u>740</u> | <u>2,400</u> | <u>53,000</u> | <u>37,000</u> | <u>28,000</u> | <u>8,900</u> | <u>1.26E+05</u> | Various | NA | 7.26E+06 | 1.26E+05 | 8,900 | 86,000 | 1.09E+09 | Various |

[box] Applicable Criterion/RBSL Exceeded
BOLD Value Exceeds Applicable Criterion/RBSL
[shaded] Value Exceeds Soil Csat, LNAPL, and/or VISL Screening Levels
<u>Underline</u> Screening Level Exceeded
bgs Below Ground Surface (feet)
1 1,2,3-Trimethylbenzene RBSLs based on the more restrictive of 1,2,4-trimethylbenzene and 1,3,5-trimethylbenzene.
2 Maximum of analyzed or calculated total lead value.
ND Non-detected at levels above laboratory method detection limit (MDL)
NA Not Applicable/Not Analyzed
NL Not Listed
NLL Not Likely to Leach
NLV Not Likely to Volatilize
ID Insufficient Data
(ECT) Split sampled collected by Environmental Consulting and Technology, Inc. on behalf of the Michigan Department of Environmental Quality (MDEQ).
* MDEQ LNAPL Screening Level above which Residual LNAPL is assumed to be present, or above which the Tier 1 Soil Volatilization to Indoor Air Inhalation (SVII) and/or Direct Contact (DC) Risk-Based Screening Levels (RBSLs) no longer apply.

TABLE 1 (2 OF 2)
SUMMARY OF SOIL ANALYTICAL RESULTS
GASOLINE VOCs,GASOLINE RANGE ORGANICS, and PNAs
110 EAST BROAD STREET, LINDEN, MICHIGAN
PM PROJECT # 01-4982-0-002

| Volatile Organic Compounds (VOCs), Gasoline Range Organics (GRO), and Polynuclear Aromatic Compounds (PNAs) (µg/Kg) | | | Benzene | Toluene | Ethylbenzene | Xylenes | Methyl-tert-butyl ether (MTBE) | Ethylene dibromide (EDB) (1,2-Dibromoethane) | 1,2-Dichloroethane | Isopropyl benzene | p-Isopropyltoluene | n-Butylbenzene | Sec-butylbenzene | n-Propylbenzene | 1,2,3-Trimethylbenzene[1] | 1,2,4-Trimethylbenzene | 1,3,5-Trimethylbenzene | Naphthalene | 2-Methylnaphthalene | Other VOCs | Gasoline Range Organics | Acenaphthene | 2-Methylnaphthalene | Naphthalene | Phenanthrene | Pyrene | Other PNAs |
|---|---|---|---|---|---|---|---|---|---|---|---|---|---|---|---|---|---|---|---|---|---|---|---|---|---|---|---|
| Chemical Abstract Service Number (CAS#) | | | 71432 | 108883 | 100414 | 1330207 | 1634044 | 106934 | 107062 | 98828 | 99876 | 104518 | 135988 | 103651 | 526738 | 95636 | 108678 | 91203 | 91576 | Various | | 83329 | 91576 | 91203 | 85018 | 129000 | Various |
| Sample ID | Sample Date | Sample Depth (feet bgs) | VOCs | | | | | | | | | | | | | | | | | | GRO | PNAs | | | | | |
| Atwell, LLC Samples - 2012 Subsurface Investigation | | | | | | | | | | | | | | | | | | | | | | | | | | | |
| AB-2 | 10/17/12 | 10.5' | ND | ND | 25,000 | 36,000 | ND | ND | NA | 5,200 | NA | 3,500 | ND | 24,000 | NA | 180,000 | 65,000 | ND | ND | NA | NA | ND | 2,800 | 6,100 | ND | ND | NA |
| AB-4 | 10/17/12 | 8' | 2,000 | 11,000 | 12,000 | 60,000 | ND | ND | NA | 15,000 | NA | 2,200 | ND | 6,800 | NA | 48,000 | 15,000 | ND | ND | NA | NA | ND | 4,100 | 8,300 | 1,100 | 720 | NA |
| AB-5 | 10/17/12 | 9' | ND | ND | ND | ND | ND | ND | NA | ND | NA | ND | ND | ND | NA | ND | ND | ND | ND | NA | NA | ND | ND | ND | ND | ND | NA |
| AB-6 | 10/17/12 | 10' | 1,300 | 2,000 | 41,000 | 240,000 | ND | ND | NA | 7,600 | NA | 9,600 | ND | 32,000 | NA | 180,000 | 69,000 | ND | ND | NA | NA | ND | 3,400 | 6,900 | ND | ND | NA |
| ECT Samples - MDEQ 2014 Subsurface Investigation | | | | | | | | | | | | | | | | | | | | | | | | | | | |
| GP-1 | 07/30/14 | 8.5-9.0' | <61 | <61 | <61 | <181 | <61 | <61 | <61 | <61 | <61 | <61 | <61 | <61 | <61 | <61 | <61 | <300 | <300 | ND | NA | <220 | <550 | <220 | <220 | <220 | ND |
| GP-1 | 07/30/14 | 13.0' | <61 | <61 | <61 | <181 | <61 | <61 | <61 | <61 | <61 | <61 | <61 | <61 | <61 | <61 | <61 | <310 | <310 | ND | NA | <220 | <550 | <220 | <220 | <220 | ND |
| GP-2 | 07/30/14 | 9.0-10.0' | 1,500 | <61 | 370 | <181 | <61 | <61 | <61 | <61 | <61 | <61 | <61 | 110 | 93 | <61 | <61 | <310 | <310 | ND | NA | NA | NA | NA | NA | NA | NA |
| GP-2 | 07/30/14 | 14.0' | <59 | <59 | <59 | <179 | <59 | <59 | <59 | <59 | <59 | <59 | <59 | <59 | <59 | <59 | <59 | <300 | <300 | ND | NA | NA | NA | NA | NA | NA | NA |
| GP-3 | 07/30/14 | 7.0-8.0' | 940 | 2,900 | 13,000 | 253,000 | <110 | <110 | <110 | 2,600 | <110 | <110 | <110 | 9,000 | 35,000 | 150,000 | 45,000 | 21,000 | 21,000 | ND | NA | <210 | 11,000 | 9,200 | <210 | <210 | ND |
| GP-3 | 07/30/14 | 15.0' | <60 | 120 | 130 | 1,210 | <60 | <60 | <60 | <60 | <60 | <60 | <60 | 79 | 130 | 620 | 190 | <300 | <300 | ND | NA | <220 | <550 | <220 | <220 | <220 | ND |
| GP-4 | 07/30/14 | 9.0' | <67 | <67 | <67 | <197 | <67 | <67 | <67 | <67 | <67 | <67 | <67 | <67 | <67 | <67 | <67 | <330 | <330 | ND | NA | NA | NA | NA | NA | NA | NA |
| GP-5 | 07/30/14 | 8.0' | <60 | <60 | <60 | <180 | <60 | <60 | <60 | <60 | <60 | <60 | <60 | <60 | <60 | <60 | <60 | <300 | <300 | ND | NA | NA | NA | NA | NA | NA | NA |
| GP-5 | 07/30/14 | 13.0' | <61 | <61 | <61 | <181 | <61 | <61 | <61 | <61 | <61 | <61 | <61 | <61 | <61 | <61 | <61 | <310 | <310 | ND | NA | NA | NA | NA | NA | NA | NA |
| GP-6 | 07/30/14 | 8.0' | <60 | <60 | <60 | <180 | <60 | <60 | <60 | <60 | <60 | <60 | <60 | <60 | <60 | <60 | <60 | <300 | <300 | ND | NA | NA | NA | NA | NA | NA | NA |
| GP-6 | 07/30/14 | 10.0' | <61 | <61 | <61 | <181 | <61 | <61 | <61 | <61 | <61 | <61 | <61 | <61 | <61 | <61 | <61 | <300 | <300 | ND | NA | <220 | <550 | <220 | <220 | <220 | ND |
| GP-7 | 07/31/14 | 9.0' | 1,100 | <67 | 80 | <197 | <67 | <67 | <67 | <67 | <67 | <67 | <67 | <67 | <67 | <67 | <67 | <330 | <330 | ND | NA | <230 | <580 | <230 | <230 | <220 | ND |
| GP-7 | 07/31/14 | 15.0' | <62 | <62 | <62 | <182 | <62 | <62 | <62 | <62 | <62 | <62 | <62 | <62 | <62 | <62 | <62 | <310 | <310 | ND | NA | <220 | <560 | <220 | <220 | <220 | ND |
| GP-8 | 07/31/14 | 9.0' | <60 | <60 | <60 | <180 | <60 | <60 | <60 | <60 | <60 | <60 | <60 | <60 | <60 | <60 | <60 | <300 | <300 | ND | NA | NA | NA | NA | NA | NA | NA |
| GP-9 | 07/31/14 | 9.5' | 4,800 | 9,600 | 12,000 | 67,000 | <68 | <68 | <68 | 1,800 | <68 | <68 | <68 | 6,800 | 8,500 | 45,000 | 10,000 | 8,900 | 8,100 | ND | NA | <240 | 1,300 | 1,100 | <240 | <240 | ND |
| GP-10 | 07/31/14 | 5.0-6.0' | 530 | 80 | 730 | 3,070 | <64 | <64 | <64 | 61 | <64 | <64 | <64 | 280 | 320 | 1,600 | 440 | <320 | <320 | ND | NA | <230 | <570 | <230 | <230 | <230 | ND |
| GP-10 | 07/31/14 | 10.0' | 22,000 | 220,000 | 80,000 | 480,000 | <550 | <550 | <550 | 8,100 | <550 | <550 | <550 | 35,000 | 42,000 | 230,000 | 53,000 | 30,000 | 27,000 | ND | NA | NA | NA | NA | NA | NA | NA |
| GP-11 | 07/31/14 | 10.0' | 1,100 | 2,700 | 3,000 | 14,000 | <59 | <59 | <59 | 360 | <59 | <59 | <59 | 1,700 | 2,500 | 10,000 | 3,000 | 2,400 | 3,000 | ND | NA | NA | NA | NA | NA | NA | NA |
| GP-12 | 07/31/14 | 10.0' | <71 | <71 | <71 | 221 | <71 | <71 | <71 | <71 | <71 | <71 | <71 | <71 | <71 | 400 | 170 | <350 | <350 | ND | NA | NA | NA | NA | NA | NA | NA |
| GP-13 | 08/01/14 | 14.5' | <69 | <69 | <69 | <209 | <69 | <69 | <69 | <69 | <69 | <69 | <69 | <69 | <69 | <69 | <69 | <350 | <350 | ND | NA | <240 | <610 | <240 | <240 | <240 | ND |
| GP-14 | 08/01/14 | 10.0' | 31,000 | 290,000 | 110,000 | 840,000 | <2600 | <2600 | <2600 | 10,000 | <2600 | <2600 | <2600 | 44,000 | 55,000 | 240,000 | 71,000 | 39,000 | 33,000 | ND | NA | <230 | 17,000 | 13,000 | <230 | <230 | ND |
| GP-15 | 08/01/14 | 10.0' | 67,000 | 400,000 | 140,000 | 690,000 | <2500 | <2500 | <2500 | 13,000 | <2500 | <2500 | <2500 | 66,000 | 71,000 | 300,000 | 92,000 | 50,000 | 45,000 | ND | NA | 280 | 70,000 | 66,000 | 510 | <230 | ND |
| GP-15 | 08/01/14 | 17.0' | <62 | <62 | <62 | <182 | <62 | <62 | <62 | <62 | <62 | <62 | <62 | <62 | <62 | <62 | <62 | <310 | <310 | ND | NA | <220 | <550 | <220 | <220 | <220 | ND |
| GP-16 | 08/01/14 | 10.0' | <61 | <61 | <61 | <181 | <61 | <61 | <61 | <61 | <61 | <61 | <61 | <61 | <61 | <61 | <61 | <300 | <300 | ND | NA | <220 | <550 | <220 | <220 | <220 | ND |
| GP-17 | 08/01/14 | 9.5' | 2,800 | 14,000 | 4,400 | 21,100 | <66 | <66 | <66 | 400 | <66 | <66 | <66 | 1,700 | 2,200 | 9,400 | 2,800 | 1,800 | 1,700 | ND | NA | <230 | 24,000 | 23,000 | 260 | <230 | ND |
| GP-18 | 08/01/14 | 9.0-10.0' | <62 | <62 | <62 | <182 | <62 | <62 | <62 | <62 | <62 | <62 | <62 | <62 | <62 | <62 | <62 | <310 | <310 | ND | NA | <220 | <560 | <220 | <220 | <220 | ND |
| GP-18 | 08/01/14 | 15.0' | <57 | <57 | <57 | <167 | <57 | <57 | <57 | <57 | <57 | <57 | <57 | <57 | <57 | <57 | <57 | <290 | <290 | ND | NA | <220 | <540 | <220 | <220 | <220 | ND |
| GP-19 | 08/01/14 | 9.0' | <62 | <62 | <62 | <182 | <62 | <62 | <62 | <62 | <62 | <62 | <62 | <62 | <62 | <62 | <62 | <310 | <310 | ND | NA | <110 | <280 | <110 | <110 | <110 | ND |
| GP-20 | 08/01/14 | 9.0' | <69 | <69 | <69 | <209 | <69 | <69 | <69 | <69 | <69 | <69 | <69 | <69 | <69 | <69 | <69 | <350 | <350 | ND | NA | NA | NA | NA | NA | NA | NA |
| MDEQ Samples - MDEQ 2015 Subsurface Investigation | | | | | | | | | | | | | | | | | | | | | | | | | | | |
| GP-15-16 | 11/12/2015 | 9.25-9.5 | <71 | <71 | <71 | <211 | <71 | <71 | <71 | <71 | <71 | <71 | <71 | <71 | <71 | <71 | <71 | <350 | <350 | ND | NA | NA | NA | NA | NA | NA | NA |
| GP-15-17 | 11/12/2015 | 7.5-8.0 | <2,600 | <2,600 | 13,000 | 187,000 | <2,600 | <2,600 | <2,600 | 3,500 | 5,900 | <2,600 | 4,600 | 15,000 | 110,000 | 420,000 | 150,000 | 52,000 | 100,000 | ND | NA | NA | NA | NA | NA | NA | NA |
| GP-15-18 | 11/12/2015 | 9.25-9.5 | <61 | <61 | <61 | <181 | <61 | <61 | <61 | <61 | <61 | <61 | <61 | <61 | <61 | <61 | <61 | <300 | <300 | ND | NA | NA | NA | NA | NA | NA | NA |
| GP-15-19 | 11/12/2015 | 9.5-9.75 | <63 | <63 | <63 | <193 | <63 | <63 | <63 | <63 | <63 | <63 | <63 | <63 | <63 | <63 | <63 | <320 | <320 | ND | NA | NA | NA | NA | NA | NA | NA |
| GP-15-20 | 11/12/2015 | 9.0-9.5 | <1,200 | <1,200 | 18,000 | 107,600 | <1,200 | <1,200 | <1,200 | 2,800 | <1,200 | <1,200 | <1,200 | 12,000 | 20,000 | 96,000 | 28,000 | 6,400 | <6,200 | ND | NA | NA | NA | NA | NA | NA | NA |
| GP-15-15 | 11/11/2015 | 9.0-9.5 | <67 | <67 | <67 | <197 | <67 | <67 | <67 | <67 | <67 | <67 | <67 | <67 | <67 | <67 | <67 | <330 | <330 | ND | NA | NA | NA | NA | NA | NA | NA |
| GP-15-6 | 11/11/2015 | 5.0-5.5 | <66 | <66 | <66 | <196 | <66 | <66 | <66 | <66 | <66 | <66 | <66 | <66 | <66 | <66 | <66 | <330 | <330 | ND | NA | NA | NA | NA | NA | NA | NA |
| GP-15-7 | 11/11/2015 | 4.5-5.0 | <750 | <750 | 2,000 | 21,600 | <750 | <750 | <750 | 990 | 3,800 | <750 | <750 | 1,500 | 15,000 | 35,000 | 15,000 | <3,700 | <3,700 | ND | NA | NA | NA | NA | NA | NA | NA |
| GP-15-8 | 11/11/2015 | 5.0-5.25 | <71 | <71 | <71 | <211 | <71 | <71 | <71 | <71 | <71 | <71 | <71 | <71 | <71 | <71 | <71 | <360 | <360 | ND | NA | NA | NA | NA | NA | NA | NA |
| GP-15-9 | 11/11/2015 | 8.0-8.25 | <290 | <290 | <290 | <880 | <290 | <290 | <290 | <290 | 1,100 | 1,500 | 830 | 340 | 2,200 | 4,100 | 3,600 | <1,500 | 3,600 | ND | NA | NA | NA | NA | NA | NA | NA |
| HA-15-1 | 11/11/2015 | 7.5-8.0 | <77 | <77 | <77 | <227 | <77 | <77 | <77 | <77 | <77 | <77 | <77 | <77 | <77 | 82 | <77 | <390 | <390 | ND | NA | NA | NA | NA | NA | NA | NA |
| GP-15-10 | 11/11/2015 | 8.5-9.0 | <69 | <69 | <69 | <209 | <69 | <69 | <69 | <69 | <69 | <69 | <69 | <69 | <69 | <69 | <69 | <350 | <350 | ND | NA | NA | NA | NA | NA | NA | NA |
| GP-15-11 | 11/11/2015 | 9.0-9.5 | <63 | <63 | <63 | <193 | <63 | <63 | <63 | <63 | <63 | <63 | <63 | <63 | <63 | <63 | <63 | <310 | <310 | ND | NA | NA | NA | NA | NA | NA | NA |
| GP-15-12 | 11/11/2015 | 6.0-6.5 | <63 | <63 | <63 | <193 | <63 | <63 | <63 | <63 | <63 | <63 | <63 | <63 | <63 | <63 | <63 | <320 | <320 | ND | NA | NA | NA | NA | NA | NA | NA |
| GP-15-13 | 11/11/2015 | 9.0-9.5 | <71 | <71 | <71 | <211 | <71 | <71 | <71 | <71 | <71 | <71 | <71 | <71 | <71 | <71 | <71 | <350 | <350 | ND | NA | NA | NA | NA | NA | NA | NA |
| GP-15-14 | 11/11/2015 | 9.5-10.0 | 39,000 | 320,000 | 510,000 | 2,450,000 | <570 | <570 | <570 | 28,000 | 3,600 | <570 | 5,900 | 100,000 | 120,000 | 820,000 | 180,000 | 36,000 | 19,000 | ND | NA | NA | NA | NA | NA | NA | NA |
| GP-15-1 | 11/11/2015 | 10.5-11.0 | <61 | <61 | <61 | <181 | <61 | <61 | <61 | <61 | <61 | <61 | <61 | <61 | <61 | 59 | <61 | <300 | <300 | ND | NA | NA | NA | NA | NA | NA | NA |
| GP-15-2 | 11/11/2015 | 9.5-10.0 | <69 | <69 | <69 | <209 | <69 | <69 | <69 | <69 | <69 | <69 | <69 | <69 | <69 | <69 | <69 | <350 | <350 | ND | NA | NA | NA | NA | NA | NA | NA |
| GP-15-3 | 11/11/2015 | 9.8-10.0 | 670 | 140 | 1,600 | 3,200 | <66 | <66 | <66 | 160 | <66 | <66 | 85 | 690 | 920 | 4,300 | 640 | 1,500 | 1,300 | ND | NA | NA | NA | NA | NA | NA | NA |
| GP-15-4 | 11/11/2015 | 5.5-6.0 | <62 | <62 | 890 | 3,850 | <62 | <62 | <62 | 430 | 290 | <62 | 420 | 2,200 | 3,700 | 20,000 | 3,600 | 1,200 | 2,600 | ND | NA | NA | NA | NA | NA | NA | NA |
| GP-15-5 | 11/11/2015 | 6.0-6.5 | <76 | <76 | <76 | <228 | <76 | <76 | <76 | <76 | <76 | <76 | <76 | <76 | <76 | <76 | <76 | <380 | <380 | ND | NA | NA | NA | NA | NA | NA | NA |

Cleanup Criteria Requirements for Response Activity (R 299.1 - R 299.50)
Generic Soil Cleanup Criteria Tables 2 and 3: Residential and Non-Residential Part 201 Generic Cleanup Criteria and Screening Levels/Part 213 Risk-Based Screening Levels, December 30, 2013
MDEQ Guidance Document For The Vapor Intrusion Pathway, Policy and Procedure Number: 09-017, Appendix D Vapor Intrusion Screening Values, May 2013

| Criteria | Benzene | Toluene | Ethylbenzene | Xylenes | MTBE | EDB | 1,2-Dichloroethane | Isopropyl benzene | p-Isopropyltoluene | n-Butylbenzene | Sec-butylbenzene | n-Propylbenzene | 1,2,3-Trimethylbenzene | 1,2,4-Trimethylbenzene | 1,3,5-Trimethylbenzene | Naphthalene | 2-Methylnaphthalene | Other VOCs | GRO | Acenaphthene | 2-Methylnaphthalene | Naphthalene | Phenanthrene | Pyrene | Other PNAs |
|---|---|---|---|---|---|---|---|---|---|---|---|---|---|---|---|---|---|---|---|---|---|---|---|---|---|
| **Residential (µg/Kg)** | | | | | | | | | | | | | | | | | | | | | | | | | |
| Statewide Default Background Levels | NA | NA | NA | NA | NA | NA | NA | NA | NA | NA | NA | NA | NA | NA | NA | NA | NA | NA | NA | NA | NA | NA | NA | NA | NA |
| Drinking Water Protection (Res DWP) | 100 | 16,000 | 1,500 | 5,600 | 800 | 20 (M) | 100 | 1,800 | NL | 1,600 | 1,600 | 91,000 | 1,800 | 2,100 | 1,800 | 35,000 | 57,000 | Various | NA | 3.00E+05 | 57,000 | 35,000 | 56,000 | 4.80E+05 | Various |
| Groundwater Surface Water Interface Protection (GSIP) | 4,000 (X) | 5,400 | 360 | 820 | 1.40E+05 (X) | 110 (X) | 7,200 (X) | ID | NL | ID | ID | 3,200 | 570 | 570 | 1,100 | 730 | 4,200 | Various | NA | 8,700 | 4,200 | 730 | 2,100 | ID | Various |
| Soil Volatilization to Indoor Air Inhalation (Res SVII) | 1,600 | 3.3E+05 (C) | 87,000 | 6.3E+08 (C) | 9.9E+06 (C) | 670 | 2,100 | ID | NL | ID | ID | 4.0E+05 (C) | 2.6E+08 (C) | 4.3E+06 (C) | 2.6E+06 (C) | 2.50E+05 | 2.70E+06 | Various | 350,000* | 1.9E+08 | 2.70E+06 | 2.50E+05 | 2.8E+06 | 1.0E+9 (D) | Various |
| Ambient Air Infinite Source Volatile Soil Inhalation (Res VSI) | 13,000 | 2.80E+06 | 7.20E+05 | 4.60E+07 | 2.50E+07 | 1,700 | 6,200 | ID | NL | ID | ID | 1.70E+06 | 1.60E+07 | 2.10E+07 | 1.60E+07 | 3.00E+05 | 1.50E+06 | Various | NA | 8.1E+07 | 1.50E+06 | 3.00E+05 | 1.60E+05 | 6.5E+08 | Various |
| Ambient Air Finite VSI for 5 Meter Source Thickness | 34,000 | 5.10E+06 | 1.00E+06 | 8.10E+07 | 3.90E+07 | 1,700 | 11,000 | ID | NL | ID | ID | 1.70E+08 | 3.80E+08 | 5.00E+08 | 3.80E+08 | 3.00E+05 | 1.50E+06 | Various | NA | 8.1E+07 | 1.50E+06 | 3.00E+05 | 1.60E+05 | 6.5E+08 | Various |
| Ambient Air Finite VSI for 2 Meter Source Thickness | 79,000 | 1.20E+07 | 2.20E+06 | 1.30E+08 | 8.70E+07 | 3,300 | 26,000 | ID | NL | ID | ID | 2.80E+08 | 3.80E+08 | 5.00E+08 | 3.80E+08 | 3.00E+05 | 1.50E+06 | Various | NA | 8.1E+07 | 1.50E+06 | 3.00E+05 | 1.60E+05 | 6.5E+08 | Various |
| Ambient Air Particulate Soil Inhalation (Res PSI) | 3.80E+08 | 2.70E+10 | 1.00E+10 | 2.90E+11 | 2.00E+11 | 1.40E+07 | 1.20E+08 | 1.30E+09 | NL | 2.00E+09 | 4.00E+08 | 5.80E+09 | 8.20E+10 | 8.20E+10 | 8.20E+10 | 2.00E+08 | 6.70E+08 | Various | NA | 1.4E+10 | 6.70E+08 | 2.0E+08 | 6.7E+08 | 6.7E+09 | Various |
| Direct Contact (Res DC) | 1.80E+05 | 5.0E+07 (C) | 2.2E+07 (C) | 4.1E+08 (C) | 1.60E+06 | 92 | 91,000 | 2.50E+06 | NL | 2.50E+06 | 2.50E+06 | 2.5E+07 (C) | 3.2E+07 (C) | 3.2E+07 (C) | 3.2E+07 (C) | 1.60E+07 | 8.10E+06 | Various | 900,000* | 4.1E+07 | 8.10E+06 | 1.6E+07 | 1.6E+06 | 2.9E+07 | Various |
| **Nonresidential (µg/Kg)** | | | | | | | | | | | | | | | | | | | | | | | | | |
| Drinking Water Protection (Nonres DWP) | 100 | 16,000 | 1,500 | 5,600 | 800 | 20 (M) | 100 | 4,600 | NL | 4,600 | 4,600 | 2.60E+05 | 1,800 | 2,100 | 1,800 | 1.00E+05 | 1.70E+05 | Various | NA | 8.80E+05 | 1.70E+05 | 1.00E+05 | 1.60E+05 | 4.80E+05 | Various |
| Soil Volatilization to Indoor Air Inhalation (Nonres SVII) | 8,400 | 6.1E+05 (C) | 4.6E+05 (C) | 1.2E+07 (C) | 1.8E+07 (C) | 3,600 | 11,000 | ID | NL | ID | ID | 7.3E+05 (C) | 4.8E+06 (C) | 8.0E+06 (C) | 4.8E+06 (C) | 4.70E+05 | 4.90E+06 | Various | NA | 3.5E+08 | 4.90E+06 | 4.70E+05 | 5.1E+06 | 1.0E+9 (D) | Various |
| Ambient Air Infinite Source Volatile Soil Inhalation (Nonres VSI) | 45,000 | 3.30E+06 | 2.40E+06 | 5.40E+07 | 3.00E+07 | 5,800 | 21,000 | ID | NL | ID | ID | 2.00E+06 | 1.90E+07 | 2.50E+07 | 1.90E+07 | 3.50E+05 | 1.80E+06 | Various | NA | 9.7E+07 | 1.80E+06 | 3.50E+05 | 1.90E+05 | 7.8E+08 | Various |
| Ambient Air Finite VSI for 5 Meter Source Thickness | 99,000 | 3.50E+07 | 3.10E+06 | 6.50E+07 | 4.10E+07 | 5,800 | 33,000 | ID | NL | ID | ID | 2.00E+06 | 4.60E+08 | 6.00E+08 | 4.60E+08 | 3.50E+05 | 1.80E+06 | Various | NA | 9.7E+07 | 1.80E+06 | 3.50E+05 | 1.90E+05 | 7.8E+08 | Various |
| Ambient Air Finite VSI for 2 Meter Source Thickness | 2.30E+05 | 3.50E+07 | 6.50E+06 | 1.30E+08 | 8.90E+07 | 9,800 | 74,000 | ID | NL | ID | ID | 3.00E+06 | 4.60E+08 | 6.00E+08 | 4.60E+08 | 3.50E+05 | 1.80E+06 | Various | NA | 9.7E+07 | 1.80E+06 | 3.50E+05 | 1.90E+05 | 7.8E+08 | Various |
| Ambient Air Particulate Soil Inhalation (Nonres PSI) | 4.70E+08 | 1.20E+10 | 1.30E+10 | 1.30E+11 | 8.80E+10 | 1.80E+07 | 1.50E+08 | 5.60E+09 | NL | ID | ID | 2.80E+09 | 3.60E+10 | 3.60E+10 | 3.60E+10 | 8.80E+07 | 2.90E+08 | Various | NA | 6.2E+09 | 2.90E+08 | 8.8E+07 | 2.9E+08 | 2.9E+09 | Various |
| Direct Contact (Nonres DC) | 8.40E+05 (C) | 1.6E+08 (C) | 7.1E+07 (C) | 1.0E+09 (C) | 7.1E+06 (C) | 430 | 4.20E+05 | 8.00E+06 | NL | 8.00E+06 | 8.00E+06 | 8.0E+07 (C) | 1.0E+08 (C) | 1.0E+08 (C) | 1.0E+08 (C) | 5.20E+07 | 2.60E+07 | Various | NA | 1.3E+08 | 2.60E+07 | 5.2E+07 | 5.2E+06 | 8.4E+07 | Various |
| **Screening Levels (µg/Kg)** | | | | | | | | | | | | | | | | | | | | | | | | | |
| Soil Saturation Concentration Screening Levels (Csat) | 4.00E+05 | 2.50E+05 | 1.40E+05 | 1.50E+05 | 5.90E+06 | 8.90E+05 | 1.20E+06 | 3.90E+05 | NL | 1.00E+07 | 1.00E+07 | 1.00E+07 | 94,000 | 1.10E+05 | 94,000 | NA | NA | NA | 250,000* | NA | NA | NA | NA | NA | NA |
| Residential Vapor Intrusion Soil Screening Levels ($S_{VIres}$) | 50 | 10,000 | 200 | 290 | 14,000 | 20 | 50 | 250 | NL | 460 | 50 | 140 | 3,200 | 2,200 | 1,700 | 440 | 7,500 | Various | NA | 4.32E+05 | 7,500 | 440 | 5,100 | 6.47E+07 | Various |
| Nonresidential Vapor Intrusion Soil Screening Levels ($S_{VInr}$) | 84.5 | 1.69E+05 | 4,000 | 4,900 | 2.39E+06 | 20 | 83.7 | 300 | NL | 7,600 | 740 | 2,400 | 53,000 | 37,000 | 28,000 | 8,900 | 1.26E+05 | Various | NA | 7.20E+06 | 1.26E+05 | 8,900 | 86,000 | 1.09E+09 | Various |

[box] Applicable Criterion/RBSL Exceeded
**BOLD** Value Exceeds Applicable Criterion/RBSL
Value Exceeds Soil Csat, LNAPL, and/or VSIL Screening Levels
Underline Screening Level Exceeded
bgs Below Ground Surface (feet)
1 1,2,3-Trimethylbenzene RBSLs based on the more restrictive of 1,2,4-trimethylbenzene and 1,3,5-trimethylbenzene.
2 Maximum of analyzed or calculated total lead value.
ND Non-detected at levels above laboratory method detection limit (MDL)
NA Not Applicable/Not Analyzed
NL Not Listed
NLL Not Likely to Leach
NLV Not Likely to Volatilize
ID Insufficient Data
(ECT) Split sampled collected by Environmental Consulting and Technology, Inc. on behalf of the Michigan Department of Environmental Quality (MDEQ).
* MDEQ LNAPL Screening Level above which Residual LNAPL is assumed to be present, or above which the Tier 1 Soil Volatilization to Indoor Air Inhalation (SVII) and/or Direct Contact (DC) Risk-Based Screening Levels (RBSLs) no longer apply.

TABLE 2 (1 OF 1)
SUMMARY OF GROUNDWATER ANALYTICAL RESULTS
VOCs AND PNAs
110 EAST BROAD STREET, LINDEN, MICHIGAN
PM PROJECT # 01-4982-0

Volatile Organic Compounds (VOCs) and Polynuclear Aromatic Compounds (PNAs) (µg/L)

| Sample ID | Sample Date | Screen Depth (feet bgs) | Depth to Groundwater (feet bgs) | Benzene | Toluene | Ethylbenzene | Xylenes | Methyl-tert-butyl ether (MTBE) | Ethylene dibromide (EDB) (1,2-Dibromoethane) | 1,2-Dichloroethane | Isopropyl benzene | n-Propylbenzene | 1,2,3-Trimethylbenzene[5] | 1,2,4-Trimethylbenzene | 1,3,5-Trimethylbenzene | Naphthalene | 2-Methylnaphthalene | 2-Butanone (MEK) | Cyclohexane | Sec-Butylbenzene | Styrene | Other VOCs | 2-Methylnaphthalene | Fluoranthene | Naphthalene | Phenanthrene | Pyrene | Other PNAs |
|---|---|---|---|---|---|---|---|---|---|---|---|---|---|---|---|---|---|---|---|---|---|---|---|---|---|---|---|---|
| Chemical Abstract Service Number (CAS#) | | | | 71432 | 108883 | 100414 | 1330207 | 1634044 | 106934 | 107062 | 98828 | 103651 | 526738 | 95636 | 108678 | 91203 | 91576 | 78933 | 110827 | 135988 | 100425 | Various | 91576 | 206440 | 91203 | 85018 | 129000 | Various |
| | | | | VOCs | | | | | | | | | | | | | | | | | | | PNAs | | | | | |
| MW-1 (PM) | 12/24/14 | 9.21-14.21 | 9.51 | 130 | 420 | 150 | 560 | <5 | <5 | <5 | 10 | 25 | 88 | 190 | 51 | 39 | <30 | NA | NA | NA | NA | NA | NA | NA | NA | NA | NA | NA |
| MW-1 (ECT) | 12/24/14 | 9.21-14.21 | 9.51 | 97 | 260 | 110 | 430 | <1 | NA | NA | 6 | 21 | 32 | 130 | 36 | 23 | 9 | NA | NA | NA | NA | NA | NA | NA | NA | NA | NA | NA |
| MW-1 | 10/05/15 | 9.21-14.21 | 10.47 | 5,400 | 870 | 2,400 | 3,700 | <50 | <50 | <50 | 62 | 130 | 360 | 1,000 | 200 | <300 | <300 | NA | NA | NA | NA | NA | NA | NA | NA | NA | NA | NA |
| MW-2 | 12/24/14 | 9.34-14.34 | 10.39 | LNAPL | LNAPL | LNAPL | LNAPL | LNAPL | LNAPL | LNAPL | LNAPL | LNAPL | LNAPL | LNAPL | LNAPL | LNAPL | LNAPL | LNAPL | LNAPL | LNAPL | LNAPL | LNAPL | LNAPL | LNAPL | LNAPL | LNAPL | LNAPL | LNAPL |
| MW-2 | 10/05/15 | 9.34-14.34 | 10.37 | LNAPL | LNAPL | LNAPL | LNAPL | LNAPL | LNAPL | LNAPL | LNAPL | LNAPL | LNAPL | LNAPL | LNAPL | LNAPL | LNAPL | LNAPL | LNAPL | LNAPL | LNAPL | LNAPL | LNAPL | LNAPL | LNAPL | LNAPL | LNAPL | LNAPL |
| MW-3 (PM) | 12/24/14 | 9.05-14.05 | 10.2 | 14,000 | 430 | 1,700 | 1,300 | <50 | <50 | <50 | 81 | 180 | <50 | 180 | <50 | 320 | <300 | NA | NA | NA | NA | NA | NA | NA | NA | NA | NA | NA |
| A-2 (Co-Locate MW-3) | 12/24/14 | 9.05-14.05 | 10.2 | 15,000 | 460 | 1,800 | 1,400 | <50 | <50 | <50 | 88 | 190 | 320 | 190 | <50 | 350 | <300 | NA | NA | NA | NA | NA | NA | NA | NA | NA | NA | NA |
| MW-3 (ECT) | 12/24/14 | 9.05-14.05 | 10.2 | 15,000 | 530 | 1,600 | 1,580 | <20 | NA | NA | 72 | 190 | 240 | 250 | 61 | 430 | <100 | NA | NA | NA | NA | NA | NA | NA | NA | NA | NA | NA |
| MW-3 | 10/05/15 | 9.05-14.05 | 10.22 | LNAPL | LNAPL | LNAPL | LNAPL | LNAPL | LNAPL | LNAPL | LNAPL | LNAPL | LNAPL | LNAPL | LNAPL | LNAPL | LNAPL | LNAPL | LNAPL | LNAPL | LNAPL | LNAPL | LNAPL | LNAPL | LNAPL | LNAPL | LNAPL | LNAPL |
| MW-4 (PM) | 12/24/14 | 7.25-12.25 | 10.96 | 4,500 | 1,200 | 4,000 | 14,000 | <50 | <50 | <50 | 130 | 310 | 890 | 2,600 | 610 | 630 | <300 | NA | NA | NA | NA | NA | NA | NA | NA | NA | NA | NA |
| MW-4 (ECT) | 12/24/14 | 7.25-12.25 | 10.96 | 4,400 | 1,200 | 3,500 | 12,500 | <10 | NA | NA | 110 | 330 | 630 | 2,200 | 550 | 730 | 140 | NA | NA | NA | NA | NA | NA | NA | NA | NA | NA | NA |
| MW-4 | 10/05/15 | 7.25-12.25 | 11.24 | 3,900 | 210 | 3,600 | 5,800 | <20 | <20 | <20 | 110 | 290 | 960 | 2,400 | 490 | 580 | <100 | NA | NA | NA | NA | NA | NA | NA | NA | NA | NA | NA |
| MW-5 (PM) | 12/24/14 | 7.71-12.71 | 9.70 | 310 | 14,000 | 4,600 | 20,000 | <50 | <50 | <50 | 180 | 390 | 1,100 | 3,100 | 750 | 780 | <300 | NA | NA | NA | NA | NA | NA | NA | NA | NA | NA | NA |
| MW-5 (ECT) | 12/24/14 | 7.71-12.71 | 9.70 | 260 | 13,000 | 3,900 | 16,400 | <5 | NA | NA | 130 | 390 | 730 | 2,700 | 540 | 850 | 160 | NA | NA | NA | NA | NA | NA | NA | NA | NA | NA | NA |
| MW-5 | 10/05/15 | 7.71-12.71 | 9.91 | 240 | 11,000 | 3,500 | 16,000 | <100 | <100 | <100 | 120 | 310 | 940 | 2,400 | 620 | 540 | <500 | NA | NA | NA | NA | NA | NA | NA | NA | NA | NA | NA |
| MW-6 | 10/05/15 | 6.20-11.20 | 10.27 | DRY | DRY | DRY | DRY | DRY | DRY | DRY | DRY | DRY | DRY | DRY | DRY | DRY | DRY | NA | NA | NA | NA | NA | NA | NA | NA | NA | NA | NA |
| MW-6 | 01/15/16 | 6.20-11.20 | 10.82 | <1 | <1 | <1 | 3 | <1 | <1 | <1 | <1 | <1 | <1 | <1 | <1 | <5 | <5 | NA | NA | NA | NA | NA | NA | NA | NA | NA | NA | NA |
| MW-7 | 10/05/15 | 8.54-13.54 | 10.36 | 43 | <1 | <1 | <3 | <1 | <1 | <1 | <1 | <1 | <1 | <1 | <1 | <5 | <5 | NA | NA | NA | NA | NA | NA | NA | NA | NA | NA | NA |
| MW-8 | 10/05/15 | 9.59-14.59 | 11.79 | <1 | <1 | <1 | <3 | <1 | <1 | <1 | <1 | <1 | <1 | <1 | <1 | <5 | <5 | NA | NA | NA | NA | NA | NA | NA | NA | NA | NA | NA |
| MW-9 | 10/05/15 | 7.70-12.70 | 12.03 | <1 | <1 | <1 | <3 | <1 | <1 | <1 | <1 | <1 | <1 | <1 | <1 | <5 | <5 | NA | NA | NA | NA | NA | NA | NA | NA | NA | NA | NA |
| MW-10 | 10/05/15 | 12.32-17.32 | 12.83 | DRY | DRY | DRY | DRY | DRY | DRY | DRY | DRY | DRY | DRY | DRY | DRY | DRY | DRY | NA | NA | NA | NA | NA | NA | NA | NA | NA | NA | NA |
| MW-10 | 01/15/16 | 12.32-17.32 | 10.12 | 74 | <10 | <10 | 77 | <10 | <10 | <10 | <10 | <10 | 30 | 33 | 26 | <50 | <50 | NA | NA | NA | NA | NA | NA | NA | NA | NA | NA | NA |
| MW-11 | 10/05/15 | 8.11-13.11 | 10.24 | 11,000 | 430 | 280 | 680 | <100 | <100 | <100 | <100 | <100 | <100 | 230 | <100 | <500 | <500 | NA | NA | NA | NA | NA | NA | NA | NA | NA | NA | NA |
| MW-12 | 10/05/15 | 7.71-12.71 | 9.74 | 2,400 | 3,100 | 930 | 2,900 | <20 | <20 | <20 | 49 | 110 | 260 | 860 | 170 | 160 | <100 | NA | NA | NA | NA | NA | NA | NA | NA | NA | NA | NA |
| MW-13 | 10/05/15 | 6.21-11.21 | 8.20 | 3,800 | <50 | <50 | <200 | <50 | <50 | <50 | <50 | <50 | <50 | <50 | <50 | <300 | <300 | NA | NA | NA | NA | NA | NA | NA | NA | NA | NA | NA |
| MW-14 | 10/05/15 | 6.83-11.83 | 8.75 | <1 | <1 | <1 | <3 | <1 | <1 | <1 | <1 | <1 | <1 | <1 | <1 | <5 | <5 | NA | NA | NA | NA | NA | NA | NA | NA | NA | NA | NA |
| MW-15-1 | 11/18/15 | 8.16-13.16 | 8.02 | 250 | <1 | <1 | <3 | 2.2 | <1 | <1 | 1.6 | 1.4 | <1 | <1 | <1 | <5 | <5 | <5 | <5 | <1 | <1 | ND | NA | NA | NA | NA | NA | NA |
| MW-15-2 | 11/18/15 | 7.45-12.45 | 4.81 | 790 | 52 | 91 | 433 | 17 | <1 | <1 | 7.4 | 4.8 | 51 | 160 | 47 | <5 | <5 | 22 | 21 | 1.8 | <1 | ND | NA | NA | NA | NA | NA | NA |
| MW-16 | 01/15/16 | 6.5-11.5 | 8.80 | <1 | <1 | <1 | 5 | <1 | <1 | <1 | <1 | <1 | <1 | <1 | <1 | <5 | <5 | NA | NA | NA | NA | NA | NA | NA | NA | NA | NA | NA |
| MW-17 | 01/15/16 | 8.38-13.38 | 10.55 | <1 | <1 | 5 | 27 | <1 | <1 | <1 | <1 | <1 | <1 | 11 | <1 | <5 | <5 | NA | NA | NA | NA | NA | NA | NA | NA | NA | NA | NA |
| MW-18 | 01/15/16 | 7.84-12.64 | 10.22 | <1 | 7 | 4 | 19 | <1 | <1 | <1 | <1 | <1 | 1 | 8 | 2 | <5 | <5 | NA | NA | NA | NA | NA | NA | NA | NA | NA | NA | NA |
| MW-19 | 01/15/16 | 3.61-8.61 | 6.18 | <1 | <1 | <1 | <3 | <1 | <1 | <1 | <1 | <1 | <1 | <1 | <1 | <5 | <5 | NA | NA | NA | NA | NA | NA | NA | NA | NA | NA | NA |
| MW-20 | 01/15/16 | 7.14-12.14 | 9.12 | <1 | <1 | 1 | 7 | <1 | <1 | <1 | <1 | <1 | <1 | <1 | <1 | <5 | <5 | NA | NA | NA | NA | NA | NA | NA | NA | NA | NA | NA |
| **Atwell, LLC Samples - 2012 Subsurface Investigation** | | | | | | | | | | | | | | | | | | | | | | | | | | | | |
| AB-1W | 10/17/12 | NA | NA | ND | ND | ND | ND | ND | NA | NA | ND | ND | ND | ND | ND | ND | ND | ND | ND | ND | ND | NA | NA | NA | NA | NA | NA | NA |
| AB-2W | 10/17/12 | NA | NA | 4,300 | 2,700 | 870 | 3,400 | ND | NA | NA | 36 | 98 | ND | 620 | 240 | ND | ND | ND | ND | ND | ND | NA | NA | NA | NA | NA | NA | NA |
| AB-5W | 10/17/12 | NA | NA | ND | ND | ND | ND | ND | NA | NA | ND | ND | ND | ND | ND | ND | ND | ND | ND | ND | ND | NA | NA | NA | NA | NA | NA | NA |
| AB-6W | 10/17/12 | NA | NA | 390 | 110 | 1,200 | 5,300 | ND | NA | NA | 85 | 250 | ND | 1,500 | 600 | ND | ND | ND | ND | ND | ND | NA | NA | NA | NA | NA | NA | NA |
| **ECT Samples - MDEQ 2014 Subsurface Investigation** | | | | | | | | | | | | | | | | | | | | | | | | | | | | |
| GP-1W | 07/30/14 | 7.0-12.0 | NA | 1,900 | <10 | 94 | 91 | <10 | <10 | <10 | <10 | 20 | <10 | 110 | <10 | <50 | <50 | <50 | <50 | <10 | <10 | ND | <5 | <1 | 27 | <1 | <1 | ND |
| GP-1W dup | 07/30/14 | 7.0-12.0 | NA | 2,300 | <10 | 52 | 84 | 11 | <10 | <10 | <10 | 22 | 19 | 100 | <10 | <50 | <50 | <50 | <50 | <10 | <10 | ND | <5 | <1 | 28 | <1 | <1 | ND |
| GP-1/TMW | 08/21/14 | 7.0-12.0 | 6.22 | 1,900 | <10 | 85 | 84 | <10 | <10 | <10 | <10 | 19 | <10 | 93 | <10 | <50 | <50 | <50 | <50 | <10 | <10 | ND | NA | NA | NA | NA | NA | NA |
| GP-2W | 07/30/14 | 9.0-12.5 | NA | 4,100 | <20 | 610 | 200 | <20 | <20 | <20 | 34 | 83 | <20 | 410 | <20 | 100 | <100 | <100 | <100 | <20 | <20 | ND | <5 | <1 | 74 | <1 | <1 | ND |
| GP-3W | 07/30/14 | 7.5-11 | NA | 3,500 | 1,800 | 1,900 | 25,500 | <50 | <50 | <50 | 97 | 220 | <50 | 4,100 | 1,100 | 850 | <250 | <250 | <250 | <50 | <50 | ND | 340 | 14 | 720 | 10 | 13 | ND |
| GP-4W | 07/30/14 | 12.5-15 | NA | 4,200 | 80 | 280 | 254 | 5 | <1 | <1 | 17 | 27 | <1 | 130 | 2 | 77 | <5 | <5 | <5 | <1 | <1 | ND | <5 | <1 | 33 | <1 | <1 | ND |
| GP-5W | 07/30/14 | 7.0-10.5 | NA | <1 | <1 | <1 | <3 | 1 | <1 | <1 | <1 | <1 | <1 | <1 | <1 | <5 | <5 | <5 | <5 | <1 | <1 | ND | <5 | <1 | <1 | <1 | <1 | ND |
| GP-6W | 07/30/14 | 6.0-9.5 | NA | <1 | <1 | <1 | <3 | <1 | <1 | <1 | <1 | <1 | <1 | <1 | <1 | <5 | <5 | <5 | <5 | <1 | <1 | ND | <5 | <1 | <1 | <1 | <1 | ND |
| GP-7W | 07/31/14 | 6.0-9.5 | NA | 5,000 | 110 | 88 | 109 | 4 | <1 | <1 | 9 | 12 | <1 | 35 | 3 | 38 | <5 | <5 | <5 | <1 | <1 | ND | <5 | <1 | 24 | <1 | <1 | ND |
| GP-8W | 07/31/14 | 7.0-10.5 | NA | <1 | <1 | <1 | <3 | 28 | <1 | <1 | <1 | <1 | <1 | <1 | <1 | <5 | <5 | <5 | <5 | <1 | <1 | ND | <5 | <1 | <1 | <1 | <1 | ND |
| GP-9W | 07/31/14 | 7.0-12.0 | NA | 13,000 | 8,400 | 2,800 | 10,300 | <20 | <20 | <20 | 110 | 290 | <20 | 2,000 | 530 | 760 | <100 | <100 | <5 | <20 | 110 | ND | 110 | <10 | 490 | <10 | <10 | ND |
| GP-9/TMW | 08/21/14 | 7.0-12.0 | 9.08 | 14,000 | 2,400 | 1,800 | 4,500 | <20 | <20 | <20 | 82 | 300 | 420 | 1,200 | 310 | 600 | 140 | <100 | 160 | <20 | <20 | ND | NA | NA | NA | NA | NA | NA |
| GP-10W | 07/31/14 | 7.25-12.5 | NA | 10,000 | 8,200 | 3,200 | 8,900 | <50 | <50 | <50 | 100 | 270 | <50 | 2,200 | 350 | 670 | <250 | <250 | <250 | <50 | <50 | ND | 89 | <10 | 370 | <10 | <10 | ND |
| GP-13W | 08/01/14 | 7.5-12.5 | NA | 31 | 2 | 110 | <3 | <1 | <1 | <1 | 21 | 40 | <1 | 18 | <1 | <5 | <5 | <5 | <5 | 4 | <1 | ND | NA | NA | NA | NA | NA | NA |
| GP-13/TMW | 08/21/14 | 7.5-12.5 | 10.84 | 35 | 2.2 | 97 | <3 | <1 | <1 | <1 | 20 | 39 | 11 | 1.7 | <1 | <5 | <5 | 8.4 | 7.4 | 3.5 | <1 | ND | NA | NA | NA | NA | NA | NA |
| GP-13/TMW dup | 08/21/14 | 7.5-12.5 | 10.84 | 35 | 2.1 | 98 | <3 | <1 | <1 | <1 | 22 | 41 | 12 | 2 | <1 | <5 | <5 | 6.2 | 7.5 | 3.6 | <1 | ND | NA | NA | NA | NA | NA | NA |
| GP-14W | 08/01/14 | 6.0-11.0 | NA | 9,900 | 24,000 | 1,800 | 8,700 | <100 | <100 | <100 | <100 | 210 | <100 | 1,700 | 500 | <500 | <500 | <500 | <500 | <100 | <100 | ND | NA | NA | NA | NA | NA | NA |
| GP-16W | 08/01/14 | 7.0-12.0 | NA | 2 | <1 | <1 | <3 | <1 | <1 | <1 | <1 | <1 | <1 | <1 | <1 | <5 | <5 | <5 | <5 | <1 | <1 | ND | NA | NA | NA | NA | NA | NA |
| GP-16W Dup | 08/01/14 | 7.0-12.0 | NA | 2 | <1 | <1 | <3 | <1 | <1 | <1 | <1 | <1 | <1 | <1 | <1 | <5 | <5 | <5 | <5 | <1 | <1 | ND | NA | NA | NA | NA | NA | NA |
| GP-16/TMW | 08/21/14 | 7.0-12.0 | 8.96 | <1 | <1 | <1 | <3 | <1 | <1 | <1 | <1 | <1 | <1 | <1 | <1 | <5 | <5 | <5 | <5 | <1 | <1 | ND | NA | NA | NA | NA | NA | NA |
| GP-16/TMW dup | 08/21/14 | 7.0-12.0 | 8.96 | <1 | <1 | <1 | <3 | <1 | <1 | <1 | <1 | <1 | <1 | <1 | <1 | <5 | <5 | <5 | <5 | <1 | <1 | ND | NA | NA | NA | NA | NA | NA |
| GP-17W | 08/01/14 | 7.0-12.0 | NA | 5,000 | 6,800 | 1,500 | 6,300 | <50 | <50 | <50 | 82 | 210 | <1 | 1,400 | 390 | 250 | <250 | <250 | <250 | <50 | <50 | ND | NA | NA | NA | NA | NA | NA |
| GP-18W | 08/01/14 | 12.5-15 | NA | <1 | <1 | <1 | <3 | <1 | <1 | <1 | <1 | <1 | <1 | <1 | <1 | <5 | <5 | <5 | <5 | <1 | <1 | ND | NA | NA | NA | NA | NA | NA |
| GP-19W | 08/01/14 | 7.0-12.0 | NA | <1 | <1 | <1 | <3 | <1 | <1 | <1 | <1 | <1 | <1 | <1 | <1 | <5 | <5 | <5 | <5 | <1 | <1 | ND | NA | NA | NA | NA | NA | NA |
| GP-19/TMW | 08/20/14 | 7.0-12.0 | 8.06 | <1 | <1 | <1 | <3 | <1 | <1 | <1 | <1 | <1 | <1 | <1 | <1 | <5 | <5 | <5 | <5 | <1 | <1 | ND | NA | NA | NA | NA | NA | NA |
| **ECT Samples - MDEQ 2015 Subsurface Investigation** | | | | | | | | | | | | | | | | | | | | | | | | | | | | |
| HA-15-1 | 11/11/15 | NA | NA | 2,000 | <10 | <10 | <30 | <10 | NA | NA | NA | NA | <10 | <10 | <10 | NA | NA | NA | NA | NA | NA | NA | NA | NA | NA | NA | NA | NA |
| GP-15-1 | 11/10/15 | NA | NA | <1 | <1 | <1 | <3 | <1 | NA | NA | NA | NA | <1 | <1 | <1 | NA | NA | NA | NA | NA | NA | NA | NA | NA | NA | NA | NA | NA |
| GP-15-2 | 11/10/15 | NA | NA | 2,600 | <10 | <10 | <30 | 15 | NA | NA | NA | NA | 10 | <10 | <10 | NA | NA | NA | NA | NA | NA | NA | NA | NA | NA | NA | NA | NA |
| GP-15-13 | 11/11/15 | NA | NA | <1 | <1 | <1 | <3 | <1 | NA | NA | NA | NA | <1 | <1 | <1 | NA | NA | NA | NA | NA | NA | NA | NA | NA | NA | NA | NA | NA |
| GP-15-15 | 11/12/15 | NA | NA | 80 | 27 | 2,800 | 5,625 | <10 | NA | NA | NA | NA | 320 | 1,200 | 250 | NA | NA | NA | NA | NA | NA | NA | NA | NA | NA | NA | NA | NA |
| GP-15-17 | 11/12/15 | NA | NA | <1 | <1 | 1.1 | 9 | <1 | NA | NA | NA | NA | 2.4 | 9 | 2.9 | NA | NA | NA | NA | NA | NA | NA | NA | NA | NA | NA | NA | NA |
| GP-15-19 | 11/12/15 | NA | NA | 1.8 | 1.8 | <1 | <3 | <1 | NA | NA | NA | NA | <1 | <1 | <1 | NA | NA | NA | NA | NA | NA | NA | NA | NA | NA | NA | NA | NA |
| GP-15-20 | 11/12/15 | NA | NA | <10 | <10 | 650 | 2,348 | <10 | NA | NA | NA | NA | 170 | 780 | 180 | NA | NA | NA | NA | NA | NA | NA | NA | NA | NA | NA | NA | NA |
| Walmar Storm Outfall | 11/12/15 | NA | NA | <1 | <1 | <1 | <3 | <1 | <1 | <1 | <1 | <1 | <1 | <1 | <1 | <5 | <5 | <5 | <5 | <1 | <1 | ND | NA | NA | NA | NA | NA | NA |
| **Cleanup Criteria Requirements for Response Activity (R 299.1 - R 299.50)**<br>**Generic Groundwater Cleanup Criteria Table 1: Residential and Non-Residential Part 201 Generic Cleanup Criteria and Screening Levels/Part 213 Risk-Based Screening Levels, December 30, 2013**<br>**MDEQ Guidance Document For The Vapor Intrusion Pathway, Policy and Procedure Number: 09-017, Appendix D Vapor Intrusion Screening Values, May 2013** | | | | | | | | | | | | | | | | | | | | | | | | | | | | |
| **Residential/Nonresidential (µg/L)** | | | | | | | | | | | | | | | | | | | | | | | | | | | | |
| **Residential Drinking Water (Res DW)** | | | | 5.0 (A) | 790 (E) | 74 (E) | 280 (E) | 40 (E) | 0.050 (A) | 5.0 (A) | 800 | 80 | 63 (E) | 63 (E) | 72 (E) | 520 | 260 | 850 | NL | 80 | 100 (A) | Various | 260 | 210 (S) | 520 | 52 | 140 (S) | Various |
| **Residential Health Based Drinking Water Values** | | | | NL | 1,000 (E) | 700 (E) | 10,000 (E) | 240 (E) | NL | NL | NL | NL | NL | 1,000 (E) | 1,000 (E) | NL | NL | NL | NL | NL | NL | Various | NL | NL | NL | NL | NL | Various |
| **Nonresidential Drinking Water (Nonres DW)** | | | | 5.0 (A) | 790 (E) | 74 (E) | 280 (E) | 40 (E) | 0.050 (A) | 5.0 (A) | 2,300 | 230 | 63 (E) | 63 (E) | 72 (E) | 1,500 | 750 | 2,700 | NL | 230 | 100 (A) | Various | 750 | 210 (S) | 1,500 | 150 | 140 (S) | Various |
| **Nonresidential Health Based Drinking Water Values** | | | | NL | 1,000 (E) | 700 (E) | 10,000 (E) | 800 (E) | NL | NL | NL | NL | NL | 2,000 (E) | 2,900 (E) | NL | NL | NL | NL | NL | NL | Various | NL | NL | NL | NL | NL | Various |
| **Groundwater Surface Water Interface (GSI)** | | | | 200 (X) | 270 | 18 | 41 | 7,100 (X) | 5.7 (X) | 360 (X) | ID | ID | 17 | 17 | 45 | 11 | 19 | 9,800 (X) | NL | ID | 80 (X) | Various | 19 | 1.6 | 11 | 2.0 (M); 1.4 | ID | Various |
| **Residential Groundwater Volatilization to Indoor Air Inhalation (Res GVII)** [2] | | | | 5,600 | 5.3E+5 (S) | 1.10E+05 | 1.9E+5 (S) | 4.7E+7 (S) | 2,400 | 9,600 | 56,000 (S) | ID | 56,000 (S) | 56,000 (S) | 61,000 (S) | 31,000 (S) | 25,000 (S) | NLV | NL | ID | 1.70E+05 | Various | 25,000 (S) | 210 (S) | 31,000 (S) | 1,000 (S) | 140 (S) | Various |
| **Nonresidential Groundwater Volatilization to Indoor Air Inhalation (Nonres GVII)** [2] | | | | 35,000 | 5.3E+6 (S) | 1.7E+5 (S) | 1.9E+5 (S) | 4.7E+7 (S) | 16,000 | 59,000 | 56,000 (S) | ID | 56,000 (S) | 56,000 (S) | 61,000 (S) | 31,000 (S) | 25,000 (S) | NLV | NL | ID | 3.1E+5 (S) | Various | 25,000 (S) | 210 (S) | 31,000 (S) | 1,000 (S) | 140 (S) | Various |
| **Screening Levels (µg/L)** | | | | | | | | | | | | | | | | | | | | | | | | | | | | |
| **Residential Groundwater Vapor Intrusion Screening Levels ($GW_{VI-res}$)** [3] | | | | 27 | 36,000 | 700 | 10,000 | 2.50E+05 | 3.2 | 41 | 10 | 92 | 2,400 | 1,700 | 1,200 | 240 | 940 | NL | NL | 16 | 800 | Various | 940 | NL | 240 | 110 | 4.10E+05 | Various |
| **Nonresidential Groundwater Vapor Intrusion Screening Levels ($GW_{VI-nr}$)** [3] | | | | 140 | 1.50E+05 | 2,800 | 10,000 | 1.00E+06 | 16 | 210 | 53 | 390 | 10,000 | 7,300 | 5,100 | 1,200 | 3,900 | NL | NL | 68 | 4,100 | Various | 3,900 | NL | 1,200 | 480 | 1.7E+06 | Various |
| **Residential Vapor Intrusion Shallow Groundwater Screening Levels ($GW_{VI-sump-res}$)** [4] | | | | 5.0 | 1,000 | 700 | 10,000 | 250 | 0.050 | 5.0 | 6.0 | 1.0 | 5.0 | 1.7 | 1.2 | 6.0 | 6.0 | NL | NL | 1.0 | 100 | Various | 5.0 | NL | 5.0 | 2.0 | 410 | Various |
| **Nonresidential Vapor Intrusion Shallow Groundwater Screening Levels ($GW_{VI-sump-nr}$)** [4] | | | | 5.0 | 1,000 | 700 | 10,000 | 1,000 | 0.050 | 5.0 | 5.0 | 1.0 | 10 | 7.3 | 5.1 | 5.0 | 5.0 | NL | NL | 1.0 | 100 | Various | 5.0 | NL | 5.0 | 2.0 | 1,700 | Various |
| **Water Solubility** | | | | 1.75E+06 | 5.26E+05 | 1.69E+06 | 1.86E+05 | 4.68E+07 | 4.20E+06 | 8.52E+06 | 56,000 | NA | NL | 56,000 | 61,000 | 31,000 | 25,000 | 7.40E+07 | NL | NA | 3.10E+05 | Various | 25,000 | 210 | 31,000 | 1,000 | 140 | Various |
| **Flammability and Explosivity Screening Level** | | | | 68,000 | 61,000 | 43,000 | 70,000 | ID | ID | 2.50E+06 | 29,000 | ID | NL | 56,000 (S) | ID | NA | ID | 4.70E+07 | NL | ID | 1.40E+06 | Various | ID | ID | NA | ID | ID | Various |
| **DRAFT Acute Vapor Intrusion Screening Levels for Groundwater (µg/L)** | | | | | | | | | | | | | | | | | | | | | | | | | | | | |
| **IRASL Groundwater ($AGW_{vi}$)** | | | | 11,000 | 2.59E+05 | NL | 1.54E+05 | 5.70E+05 | NL | NL | NL | NL | NL | NL | NL | NL | NL | NL | NL | NL | 3.8E+05 | Various | NL | NL | NL | NL | NL | NL |
| **IRASL Groundwater In Contact With Structure ($AGW_{vi-sump}$)** | | | | 11 | 280 | NL | 150 | 570 | NL | NL | NL | NL | NL | NL | NL | NL | NL | NL | NL | NL | 350 | Various | NL | NL | NL | NL | NL | NL |

[Box] Applicable Criteria/RBSL Exceeded
**BOLD** Value Exceeds Applicable Criteria
bgs Below Ground Surface (feet)
ND Not detected at levels above the laboratory Method Detection Limit (MDL) or Minimum Quantitative Level (MQL)
[Shaded] Value Exceeds MDEQ Vapor Intrusion Screening Levels for Groundwater Shallower than 3 Meters
Underline MDEQ VISL Exceeded
[1] Rule 323.1057 of Part 4 Water Quality Standards
[2] Tier 1 GVII Criteria based on 3 meter (or greater) groundwater depth
[3] (2013 Vapor Intrusion Guidance) Screening Levels based on depth to groundwater less than 1.5 meters and not in contact with building foundation
[4] (2013 Vapor Intrusion Guidance) Screening levels based on groundwater in contact with the building foundation or within a sump
[5] 1,2,3-Trimethylbenzene RBSLs based on the more restrictive of 1,2,4-trimethylbenzene and 1,3,5-trimethylbenzene.
NL Not Listed
LNAPL Measurable Light Non-Aqueous Phase Liquid present in well
ID Insufficient Data
NA Not available or not applicable
(ECT) Split samples collected by Environmental Consulting and Technology, Inc. on behalf of the Michigan Department of Environmental Quality (MDEQ)

**TABLE 3**
**SUMMARY OF SOIL VAPOR ANALYTICAL RESULTS**
**VOLATILE ORGANIC COMPOUNDS**
**110 EAST BROAD STREET, LINDEN, MICHIGAN**
**PME PROJECT # 01-4982-0-002**

| VOLATILE ORGANIC COMPOUNDS ($\mu g/m^3$) | | | Acetone | Benzene | Carbon disulfide | Chlorobenzene | Chloroform | Cyclohexane | Dichlorodifluoromethane | m-Dichlorobenzene | Ethylbenzene | 4-Ethyltoluene | Freon 113 | Heptane | Hexane | Methylene chloride | Methyl ethyl ketone | Methylmethacrylate | Naphthalene | Propylene | Styrene | 1,2,4-Trimethylbenzene | 1,3,5-Trimethylbenzene | 2,2,4-Trimethylpentane | Tetrachloroethylene | Toluene | Trichloroethylene | Trichlorofluoromethane | m,p-Xylene | o-Xylene | Xylenes (total) | Other VOCs |
|---|---|---|---|---|---|---|---|---|---|---|---|---|---|---|---|---|---|---|---|---|---|---|---|---|---|---|---|---|---|---|---|---|
| ical Abstract Service Number (CAS#) | | | 67641 | 71432 | 75150 | 108907 | 67663 | 110827 | 75718 | 541731 | 100414 | 622968 | 76131 | 142825 | 110543 | 75092 | 78933 | 80626 | 91203 | 115071 | 100425 | 95636 | 108678 | 540841 | 127184 | 108883 | 79016 | 75694 | 1330207 | 95476 | 1330207 | Various |
| Sample ID | Sample Date | Sample Depth | VOCs | | | | | | | | | | | | | | | | | | | | | | | | | | | | | |
| **Sub-Slab Samples** | | | | | | | | | | | | | | | | | | | | | | | | | | | | | | | | |
| SG-1 | 12/19/14 | Subslab | 210 | 35 | <2.5 | <3.7 | 15 | 27 | <4.0 | 27 | 8 | <3.9 | <6.1 | <3.3 | 220 | 160 | 33 | 16 | 9 | <3.4 | <3.4 | <3.9 | <3.9 | 25 | <1.1 | 26 | <0.86 | <4.5 | 89 | 8 | 77 | <MDL |
| SG-1 | 10/6/2015 | Subslab | <1.9 | <2.6 | <2.5 | <3.7 | <3.9 | <2.8 | <4.0 | <4.8 | 36 | 87 | <6.1 | <3.3 | 260 | 130 | 16 | <3.3 | <4.2 | <3.4 | 7 | 81 | 20 | 16 | 5 | 440 | 6 | 53 | 160 | 56 | 216 | <MDL |
| SG-2 | 10/6/2015 | Subslab | <1.9 | 82 | <2.5 | <3.7 | 19 | <2.8 | 510 | <4.8 | 29 | 60 | <6.1 | 230 | 620 | 420 | <2.4 | <3.3 | <4.2 | <3.4 | 4 | 50 | 13 | 1,700 | 7 | 120 | <0.86 | 64 | 110 | 34 | 144 | <MDL |
| SG-20 | 1/13/2016 | Subslab | 22 | <2.6 | <2.5 | <3.7 | <3.9 | <2.8 | <4.0 | <4.8 | <3.5 | <3.9 | <6.1 | <3.3 | 29 | 320 | <2.4 | <3.3 | <4.2 | <3.4 | <3.4 | <3.9 | <3.9 | <2.8 | <1.1 | 14 | <0.86 | <4.5 | 13 | 4 | 17 | <MDL |
| SG-21 | 1/11/2016 | Subslab | <1.9 | 72 | <2.5 | <3.7 | <3.9 | 16,000 | <4.0 | <4.8 | 32 | <3.9 | <6.1 | <3.3 | 180 | <2.8 | <2.4 | <3.3 | <4.2 | <3.4 | <3.4 | 26 | 9 | 23,000 | 260 | 79 | <0.86 | <4.5 | 74 | 100 | 174 | <MDL |
| **Beacon & Bridge #8 Area** | | | | | | | | | | | | | | | | | | | | | | | | | | | | | | | | |
| SG-3 | 10/6/2015 | 7.5-8.0 | 93 | 54 | 110 | <3.7 | 8 | <2.8 | 92 | <4.8 | 39 | 57 | <6.1 | 100 | 290 | 180 | <2.4 | <3.3 | <4.2 | <3.4 | 4 | 44 | 13 | 750 | 4 | 110 | 2 | 5 | 150 | 47 | 197 | <MDL |
| SG-4 | 10/6/2015 | 6.0-7.0 | <1.9 | <2.6 | 31 | <3.7 | 23 | <2.8 | <4.0 | <4.8 | 36 | 63 | 8 | 39 | 300 | 430 | <2.4 | <3.3 | <4.2 | 36 | 3 | 42 | 14 | 220 | 5 | 66 | 3 | 6 | 140 | 44 | 184 | <MDL |
| SG-5 | 10/6/2015 | 5.5-6.0 | 63 | 76 | <2.5 | <3.7 | 8 | <2.8 | <4.0 | <4.8 | 18 | 54 | <6.1 | 41 | 380 | 65 | <2.4 | <3.3 | <4.2 | <3.4 | 4 | 42 | 13 | 150 | 2 | 51 | 3 | <4.5 | 77 | 33 | 107 | <MDL |
| SG-6 | 10/6/2015 | 5.5-6.0 | 180 | <2.6 | <2.5 | <3.7 | 20 | <2.8 | <4.0 | <4.8 | 27 | 67 | 6 | 66 | 600 | 140 | <2.4 | <3.3 | <4.2 | <3.4 | 6 | 59 | 18 | 200 | 5 | 120 | 3 | 100 | 100 | 42 | 142 | <MDL |
| SG-7S | 10/6/2015 | 5.5-6.0 | <38 | **5,400** | <50 | <74 | 940 | <56 | <80 | <96 | 13,000 | 1,800 | <122 | 8,500 | 16,000 | 4,900 | <48 | <66 | <84 | <40 | 260 | 340 | 210 | 4,300 | <22 | 15,000 | <17.2 | <90 | 25,000 | 6,900 | 31,900 | <MDL |
| SG-7D | 10/6/2015 | 9.0-10.0 | <38 | **390,000** | <50 | <74 | <78 | <56 | <80 | <96 | **130,000** | 1,500 | <122 | **6,700,000** | **2,700,000** | <56 | <48 | <66 | <84 | <40 | 1,200 | 240 | 170 | 1,200,000 | <22 | 290,000 | <17.2 | <90 | **190,000** | **37,000** | **227,000** | <MDL |
| SG-8 | 10/6/2015 | 5.5-6.0 | <38 | **6,500** | <50 | 120 | <78 | <56 | <80 | <96 | 1,300 | 1,100 | <122 | 64,000 | 240,000 | <56 | <48 | <66 | <84 | <40 | 150 | 170 | 160 | 85,000 | <22 | 7,600 | <17.2 | <90 | 2,100 | 480 | 2,580 | <MDL |
| SG-9 | 10/6/2015 | 5.5-6.0 | <38 | **700,000** | <50 | <74 | <78 | <56 | <80 | <96 | **270,000** | 29,000 | <122 | **5,800,000** | **2,600,000** | <56 | <48 | <66 | <84 | <40 | 5,800 | 3,300 | 2,600 | 1,200,000 | <22 | 390,000 | <17.2 | <90 | **370,000** | **160,000** | **530,000** | <MDL |
| SG-10 | 10/6/2015 | 5.5-6.0 | <38 | **29,000** | <50 | <74 | <78 | <56 | <80 | <96 | 12,000 | 1,000 | <122 | 61,000 | 120,000 | <56 | <48 | <66 | <84 | <40 | 180 | 170 | 110 | 77,000 | <22 | 29,000 | <17.2 | <90 | 19,000 | 4,600 | 23,600 | <MDL |
| SG-11 | 10/6/2015 | 7.5-8.0 | <38 | **730,000** | <50 | <74 | <78 | <56 | <80 | <96 | **220,000** | 9,500 | <122 | **7,900,000** | **3,100,000** | <56 | <48 | <66 | <84 | <40 | 1,900 | 1,300 | 1,300 | **1,300,000** | <22 | 420,000 | <17.2 | <90 | **310,000** | **57,000** | **367,000** | <MDL |
| SG-12 | 10/6/2015 | 5.5-6.0 | <38 | **43,000** | <50 | <74 | <78 | <56 | <80 | <96 | **32,000** | 4,900 | <122 | 100,000 | **250,000** | <56 | <48 | <66 | <84 | <40 | 520 | 750 | 540 | 150,000 | <22 | 53,000 | <17.2 | <90 | **58,000** | 16,000 | **74,000** | <MDL |
| SG-13 | 1/15/2016 | 5.5-6.0 | 40 | <2.6 | <2.5 | <3.7 | <3.9 | <2.8 | <4.0 | <4.8 | 210 | <3.9 | <6.1 | <3.3 | 43 | <2.8 | <2.4 | <3.3 | <4.2 | <3.4 | <3.4 | 15 | <3.9 | <2.8 | <1.1 | 14 | <0.86 | <4.5 | 1,000 | 510 | 1,510 | <MDL |
| SG-14 | 1/13/2016 | 6.0-7.0 | 22 | <2.6 | <2.5 | <3.7 | <3.9 | <2.8 | <4.0 | <4.8 | 6 | <3.9 | <6.1 | <3.3 | 21 | 130 | 110 | <3.3 | <4.2 | <3.4 | <3.4 | <3.9 | <3.9 | <2.8 | 7 | 18 | <0.86 | <4.5 | 20 | 7 | 27 | <MDL |
| SG-15 | 1/13/2016 | 5.0-6.0 | 43 | <2.6 | <2.5 | <3.7 | <3.9 | <2.8 | <4.0 | <4.8 | 7 | <3.9 | <6.1 | <3.3 | 32 | 190 | 170 | <3.3 | <4.2 | <3.4 | <3.4 | <3.9 | 9 | <2.8 | <1.1 | 23 | <0.86 | <4.5 | 22 | 7 | 29 | <MDL |
| SG-16 | 1/13/2016 | 6.0-7.0 | 780 | <130 | <125 | <185 | <195 | <140 | <200 | <240 | 4,400 | <195 | <305 | <165 | <140 | <140 | <120 | <165 | <210 | <170 | <170 | <195 | <195 | <185 | <55 | <150 | <43 | <225 | 21,000 | 9,100 | 30,100 | <MDL |
| SG-18 | 1/26/16 | 5.5-6.0' | 34 | <2.6 | <2.5 | <3.7 | <3.9 | <2.8 | <4.0 | 20 | 10 | <3.9 | <6.1 | <3.3 | <2.8 | <2.8 | 230 | <3.3 | <4.2 | <3.4 | <3.4 | 12 | <3.9 | <2.8 | 68 | 26 | <0.86 | <4.5 | 44 | 14 | 58 | <MDL |
| **North Bridge Street Area** | | | | | | | | | | | | | | | | | | | | | | | | | | | | | | | | |
| SG-17 | 1/13/2016 | 5.0-6.0 | 970 | **1,400** | <125 | <185 | <195 | 1,500 | <200 | <240 | 26,000 | <195 | <305 | <165 | 550 | <140 | <120 | <165 | <210 | <170 | <170 | <195 | <195 | <185 | <55 | 230 | <43 | <225 | **82,000** | 26,000 | **108,000** | <MDL |
| SG-19 | 1/15/2016 | 5.5-6.0 | 820 | <130 | <125 | <185 | <195 | <140 | <200 | <240 | 12,000 | <195 | <305 | <165 | <140 | <140 | 960 | <165 | <210 | <170 | <170 | <195 | <195 | <185 | <55 | <150 | <43 | <225 | **49,000** | 19,000 | **68,000** | <MDL |
| **MDEQ Guidance Document For The Vapor Intrusion Pathway, Policy and Procedure Number: 09-017, Appendix D Vapor Intrusion Screening Values, May 2013** | | | | | | | | | | | | | | | | | | | | | | | | | | | | | | | | |
| **Residential Screening Levels ($\mu g/m^3$)** | | | | | | | | | | | | | | | | | | | | | | | | | | | | | | | | |
| **Vapor Intrusion Indoor Air Screening Levels ($IA_{VI}$)** | | | 6,200 | 3.3 | 730 | 73 | 11 | 6,300 | 52,000 | 3.1 | 87 | NDC | 20,000 | 3,700 | 730 | 58 | 5,200 | NDC | 2.3 | NDC | 48 | 230 | 230 | 3,700 | 36 | 5,200 | 2.1 | 59,000 | 100 | 100 | 100 | Various |
| **Vapor Intrusion Shallow Sub-Slab Soil Gas Screening Levels (≤ 1.5m bgs) ($SG_{VI-SS}$)** | | | 2.10E+05 | 110 | 24,000 | 2,400 | 380 | 2.10E+05 | 1.70E+06 | 100 | 2,900 | NDC | 6.80E+05 | 1.20E+05 | 24,000 | 1,900 | 1.70E+05 | NDC | 75 | NDC | 1,600 | 7,600 | 7,600 | 1.20E+05 | 1,200 | 1.70E+05 | 70 | 2.00E+06 | 3,500 | 3,500 | 3,500 | Various |
| **Vapor Intrusion Deep Soil Gas Screening Levels ($SG_{VI}$)** | | | 2.10E+06 | 1,100 | 2.40E+05 | 24,000 | 3,800 | 2.10E+06 | 1.70E+07 | 1,000 | 29,000 | NDC | 6.80E+06 | 1.20E+06 | 2.40E+05 | 19,000 | 1.70E+06 | NDC | 750 | NDC | 16,000 | 76,000 | 76,000 | 1.20E+06 | 12,000 | 1.70E+06 | 700 | 2.00E+07 | 35,000 | 35,000 | 35,000 | Various |
| **Nonresidential Screening Levels ($\mu g/m^3$)** | | | | | | | | | | | | | | | | | | | | | | | | | | | | | | | | |
| **Vapor Intrusion Indoor Air Screening Levels ($IA_{VI}$)** | | | 26,000 | 16 | 3,100 | 310 | 57 | 26,000 | 2.20E+05 | 13 | 440 | NDC | 85,000 | 15,000 | 3100 | 290 | 22,000 | NDC | 11 | NDC | 240 | 960 | 960 | 15,000 | 180 | 22,000 | 8.8 | 2.5E+05 | 440 | 440 | 440 | Various |
| **Vapor Intrusion Shallow Sub-Slab Soil Gas Screening Levels (≤ 1.5m bgs) ($SG_{VI-SS}$)** | | | 3.40E+06 | 2,200 | 4.10E+05 | 41,000 | 7,600 | 3.50E+06 | 2.90E+07 | 1,800 | 59,000 | NDC | 1.10E+07 | 2.0E+06 | 4.10E+05 | 39,000 | 2.90E+06 | NDC | 1,500 | NDC | 32,000 | 1.30E+05 | 1.30E+05 | 2.00E+06 | 23,000 | 2.90E+06 | 1,200 | 3.3E+07 | 58,000 | 58,000 | 58,000 | Various |
| **Vapor Intrusion Deep Soil Gas Screening Levels ($SG_{VI}$)** | | | 3.40E+07 | 22,000 | 4.10E+06 | 4.10E+05 | 76,000 | 3.50E+07 | 2.90E+08 | 18,000 | 5.90E+05 | NDC | 1.10E+08 | 2.0E+07 | 4.1E+06 | 3.90E+05 | 2.90E+07 | NDC | 1.50E+04 | NDC | 3.20E+05 | 1.30E+06 | 1.3E+06 | 2.00E+07 | 2.30E+05 | 2.90E+07 | 12,000 | 3.3E+08 | 5.80E+05 | 5.80E+05 | 5.80E+05 | Various |
| **DRAFT Acute Vapor Intrusion Screening Levels for Indoor Air and Soil Gas; Residential and Nonresidential Land Use, February 2013 ($\mu g/m^3$)** | | | | | | | | | | | | | | | | | | | | | | | | | | | | | | | | |
| **IRASL Indoor Air ($AIA_{VI}$)** | | | 62,000 | 1,300 | 6,200 | NDC | 150 | NDC | NDC | NDC | NDC | NDC | NDC | NDC | NDC | 14,000 | 13,000 | NDC | NDC | NDC | 21,000 | NDC | NDC | NDC | 20,000 | 37,000 | 4.20E+05 | NDC | 22,000 | 22,000 | 22,000 | Various |
| **IRASL Soil Gas ($ASG_{VI}$)** | | | 2.07E+06 | 43,000 | 2.07E+05 | NDC | 5,000 | NDC | NDC | NDC | NDC | NDC | NDC | NDC | NDC | 4.67E+05 | 4.33E+05 | NDC | NDC | NDC | 7.00E+05 | NDC | NDC | NDC | 6.67E+05 | 1.23E+06 | 1.40E+07 | NDC | 7.33E+05 | 7.33E+05 | 7.33E+05 | Various |

Applicable Screening Levels Exceeded

**BOLD** Value Exceeds Applicable Screening Levels

Value exceeds the IRASL Screening Level

bgs Below Ground Surface (feet)

ND Not detected at levels above the laboratory Method Detection Limit (MDL) or Minimum Quantitative Level (MQL)

NLV A hazardous substance is "Not Likely to Volatilize". This designation is given to any hazardous substance with a Henry's Law Constant of less than $1.0 \times 10^{-5}$ atm-$m^3$/mol.

ID "Insufficient Data" was available to the MDEQ in order to develop a criterion at the date of publication.

NDC "No Defined Criteria" by the Michigan Department of Environmental Quality (MDEQ)

[1] The IAC and SGC presented in this table are health-based values. The applicable IAC and SGC are based on the higher of the health-based value and the appropriate analytical reporting limit.

IRASL Immediate Response Acute Vapor Intrusion Screening Levels

RL Reporting Limit

E Indicates value exceeds calibration range

J Indicates estimated value

B Indicates analyte found in associated method blank

N Indicates presumptive evidence of a compound

TABLE 4
SUMMARY OF GROUNDWATER POTENTIOMETRIC SURFACE DATA
110 EAST BROAD STREET, LINDEN, MICHIGAN
PM Project #01-4982-0-002

| Well ID | Ground Elevation (Feet) | Top of Casing (TOC) Elevation (Feet) | Well Screen Interval (BGS) | Product Depth Below TOC (Feet) | Ground-water Depth Below TOC (Feet) | LNAPL Thickness (Feet) | *Potentio-metric Surface Elevation (Feet) | Product Depth Below TOC (Feet) | Ground-water Depth Below TOC (Feet) | LNAPL Thickness (Feet) | *Potentio-metric Surface Elevation (Feet) | Product Depth Below TOC (Feet) | Ground-water Depth Below TOC (Feet) | LNAPL Thickness (Feet) | *Potentio-metric Surface Elevation (Feet) | Product Depth Below TOC (Feet) | Ground-water Depth Below TOC (Feet) | LNAPL Thickness (Feet) | *Potentio-metric Surface Elevation (Feet) | Product Depth Below TOC (Feet) | Ground-water Depth Below TOC (Feet) | LNAPL Thickness (Feet) | *Potentio-metric Surface Elevation (Feet) | Product Depth Below TOC (Feet) | Ground-water Depth Below TOC (Feet) | LNAPL Thickness (Feet) | *Potentio-metric Surface Elevation (Feet) |
|---|---|---|---|---|---|---|---|---|---|---|---|---|---|---|---|---|---|---|---|---|---|---|---|---|---|---|---|
| | | | | 12/24/2014 | | | | 4/27/2015 | | | | 9/18/2015 | | | | 10/5/2015 | | | | 1/15/2016 | | | | 1/19/2016 | | | |
| MW-1 | 874.60 | 874.39 | 9.21-14.21 | 0.00 | 9.3 | 0.00 | 865.09 | 0.00 | 9.12 | 0.00 | 865.27 | 0.00 | 10.12 | 0.00 | 864.27 | 0.00 | 10.26 | 0.00 | 864.13 | | | | | 9.86 | 10.60 | 0.74 | 864.33 |
| MW-2 | 874.69 | 874.45 | 9.34-14.34 | 10.09 | 10.10 | 0.01 | 864.30 | 9.69 | 10.30 | 0.61 | 864.54 | 10.00 | 10.01 | 0.01 | 864.45 | 10.13 | 10.14 | 0.01 | 864.32 | | 10.00 | 0.58 ft in Bailer | | 0.00 | 9.98 | 0.00 | 864.47 |
| MW-3 | 874.59 | 874.34 | 9.05-14.05 | 0.00 | 9.95 | 0.00 | 864.39 | 9.54 | 10.16 | 0.62 | 864.74 | 9.87 | 9.88 | 0.01 | 864.46 | 9.96 | 9.97 | 0.005 | 864.37 | | 9.80 | 0.92 ft in Bailer | | 9.88 | 10.29 | 0.41 | 864.35 |
| MW-4 | 875.41 | 875.25 | 7.25-12.25 | 0.00 | 10.71 | 0.00 | 864.54 | 0.00 | 10.45 | 0.00 | 864.80 | 0.00 | 10.85 | 0.00 | 864.40 | 0.00 | 10.99 | 0.00 | 864.26 | | | | | 0.00 | 10.72 | 0.00 | 864.53 |
| MW-5 | 875.08 | 874.66 | 7.71-12.71 | 0.00 | 10.24 | 0.00 | 864.42 | 0.00 | 9.95 | 0.00 | 864.71 | 0.00 | 10.31 | 0.00 | 864.35 | 0.00 | 10.45 | 0.00 | 864.21 | | | | | 0.00 | 10.21 | 0.00 | 864.45 |
| MW-6 | 874.61 | 874.22 | 6.20-11.20 | | | | | | | | | Dry | Dry | Dry | Dry | 0.00 | 10.81 | 0.00 | 863.41 | 0.00 | 10.43 | 0.00 | 863.79 | 0.00 | 10.90 | 0.00 | 863.32 |
| MW-7 | 874.46 | 874.09 | 8.54-13.54 | | | | | | | | | 0.00 | 9.84 | 0.00 | 864.25 | 0.00 | 9.98 | 0.00 | 864.11 | | | | | 0.00 | 9.73 | 0.00 | 864.36 |
| MW-8 | 876.14 | 875.73 | 9.59-14.59 | | | | | | | | | 0.00 | 11.20 | 0.00 | 864.53 | 0.00 | 11.38 | 0.00 | 864.35 | | | | | 0.00 | 11.06 | 0.00 | 864.67 |
| MW-9 | 876.41 | 875.91 | 7.70-12.70 | | | | | | | | | 0.00 | 11.37 | 0.00 | 864.54 | 0.00 | 11.53 | 0.00 | 864.38 | | | | | 0.00 | 11.26 | 0.00 | 864.65 |
| MW-10 | 874.43 | 874.08 | 12.32-17.32 | | | | | | | | | Dry | Dry | Dry | Dry | 0.00 | 12.46 | 0.00 | 861.62 | 0.00 | 9.76 | 0.00 | 864.32 | 0.00 | 11.52 | 0.00 | 862.56 |
| MW-11 | 874.21 | 874.00 | 8.11-13.11 | | | | | | | | | 0.00 | 9.83 | 0.00 | 864.17 | 0.00 | 9.96 | 0.00 | 864.04 | | | | | 0.00 | 9.71 | 0.00 | 864.29 |
| MW-12 | 873.83 | 873.36 | 7.71-12.71 | | | | | | | | | 0.00 | 9.19 | 0.00 | 864.17 | 0.00 | 9.33 | 0.00 | 864.03 | | | | | 9.08 | 9.09 | 0.01 | 864.27 |
| MW-13 | 871.86 | 871.44 | 6.21-11.21 | | | | | | | | | 0.00 | 7.67 | 0.00 | 863.77 | 0.00 | 7.78 | 0.00 | 863.66 | | | | | 0.00 | 7.48 | 0.00 | 863.96 |
| MW-14 | 872.68 | 872.34 | 6.83-11.83 | | | | | | | | | 0.00 | 8.27 | 0.00 | 864.07 | 0.00 | 8.40 | 0.00 | 863.94 | | | | | 0.00 | 8.16 | 0.00 | 864.18 |
| MW-15-1 | 872.83 | 872.37 | 8.62-13.62 | | | | | | | | | | | | | | | | | | | | | 0.00 | 8.02 | 0.00 | 864.35 |
| MW-15-2 | 870.55 | 870.13 | 8.37-13.37 | | | | | | | | | | | | | | | | | | | | | 0.00 | 4.81 | 0.00 | 865.32 |
| MW-16 | 872.61 | 872.22 | 6.53-11.53 | | | | | | | | | | | | | | | | | 0.00 | 8.44 | 0.00 | 863.78 | 0.00 | 8.41 | 0.00 | 863.81 |
| MW-17 | 874.84 | 874.56 | 8.38-13.38 | | | | | | | | | | | | | | | | | 0.00 | 10.27 | 0.00 | 864.29 | 0.00 | 10.24 | 0.00 | 864.32 |
| MW-18 | 874.45 | 874.17 | 7.64-12.64 | | | | | | | | | | | | | | | | | 0.00 | 9.95 | 0.00 | 864.22 | 0.00 | 9.92 | 0.00 | 864.25 |
| MW-19 | 869.41 | 869.18 | 3.61-8.61 | | | | | | | | | | | | | | | | | 0.00 | 5.95 | 0.00 | 863.23 | 0.00 | 5.77 | 0.00 | 863.41 |
| MW-20 | 875.37 | 874.93 | 7.14-12.14 | | | | | | | | | | | | | | | | | 0.00 | 8.63 | 0.00 | 866.30 | 0.00 | 8.88 | 0.00 | 866.05 |

* Groundwater Elevation adjusted for Free Product Thickness (density of gasoline = 0.73 g/ml)

TABLE 5 (Page 1 of 2)
SUMMARY OF SOIL ANALYTICAL RESULTS
GASOLINE VOCs (BTEX Only) Gasoline Range Organics (GRO)
110 EAST BROAD STREET, LINDEN, MICHIGAN
PM PROJECT # 01-4982-0-002

| Volatile Organic Compounds (BTEX Only) & Gasoline Range Organics (GRO) (µg/Kg) | | | Benzene (B) | Toluene (T) | Ethylbenzene ( E) | Xylenes (X) | LNAPL Evaluation[1] | | | | | LNAPL Release Area | LNAPL Chemical Signature | |
|---|---|---|---|---|---|---|---|---|---|---|---|---|---|---|
| | | | | | | | Gasoline Range Organics (GRO) | Estimated GRO = 40 x BTEX | Gasoline LNAPL Present? | SVII RBSL **Not** Acceptable for Use Comparison? | <0.5% Saturation for SDC RBSL **Not** Acceptable for Use Comparison? | | T & X Dominant | E & X Dominant |
| Chemical Abstract Service Number (CAS#) | | | 71432 | 108883 | 100414 | 1330207 | | | >250,000**: GRO | >350,000**: GRO | >900,000**: GRO | | | |
| Sample ID | Sample Date | Sample Depth (feet bgs) | Listed VOCs | | | | | | Yes/No | | | | | |
| PM/ECT Samples | | | | | | | | | | | | | | |
| SB-1 (PM) | 12/18/14 | 9-10' | 8,100 | 150,000 | 71,000 | **380,000** | **2,800,000** | **24,364,000** | Yes | Yes | Yes | 110 East Bridge Street | | |
| SB-1 (ECT) | | | 24,000 | **350,000** | **160,000** | **840,000** | | **54,960,000** | Yes | Yes | Yes | | | |
| SB-1 (PM) | 12/18/14 | 11-12' | 830 | 460 | 4,300 | 7,800 | 37,000 | **535,600** | Yes | Yes | No | 110 East Bridge Street | | |
| SB-1 (ECT) | | | 4,100 | 6,100 | 5,100 | 18,600 | | **1,356,000** | Yes | Yes | Yes | | | |
| SB-1 (PM) | 12/18/14 | 19-20' | <50 | <50 | <50 | <150 | | <MDL | No | No | No | | | |
| SB-1 (ECT) | | | <71 | <71 | <71 | <140 | | <MDL | No | No | No | | | |
| SB-2 | 12/18/14 | 9-10' | 56,000 | **520,000** | **200,000** | **1,000,000** | **4,900,000** | **71,040,000** | Yes | Yes | Yes | 110 East Bridge Street | | |
| SB-2 | 12/18/14 | 10-11' | 960 | 960 | 1,300 | 4,900 | 46,000 | **324,800** | Yes | No | No | 110 East Bridge Street | | |
| SB-2 | 12/18/14 | 19-20' | <50 | 77 | 58 | 240 | | 15,000 | No | No | No | | | |
| SB-3 (PM) | 12/18/14 | 9-10' | 29,000 | 190,000 | **150,000** | **700,000** | **5,700,000** | **42,760,000** | Yes | Yes | Yes | 110 East Bridge Street | | |
| SB-3 (PM) | 12/18/14 | 10-11' | 2,700 | 680 | 980 | 1,300 | 16,000 | 226,400 | No | No | No | | | |
| SB-3 (ECT) | 12/18/14 | 19-20' | <72 | <72 | <72 | <140 | | <MDL | No | No | No | | | |
| SB-4 (PM) & | 12/18/14 | 9-10' | <50 | <50 | 480 | 1,300 | 110,000 | 71,200 | No | No | No | | | |
| Co-located A-2 | | | <50 | <50 | 630 | 1,500 | | 85,200 | No | No | No | | | |
| SB-4 (ECT) | | | <130 | <130 | 1,300 | 3,280 | | 183,200 | No | No | No | | | |
| SB-4 (PM) | 12/18/14 | 10-11' | 790 | 450 | 4,300 | 17,000 | 73,000 | **901,600** | Yes | Yes | Yes | 110 East Bridge Street | | |
| SB-4 (ECT) | | | 770 | 1,200 | 4,400 | 20,000 | | **1,054,800** | Yes | Yes | Yes | | | |
| SB-4 (ECT) | 12/18/14 | 19-20' | <70 | <70 | <70 | <140 | | <MDL | No | No | No | | | |
| SB-5 (PM) | 12/19/14 | 8-9' | <50 | <50 | <50 | <150 | 5,600 | <MDL | No | No | No | | | |
| SB-5 (ECT) | | | <64 | <64 | <64 | <140 | | <MDL | No | No | No | | | |
| SB-5 (PM) | 12/19/14 | 9-10' | <500 | 26,000 | 38,000 | **180,000** | **1,600,000** | **9,760,000** | Yes | Yes | Yes | 110 East Bridge Street | | |
| SB-5 (ECT) | | | <3,000 | 160,000 | **240,000** | **1,180,000** | | **63,200,000** | Yes | Yes | Yes | | | |
| SB-5 (ECT) | 12/19/14 | 19-20' | <73 | <73 | <73 | <150 | | <MDL | No | No | No | | | |
| SB-6 (PM) | 12/19/14 | 9-10' | 2,300 | 25,000 | 18,000 | 100,000 | **590,000** | **5,812,000** | Yes | Yes | Yes | 110 East Bridge Street | | |
| SB-6 (ECT) | | | 5,900 | 58,000 | 32,000 | **178,000** | | **10,956,000** | Yes | Yes | Yes | | | |
| SB-6 (PM) | 12/19/14 | 12-13' | 22,000 | 63,000 | 48,000 | **240,000** | **2,100,000** | **14,920,000** | Yes | Yes | Yes | 110 East Bridge Street | | |
| SB-6 (ECT) | | | 61,000 | 230,000 | **150,000** | **740,000** | | **47,240,000** | Yes | Yes | Yes | | | |
| SB-6 (PM) | 12/19/14 | 19-20' | <50 | <50 | <50 | <150 | | <MDL | No | No | No | | | |
| SB-6 (ECT) | | | <62 | 110 | 110 | 500 | | 28,800 | No | No | No | | | |
| SB-7 (PM) | 12/19/14 | 10-11' | 2,400 | 24,000 | 19,000 | 95,000 | **580,000** | **5,616,000** | Yes | Yes | Yes | 110 East Bridge Street | | |
| SB-7 (ECT) | | | 6,100 | 50,000 | 33,000 | **165,000** | | **10,164,000** | Yes | Yes | Yes | | | |
| SB-7 (PM) | 12/19/14 | 11-12' | 11,000 | 35,000 | 22,000 | 110,000 | **620,000** | **7,120,000** | Yes | Yes | Yes | 110 East Bridge Street | | |
| SB-7 (ECT) | | | 5,100 | 7,600 | 2,200 | 11,800 | | **1,068,000** | Yes | Yes | Yes | | | |
| SB-7 (PM) & | 12/19/14 | 19-20' | <50 | <50 | <50 | <150 | | <MDL | No | No | No | | | |
| Co-Located A-3 | | | <50 | <50 | <50 | <150 | | <MDL | No | No | No | | | |
| SB-7 (ECT) | | | <69 | <69 | <69 | <140 | | <MDL | No | No | No | | | |
| SB-8 (PM) | 12/19/14 | 9-10' | 4,400 | 79,000 | 61,000 | **320,000** | **1,700,000** | **18,576,000** | Yes | Yes | Yes | 110 East Bridge Street | | |
| SB-8 (ECT) | | | 2,400 | 47,000 | 44,000 | **236,000** | | **13,176,000** | Yes | Yes | Yes | | | |
| SB-8 (PM) | 12/19/14 | 10-11' | 1,800 | 3,400 | 1,400 | 6,800 | 35,000 | **536,000** | Yes | Yes | No | 110 East Bridge Street | | |
| SB-8 (ECT) | | | 3,100 | 12,000 | 5,100 | 26,000 | | **1,848,000** | Yes | Yes | Yes | | | |
| SB-8 (PM) | 12/19/14 | 19-20' | <50 | 280 | 200 | 840 | | 52,800 | No | No | No | | | |
| SB-8 (ECT) | | | 83 | 570 | 340 | 1,600 | | 102,920 | No | No | No | | | |
| MS-1 | 4/27/2015 | 3' | <50 | 66 | <50 | 350 | | 16,640 | No | No | No | | | |
| SB-9 | 09/17/15 | 7'-8' | <50 | <50 | <50 | <150 | <4,000 | <MDL | No | No | No | | | |
| SB-10 | 09/15/15 | 2'-3' | <50 | <50 | <50 | <150 | <4,000 | <MDL | No | No | No | | | |
| SB-10 | 09/16/15 | 9'-10' | <50 | <50 | <50 | <150 | <4,000 | <MDL | No | No | No | | | |
| SB-11 | 09/16/15 | 7'-8' | <50 | <50 | <50 | <150 | <4,000 | <MDL | No | No | No | | | |
| SB-12 | 09/17/15 | 7'-8' | <50 | <50 | <50 | <150 | <4,000 | <MDL | No | No | No | | | |
| SB-13 | 09/15/15 | 15'-16' | 8,500 | 28,000 | 46,000 | **200,000** | **690,000** | **11,300,000** | Yes | Yes | Yes | N. Broad St. Vacant Prop. | | |
| SB-13 | 09/15/15 | 19'-20' | <50 | <50 | <50 | 190 | <4,000 | <MDL | No | No | No | | | |
| SB-14 | 09/14/15 | 7'-8' | 260 | 2,500 | 1,900 | 11,000 | 52,000 | **626,400** | Yes | Yes | No | 110 East Bridge Street | | |
| SB-14 | 09/14/15 | 9'-10' | 2,900 | 60,000 | 53,000 | **290,000** | **2,100,000** | **16,236,000** | Yes | Yes | Yes | 110 East Bridge Street | | |
| SB-14 | 09/14/15 | 14'-15' | <50 | <50 | <50 | <150 | <4,000 | <MDL | No | No | No | | | |
| SB-15 | 09/14/15 | 2'-3' | 130 | 180 | 200 | 610 | 4,000 | 44,800 | No | No | No | | | |
| SB-15 | 09/14/15 | 8'-9' | 16,000 | 230,000 | 130,000 | **670,000** | **4,300,000** | **41,840,000** | Yes | Yes | Yes | 110 East Bridge Street | | |
| SB-15 | 09/14/15 | 19'-20' | <50 | <50 | <50 | <150 | <4,000 | <MDL | No | No | No | | | |
| SB-16 | 09/14/15 | 6'-7' | 200 | <50 | <50 | 260 | <4,000 | 18,400 | No | No | No | | | |
| SB-16 | 09/15/15 | 12'-13' | 54 | <50 | <50 | <150 | <4,000 | 2,160 | No | No | No | | | |
| SB-17 | 09/14/15 | 6'-7' | <50 | <50 | <50 | <150 | <4,000 | <MDL | No | No | No | | | |
| SB-18 | 09/16/15 | 7'-8' | <50 | <50 | <50 | <150 | <4,000 | <MDL | No | No | No | | | |
| SB-19 | 01/14/16 | 6'-7' | <50 | <50 | <50 | <150 | <4,000 | <MDL | No | No | No | | | |
| SB-19 | 01/14/16 | 19'-20' | <50 | <50 | <50 | <150 | <4,000 | <MDL | No | No | No | | | |
| SB-20 | 01/12/16 | 8'-9' | <50 | <50 | <50 | <150 | <4,000 | <MDL | No | No | No | | | |
| SB-22 | 01/12/16 | 4'-5' | <50 | <50 | <50 | <150 | <4,000 | <MDL | No | No | No | | | |
| SB-21 & | 01/14/16 | 7-8' | <50 | <50 | <50 | <150 | <4,000 | <MDL | No | No | No | | | |
| Co-Locate A-2 | | | <50 | <50 | <50 | <150 | <4,000 | <MDL | No | No | No | | | |
| SG-14 (SB) | 01/12/16 | 6'-7' | <50 | <50 | <50 | <150 | <4,000 | <MDL | No | No | No | | | |

**Cleanup Criteria Requirements for Response Activity (R 299.1 - R 299.50)**
**Generic Soil Cleanup Criteria Tables 2 and 3: Residential and Non-Residential Part 201 Generic Cleanup Criteria and Screening Levels/Part 213 Risk-Based Screening Levels, December 30, 2013**
**MDEQ Guidance Document For The Vapor Intrusion Pathway, Policy and Procedure Number: 09-017, Appendix D Vapor Intrusion Screening Values, May 2013**

| Residential (µg/Kg) | | | | |
|---|---|---|---|---|
| **Statewide Default Background Levels** | NA | NA | NA | NA |
| **Drinking Water Protection (Res DWP)** | 100 | 16,000 | 1,500 | 5,600 |
| **Groundwater Surface Water Interface Protection (GSIP)** | 4,000 (X) | 5,400 | 360 | 820 |
| **Soil Volatilization to Indoor Air Inhalation (Res SVII)** | 1,600 | 3.3E+05 (C) | 87,000 | 6.3E+06 (C) |
| **Ambient Air Infinite Source Volatile Soil Inhalation (Res VSI)** | 13,000 | 2.80E+06 | 7.20E+05 | 4.60E+07 |
| **Ambient Air Finite VSI for 5 Meter Source Thickness** | 34,000 | 5.10E+06 | 1.00E+06 | 8.10E+07 |
| **Ambient Air Finite VSI for 2 Meter Source Thickness** | 79,000 | 1.20E+07 | 2.20E+06 | 1.30E+08 |
| **Ambient Air Particulate Soil Inhalation (Res PSI)** | 3.60E+08 | 2.70E+10 | 1.00E+10 | 2.90E+11 |
| **Direct Contact (Res DC)** | 1.80E+05 | 5.0E+07 (C) | 2.2E+07 (C) | 4.1E+08 (C) |
| **Nonresidential (µg/Kg)** | | | | |
| **Drinking Water Protection (Nonres DWP)** | 100 | 16,000 | 1,500 | 5,600 |
| **Soil Volatilization to Indoor Air Inhalation (Nonres SVII)** | 8,400 | 6.1E+05 (C) | 4.6E+05 (C) | 1.2E+07 (C) |
| **Ambient Air Infinite Source Volatile Soil Inhalation (Nonres VSI)** | 45,000 | 3.30E+06 | 2.40E+06 | 5.40E+07 |
| **Ambient Air Finite VSI for 5 Meter Source Thickness** | 99,000 | 3.60E+07 | 3.10E+06 | 6.50E+07 |
| **Ambient Air Finite VSI for 2 Meter Source Thickness** | 2.30E+05 | 3.60E+07 | 6.50E+06 | 1.30E+08 |
| **Ambient Air Particulate Soil Inhalation (Nonres PSI)** | 4.70E+08 | 1.20E+10 | 1.30E+10 | 1.30E+11 |
| **Direct Contact (Nonres DC)** | 6.40E+05 (C) | 1.6E+08 (C) | 7.1E+07 (C) | 1.0E+09 (C) |
| **Screening Levels (µg/Kg)** | | | | |
| **Soil Saturation Concentration Screening Levels (Csat)** | 4.00E+05 | 2.50E+05 | 1.40E+05 | 1.50E+05 |
| **Residential Vapor Intrusion Soil Screening Levels ($S_{VI,res}$)** | 50 | 10,000 | 200 | 290 |
| **Nonresidential Vapor Intrusion Soil Screening Levels ($S_{VI,nr}$)** | 84.5 | 1.69E+05 | 4,000 | 4,900 |

Soil Saturation Concentration (Csat) Screening Level Exceeded
Underline 40 x BTEX Concentration Screening Level Exceeded
**BOLD** Value Exceeds Soil Csat or 40 x Total BTEX Concentration Screening Levels
bgs Below Ground Surface (feet)
ND Not detected at levels above laboratory method detection limit (MDL)
(ECT) Split sampled collected by Environmental Consulting and Technology, Inc. on behalf of the Michigan Department of Environmental Quality (MDEQ).
** MDEQ LNAPL Screening Level above which Residual LNAPL is assumed to be present, or above which the Tier 1 Soil Volatilization to Indoor Air Inhalation (SVII) and/or Direct Contact (DC) Risk-Based Screening Levels (RBSLs) no longer apply.
1 Non-Aqueous Phase Liquid (NAPL) Characterization, Remediation, and Management for Petroleum Releases, MDEQ, June 2014.

**TABLE 5 (Page 2 of 2)**
**SUMMARY OF SOIL ANALYTICAL RESULTS**
**GASOLINE VOCs (BTEX Only)**
**110 EAST BROAD STREET, LINDEN, MICHIGAN**
**PM PROJECT # 01-4982-0-002**

| Volatile Organic Compounds (BTEX Only) (µg/Kg) | | | Benzene (B) | Toluene (T) | Ethylbenzene ( E) | Xylenes (X) | LNAPL Evaluation[1] | | | | | LNAPL Release Area | LNAPL Chemical Signature | |
|---|---|---|---|---|---|---|---|---|---|---|---|---|---|---|
| | | | | | | | ECT Dye Shake Testing | Estimated GRO = 40 x BTEX | Gasoline LNAPL Present? | SVII RBSL Not Acceptable for Use Comparison? | <0.5% Saturation for SDC RBSL Not Acceptable for Use Comparison? | | T & X Dominant | E & X Dominant |
| Chemical Abstract Service Number (CAS#) | | | 71432 | 108883 | 100414 | 1330207 | | | >250,000**: GRO | >350,000**: GRO | >900,000**: GRO | | | |
| Sample ID | Sample Date | Sample Depth (feet bgs) | Listed VOCs | | | | | | Yes/No | | | | | |
| **ECT Samples - MDEQ 2014 Subsurface Investigation** | | | | | | | | | | | | | | |
| GP-1 | 07/30/14 | 8.5-9.0' | <61 | <61 | <61 | <181 | Negative | <MDL | No | No | No | | | |
| GP-1 | 07/30/14 | 13.0' | <61 | <61 | <61 | <181 | | <MDL | No | No | No | | | |
| GP-2 | 07/30/14 | 9.0-10.0' | 1,500 | <61 | 370 | <181 | Negative | 74,800 | No | No | No | | | |
| GP-2 | 07/30/14 | 14.0' | <59 | <59 | <59 | <179 | | <MDL | No | No | No | | | |
| GP-3 | 07/30/14 | 7.0-8.0' | 940 | 2,900 | 13,000 | **253,000** | Negative, LNAPL Obs. on Sampler | **10,793,600** | Yes | Yes | Yes | N. Broad St. Vacant Prop. | | |
| GP-3 | 07/30/14 | 15.0' | <60 | 120 | 130 | 1,210 | | 58,400 | No | No | No | | | |
| GP-4 | 07/30/14 | 9.0' | <67 | <67 | <67 | <197 | Negative | <MDL | No | No | No | | | |
| GP-5 | 07/30/14 | 8.0' | <60 | <60 | <60 | <180 | Negative | <MDL | No | No | No | | | |
| GP-5 | 07/30/14 | 13.0' | <61 | <61 | <61 | <181 | | <MDL | No | No | No | | | |
| GP-6 | 07/30/14 | 8.0' | <60 | <60 | <60 | <180 | Negative | <MDL | No | No | No | | | |
| GP-6 | 07/30/14 | 10.0' | <61 | <61 | <61 | <181 | | <MDL | No | No | No | | | |
| GP-7 | 07/31/14 | 9.0' | 1,100 | <67 | 80 | <197 | Negative | 47,200 | No | No | No | | | |
| GP-7 | 07/31/14 | 15.0' | <62 | <62 | <62 | <182 | | <MDL | No | No | No | | | |
| GP-8 | 07/31/14 | 9.0' | <60 | <60 | <60 | <180 | Negative | <MDL | No | No | No | | | |
| GP-9 | 07/31/14 | 9.5' | 4,800 | 9,600 | 12,000 | 57,000 | Negative | **3,736,000** | Yes | Yes | Yes | 110 East Bridge Street | | |
| GP-10 | 07/31/14 | 5.0-6.0' | 530 | 80 | 730 | 3,070 | | 176,400 | No | No | No | | | |
| GP-10 | 07/31/14 | 10.0' | 22,000 | 220,000 | 80,000 | **480,000** | Positive | **32,080,000** | Yes | Yes | Yes | 110 East Bridge Street | | |
| GP-11 | 07/31/14 | 10.0' | 1,100 | 2,700 | 3,000 | 14,000 | Negative | **832,000** | Yes | Yes | No | 110 East Bridge Street | | |
| GP-12 | 07/31/14 | 10.0' | <71 | <71 | <71 | 221 | Negative | 8,840 | No | No | No | | | |
| GP-13 | 08/01/14 | 14.5' | <69 | <69 | <69 | <209 | Negative | <MDL | No | No | No | | | |
| GP-14 | 08/01/14 | 10.0' | 31,000 | **290,000** | 110,000 | **540,000** | Positive | **38,840,000** | Yes | Yes | Yes | 110 East Bridge Street | | |
| GP-15 | 08/01/14 | 10.0' | 67,000 | **400,000** | 140,000 | **690,000** | Positive | **51,880,000** | Yes | Yes | Yes | 110 East Bridge Street | | |
| GP-15 | 08/01/14 | 17.0' | <62 | <62 | <62 | <182 | | <MDL | No | No | No | | | |
| GP-16 | 08/01/14 | 10.0' | <61 | <61 | <61 | <181 | Negative | <MDL | No | No | No | | | |
| GP-17 | 08/01/14 | 9.5' | 2,800 | 14,000 | 4,400 | 21,100 | Positive @ 13-14' | **1,692,000** | Yes | Yes | Yes | 110 East Bridge Street | | |
| GP-18 | 08/01/14 | 9.0-10.0' | <62 | <62 | <62 | <182 | | <MDL | No | No | No | | | |
| GP-18 | 08/01/14 | 15.0' | <57 | <57 | <57 | <167 | Negative | <MDL | No | No | No | | | |
| GP-19 | 08/01/14 | 9.0' | <62 | <62 | <62 | <182 | Negative | <MDL | No | No | No | | | |
| GP-20 | 08/01/14 | 9.0' | <69 | <69 | <69 | <209 | Negative | <MDL | No | No | No | | | |
| **MDEQ Samples** | | | | | | | | | | | | | | |
| HA-15-1 | 11/11/15 | 7.5-8.0 | <77 | <77 | <77 | <151 | | <MDL | No | No | No | | | |
| GP-15-1 | 11/10/15 | 10.5-11.0 | <61 | <61 | <51 | <122 | | <MDL | No | No | No | | | |
| GP-15-3 | 11/10/15 | 9.8-10.0 | 670 | 140 | 1,600 | 3,200 | | 224,400 | No | No | No | | | |
| GP-15-4 | 11/10/15 | 5.5-6.0 | <62 | <62 | 890 | 3,850 | | 189,600 | No | No | No | | | |
| GP-15-7 | 11/11/15 | 4.5-5.5 | <750 | 2,000 | <750 | 21,600 | | **944,000** | Yes | Yes | Yes | Hamrick Street | | |
| GP-15-9 | 11/11/15 | 8.0-8.25 | <290 | <290 | <290 | <880 | | <MDL | No | No | No | | | |
| GP-15-14 | 11/10/15 | 9.5-10.0 | 39,000 | **320,000** | **510,000** | **2,450,000** | | **132,760,000** | Yes | Yes | Yes | West Broad/Walmar Sts. | | |
| GP-15-17 | 11/12/15 | 7.5-8.0 | <2,600 | <2,600 | 13,000 | **187,000** | | **8,000,000** | Yes | Yes | Yes | West Broad/Walmar Sts. | | |
| GP-15-20 | 11/12/15 | 9.0-9.5 | <1,200 | <1,200 | 18,000 | 107,600 | | **5,024,000** | Yes | Yes | Yes | West Broad/Walmar Sts. | | |
| GP-15-16 | 11/12/15 | 9.25-9.5 | ND | ND | ND | ND | | <MDL | No | No | No | | | |
| GP-15-18 | 11/12/15 | 9.25-9.5 | ND | ND | ND | ND | | <MDL | No | No | No | | | |
| GP-15-19 | 11/12/15 | 9.5-9.75 | ND | ND | ND | ND | | <MDL | No | No | No | | | |
| GP-15-15 | 11/11/15 | 9.0-9.5 | ND | ND | ND | ND | | <MDL | No | No | No | | | |
| GP-15-6 | 11/11/15 | 5.0-5.5 | ND | ND | ND | ND | | <MDL | No | No | No | | | |
| GP-15-8 | 11/11/15 | 5.0-5.25 | ND | ND | ND | ND | | <MDL | No | No | No | | | |
| GP-15-10 | 11/11/15 | 8.5-9.0 | ND | ND | ND | ND | | <MDL | No | No | No | | | |
| GP-15-11 | 11/11/15 | 9.0-9.5 | ND | ND | ND | ND | | <MDL | No | No | No | | | |
| GP-15-12 | 11/11/15 | 6.0-6.5 | ND | ND | ND | ND | | <MDL | No | No | No | | | |
| GP-15-13 | 11/11/15 | 9.0-9.5 | ND | ND | ND | ND | | <MDL | No | No | No | | | |
| GP-15-14 | 11/11/15 | 9.5-10.0 | ND | ND | ND | ND | | <MDL | No | No | No | | | |
| GP-15-2 | 11/10/15 | 9.5-10.0 | ND | ND | ND | ND | | <MDL | No | No | No | | | |
| GP-15-5 | 11/10/15 | 6.0-6.5 | ND | ND | ND | ND | | <MDL | No | No | No | | | |
| **Atwell LLC Samples** | | | | | | | | | | | | | | |
| AB-2 | 10/17/12 | 10.5 | ND | ND | 25,000 | 36,000 | | **2,440,000** | Yes | Yes | Yes | N. Broad St. Vacant Prop. | | |
| AB-4 | 10/17/12 | 8.0 | 2,000 | 11,000 | 12,000 | 60,000 | | **3,400,000** | Yes | Yes | Yes | N. Broad St. Vacant Prop. | | |
| AB-5 | 10/17/12 | 9.0 | ND | ND | ND | ND | | <MDL | No | No | No | | | |
| AB-6 | 10/17/12 | 10.0 | 1,300 | 2,000 | 41,000 | **240,000** | | **11,372,000** | Yes | Yes | Yes | N. Broad St. Vacant Prop. | | |

**Cleanup Criteria Requirements for Response Activity (R 299.1 - R 299.50)**
**Generic Soil Cleanup Criteria Tables 2 and 3: Residential and Non-Residential Part 201 Generic Cleanup Criteria and Screening Levels/Part 213 Risk-Based Screening Levels, December 30, 2013**
**MDEQ Guidance Document For The Vapor Intrusion Pathway, Policy and Procedure Number: 09-017, Appendix D Vapor Intrusion Screening Values, May 2013**

| Residential (µg/Kg) | | | | |
|---|---|---|---|---|
| **Statewide Default Background Levels** | NA | NA | NA | NA |
| **Drinking Water Protection (Res DWP)** | 100 | 16,000 | 1,500 | 5,600 |
| **Groundwater Surface Water Interface Protection (GSIP)** | 4,000 (X) | 5,400 | 360 | 820 |
| **Soil Volatilization to Indoor Air Inhalation (Res SVII)** | 1,600 | 3.3E+05 (C) | 87,000 | 6.3E+06 (C) |
| **Ambient Air Infinite Source Volatile Soil Inhalation (Res VSI)** | 13,000 | 2.80E+06 | 7.20E+05 | 4.60E+07 |
| **Ambient Air Finite VSI for 5 Meter Source Thickness** | 34,000 | 5.10E+06 | 1.00E+06 | 5.10E+07 |
| **Ambient Air Finite VSI for 2 Meter Source Thickness** | 79,000 | 1.20E+07 | 2.20E+06 | 1.20E+08 |
| **Ambient Air Particulate Soil Inhalation (Res PSI)** | 3.80E+08 | 2.70E+10 | 1.00E+10 | 2.50E+11 |
| **Direct Contact (Res DC)** | 1.80E+05 | 5.0E+07 (C) | 2.2E+07 (C) | 4.1E+08 (C) |
| **Nonresidential (µg/Kg)** | | | | |
| **Drinking Water Protection (Nonres DWP)** | 100 | 16,000 | 1,500 | 5,600 |
| **Soil Volatilization to Indoor Air Inhalation (Nonres SVII)** | 8,400 | 6.1E+05 (C) | 4.6E+05 (C) | 1.2E+07 (C) |
| **Ambient Air Infinite Source Volatile Soil Inhalation (Nonres VSI)** | 45,000 | 3.30E+06 | 2.40E+06 | 5.40E+07 |
| **Ambient Air Finite VSI for 5 Meter Source Thickness** | 99,000 | 3.60E+07 | 3.10E+06 | 6.50E+07 |
| **Ambient Air Finite VSI for 2 Meter Source Thickness** | 2.30E+08 | 3.60E+07 | 6.50E+06 | 1.30E+08 |
| **Ambient Air Particulate Soil Inhalation (Nonres PSI)** | 4.70E+08 | 1.20E+10 | 1.30E+10 | 1.30E+11 |
| **Direct Contact (Nonres DC)** | 8.40E+05 (C) | 1.6E+08 (C) | 7.1E+07 (C) | 1.0E+09 (C) |
| **Screening Levels (µg/Kg)** | | | | |
| **Soil Saturation Concentration Screening Levels (Csat)** | 4.00E+05 | 2.50E+05 | 1.40E+05 | 1.50E+05 |
| **Residential Vapor Intrusion Soil Screening Levels ($S_{VI-res}$)** | 50 | 10,000 | 200 | 290 |
| **Nonresidential Vapor Intrusion Soil Screening Levels ($S_{VI-nr}$)** | 84.5 | 1.59E+05 | 4,000 | 4,900 |

[ ] Soil Saturation Concentration (Csat) Screening Level Exceeded
Underline 40 x BTEX Concentration Screening Level Exceeded
BOLD Value Exceeds Soil Csat or 40 x Total BTEX Concentration Screening Levels
bgs Below Ground Surface (feet)
ND Not detected at levels above laboratory method detection limit (MDL)
(ECT) Split sampled collected by Environmental Consulting and Technology, Inc. on behalf of the Michigan Department of Environmental Quality (MDEQ).
** MDEQ LNAPL Screening Level above which Residual LNAPL is assumed to be present, or above which the Tier 1 Soil Volatilization to Indoor Air Inhalation (SVII) and/or Direct Contact (DC) Risk-Based Screening Levels (RBSLs) no longer apply.
1 Non-Aqueous Phase Liquid (NAPL) Characterization, Remediation, and Management for Petroleum Releases, MDEQ, June 2014.

TABLE 6
SUMMARY OF GROUNDWATER ANALYTICAL RESULTS & CHEMICAL SIGNATURE
Listed VOCs (2012 - 2016)
110 EAST BROAD STREET, LINDEN, MICHIGAN
PM PROJECT # 01-4982-0-002

| Volatile Organic Compounds (VOCs) (µg/L) | | | | Benzene (B) | Toluene (T) | Ethylbenzene (E) | Xylenes (X) | Methyl-tert-butyl ether (MTBE) | 1,2,3-Trimethylbenzene (TMB) | 1,2,4-TMB | 1,3,5-TMB | Total Listed VOCs | Chemical Signature | | |
|---|---|---|---|---|---|---|---|---|---|---|---|---|---|---|---|
| Chemical Abstract Service Number (CAS#) | | | | 71432 | 108883 | 100414 | 1330207 | 1634044 | 526738 | 95636 | 108678 | | BTEX Dominant | B Dominant | MTBE Present |
| Sample ID | Sample Date | Screen Depth (feet bgs) | Depth to Groundwater (feet bgs) | Listed VOCs | | | | | | | | | | | |
| **North Broad Street Vacant Property Plume Area** | | | | | | | | | | | | | | | |
| AB-2W (Atwell) | 10/17/12 | | | 4,300 | 2,700 | 870 | 3,400 | <100 | NA | 620 | 240 | 12,130 | | | |
| AB-5W (Atwell) | 10/17/12 | | | <1 | <1 | <1 | <3 | <1 | NA | <1 | <1 | <MDL | | | |
| AB-6W (Atwell) | 10/17/12 | | | 390 | 110 | 1,200 | 5,300 | <100 | NA | 1,500 | 600 | 9,100 | | | |
| GP-1W | 07/30/14 | 7.0-12.0 | 9 | 1,900 | <10 | 94 | 91 | <10 | <10 | 110 | <10 | 2,195 | | | |
| & Duplicate | | | | 2,300 | <10 | 52 | 84 | 11 | 19 | 100 | <10 | 2,566 | | | |
| GP-1/TMW | 08/21/14 | 7.0-12.0 | 6.22 | 1,900 | <10 | 85 | 84 | <10 | <10 | 93 | <10 | 2,162 | | | |
| Influent (109 N Bridge) | 11/12/15 | | | 4.3 | <1 | <1 | <3 | 1.2 | <1 | <1 | <1 | 5.5 | | | |
| GP-2W | 07/30/14 | 9.0-12.5 | 10 | 4,100 | <20 | 610 | 200 | <20 | <20 | 410 | <20 | 5,320 | | | |
| 109 N Bridge St. S Sump | Jun-14 | NA | | 710 | ND | ND | 2 | Reported MTBE & TMBs | | | | | | | |
| GP-3W | 07/30/14 | 7.5-11 | 9 | 3,500 | 1,600 | 1,000 | 25,500 | <50 | <50 | 4,100 | 1,100 | 37,900 | | | |
| GP-4W | 07/30/14 | 12.5-15 | 9.5 | 4,200 | 80 | 280 | 254 | 5 | <1 | 130 | 2 | 4,951 | | | |
| GP-15-2 | 11/10/15 | | | 2,600 | <10 | <10 | <30 | 15 | 10 | <10 | <10 | 2,625 | | | |
| GP-15-2/MW-15-1 | 11/18/15 | | | 250 | <1 | <1 | <3 | 2.2 | <1 | <1 | <1 | 252 | | | |
| GP-5W | 07/30/14 | 7.0-10.5 | 8 | <1 | <1 | <1 | <3 | 1 | <1 | <1 | <1 | 1 | | | |
| AB-1W (Atwell) | 10/17/12 | | | <1 | <1 | <1 | <3 | <1 | NA | <1 | <1 | <MDL | | | |
| GP-6W | 07/30/14 | 6.0-9.5 | 8 | <1 | <1 | <1 | <3 | <1 | <1 | <1 | <1 | <MDL | | | |
| GP-7W | 07/31/14 | 6.0-9.5 | 9 | 5,000 | 110 | 88 | 109 | 4 | <1 | 35 | 3 | 5,349 | | | |
| MW-13 (PM) | 10/05/15 | 6.21-11.21 | 8.20 | 3,800 | <50 | <50 | <200 | <50 | <50 | <50 | <50 | 3,800 | | | |
| MW-13 (ECT) | | | | 3,600 | 1.2 | 3.7 | 5.8 | 6.3 | 11 | <1 | <1 | 3,628 | | | |
| GP-8W | 07/31/14 | 7.0-10.5 | 9 | <1 | <1 | <1 | <3 | 28 | <1 | <1 | <1 | 28 | | | |
| GP-18W | 08/01/14 | 12.5-15 | 5.5 | <1 | <1 | <1 | <3 | <1 | <1 | <1 | <1 | <MDL | | | |
| GP-15-1 | 11/10/15 | | | <1 | <1 | <1 | <3 | <1 | <1 | <1 | <1 | <MDL | | | |
| HA-15-1 | 11/11/15 | | | 2,000 | <10 | <10 | <30 | <10 | <10 | <10 | <10 | 2,000 | | | |
| GP-15-3/MW-15-2 | 11/18/15 | | | 790 | 52 | 91 | 433 | 17 | 51 | 160 | 47 | 1,641 | | | |
| MW-10 (PM) | 10/05/15 | 12.32-17.32 | 12.83 | Bailed Dry | | | | | | | | NA | | | |
| MW-10 (PM) | 01/15/16 | | 10.12 | 74 | <10 | <10 | 77 | <10 | 30 | 33 | 26 | 240 | | | |
| MW-16 (PM) | 01/15/16 | 6.53-11.53 | 8.80 | <1 | <1 | <1 | 5 | <1 | <1 | <1 | <1 | 5 | | | |
| MW-17 (PM) | 01/15/16 | 8.38-13.38 | 10.55 | <1 | <1 | 5 | 27 | <1 | <1 | 11 | <1 | 43 | | | |
| MW-20 (PM) | 01/15/16 | 7.14-12.14 | 9.12 | <1 | <1 | 1 | 7 | <1 | <1 | <1 | <1 | 8 | | | |
| 208 N Bridge St. MDEQ CB-2 | June 2014 | NA | | 5.0 | 1.0 | 10 | ND | Reported MTBE & TMBs | | | | | | | |
| **Beacon & Bridge #8, 110 East Broad Street Plume Area** | | | | | | | | | | | | | | | |
| MW-1 (PM) | 12/24/14 | 9.21-14.21 | 9.5 | 130 | 420 | 150 | 660 | <5 | 60 | 190 | 51 | 1,661 | | | |
| MW-1 (ECT) | | | | 97 | 260 | 110 | 430 | <1 | 32 | 130 | 36 | 1,095 | | | |
| MW-1 (PM) | 10/05/15 | | 10.47 | 5,400 | 870 | 2,400 | 3,700 | <50 | 360 | 1,000 | 200 | 13,930 | | | |
| MW-1 (ECT) | | | | 3,400 | 870 | 2,400 | 3,790 | <20 | 270 | 1,100 | 210 | 12,040 | | | |
| MW-2 (PM) | 12/24/14 | 9.34-14.34 | 10.39 | LNAPL | LNAPL | LNAPL | LNAPL | LNAPL | LNAPL | LNAPL | LNAPL | LNAPL | | | |
| MW-2 (PM) | 10/05/15 | | 10.37 | LNAPL | LNAPL | LNAPL | LNAPL | LNAPL | LNAPL | LNAPL | LNAPL | LNAPL | | | |
| MW-3 (PM) | 12/24/14 | 9.05-14.05 | 10.20 | 14,000 | 430 | 1,700 | 1,300 | <50 | <50 | 160 | <50 | 17,590 | | | |
| & Co-Locate A-2 | | | | 15,000 | 460 | 1,800 | 1,400 | <50 | 320 | 190 | <50 | 19,170 | | | |
| MW-3 (ECT) | | | | 15,000 | 530 | 1,600 | 1,590 | <20 | 240 | 250 | 61 | 19,261 | | | |
| MW-3 (PM) | 10/05/15 | | 10.22 | LNAPL | LNAPL | LNAPL | LNAPL | LNAPL | LNAPL | LNAPL | LNAPL | LNAPL | | | |
| GP-9W | 07/31/14 | 7.0-12.0 | 9.5 | 13,000 | 6,400 | 2,900 | 10,300 | <20 | <20 | 2,000 | 530 | 35,130 | | | |
| GP-9/TMW | 08/21/14 | 7.0-12.0 | 9.08 | 14,000 | 2,400 | 1,900 | 4,500 | <20 | 420 | 1,200 | 310 | 24,730 | | | |
| GP-14W | 08/01/14 | 6.0-11.0 | 10 | 9,900 | 24,000 | 1,800 | 8,700 | <100 | <100 | 1,700 | 500 | 46,600 | | | |
| MW-4 (PM) | 12/24/14 | 7.25-12.25 | 10.96 | 4,500 | 1,200 | 4,000 | 14,000 | <50 | 890 | 2,600 | 610 | 27,800 | | | |
| MW-4 (ECT) | | | | 4,400 | 1,200 | 3,500 | 12,500 | <10 | 630 | 2,200 | 550 | 24,980 | | | |
| MW-4 (PM) | 10/05/15 | | 11.24 | 3,900 | 210 | 3,600 | 5,600 | <20 | 960 | 2,400 | 490 | 17,160 | | | |
| MW-4 (ECT) | | | | 3,800 | 210 | 3,100 | 4,999 | <50 | 560 | 2,100 | 450 | 15,219 | | | |
| MW-5 (PM) | 12/24/14 | 7.71-12.71 | 9.70 | 310 | 14,000 | 4,600 | 20,000 | <50 | 1,100 | 3,100 | 750 | 43,860 | | | |
| MW-5 (ECT) | | | | 260 | 13,000 | 3,900 | 16,400 | <5 | 730 | 2,700 | 640 | 37,630 | | | |
| MW-5 (PM) | 10/05/15 | | 9.91 | 240 | 11,000 | 3,500 | 16,000 | <100 | 940 | 2,400 | 620 | 34,700 | | | |
| MW-5 (ECT) | | | | 210 | 11,000 | 3,600 | 14,900 | <10 | 690 | 2,500 | 630 | 33,430 | | | |
| MW-6 (PM) | 10/05/15 | 6.20-11.20 | 10.23 | Bailed Dry | | | | | | | | NA | | | |
| MW-6 (PM) | 01/15/16 | | 10.82 | <1 | <1 | <1 | 3 | <1 | <1 | <1 | <1 | 3 | | | |
| MW-7 (PM) | 10/05/15 | 8.54-13.54 | 10.36 | 43 | <1 | <1 | <3 | <1 | <1 | <1 | <1 | 43 | | | |
| MW-7 (ECT) | | | | 52 | <1 | <1 | <3 | <1 | <1 | <1 | <1 | 52 | | | |
| GP-16W | 08/01/14 | 7.0-12.0 | 10 | 2 | <1 | <1 | <3 | <1 | <1 | <1 | <1 | 2 | | | |
| & Duplicate | | | | 2 | <1 | <1 | <3 | <1 | <1 | <1 | <1 | 2 | | | |
| GP-16/TMW | 08/21/14 | 7.0-12.0 | 8.98 | <1 | <1 | <1 | <3 | <1 | <1 | <1 | <1 | <MDL | | | |
| & Duplicate | | | | <1 | <1 | <1 | <3 | <1 | <1 | <1 | <1 | <MDL | | | |
| MW-8 (PM) | 10/05/15 | 9.59-14.59 | 11.79 | <1 | <1 | <1 | <3 | <1 | <1 | <1 | <1 | <MDL | | | |
| MW-9 (PM) | 10/05/15 | 7.70-12.70 | 12.03 | <1 | <1 | <1 | <3 | <1 | <1 | <1 | <1 | <MDL | | | |
| MW-9 (ECT) | | | | <1 | <1 | <1 | <3 | <1 | <1 | <1 | <1 | <MDL | | | |
| MW-11 (PM) | 10/05/15 | 8.11-13.11 | 10.24 | 11,000 | 430 | 280 | 680 | <100 | <100 | 230 | <100 | 12,620 | | | |
| MW-11 (ECT) | | | | 9,900 | 490 | 300 | 750 | <10 | 77 | 240 | 49 | 11,806 | | | |
| MW-12 (PM) | 10/05/15 | 7.71-12.71 | 9.74 | 2,400 | 3,100 | 930 | 2,900 | <20 | 260 | 660 | 170 | 10,420 | | | |
| MW-12 (ECT) | | | | 2,300 | 3,200 | 870 | 2,540 | <10 | 150 | 600 | 160 | 9,820 | | | |
| MW-14 (PM) | 10/05/15 | 6.83-11.83 | 8.75 | <1 | <1 | <1 | <3 | <1 | <1 | <1 | <1 | <MDL | | | |
| MW-14 (ECT) | | | | <1 | <1 | <1 | <3 | <1 | <1 | <1 | <1 | <MDL | | | |
| MW-18 (PM) | 01/15/16 | 7.64-12.64 | 10.22 | <1 | 7 | 4 | 19 | <1 | 1 | 8 | 2 | 41 | | | |
| MW-19 (PM) | 01/15/16 | 3.61-8.61 | 6.18 | <1 | <1 | <1 | <3 | <1 | <1 | <1 | <1 | <MDL | | | |
| TMW-18 (PM) | 09/16/15 | 7.0-12.0 | 9.88 | <1 | <1 | <1 | <3 | <1 | <1 | <1 | <1 | <MDL | | | |
| GP-10W | 07/31/14 | 7.25-12.5 | 10 | 10,000 | 8,200 | 3,200 | 9,900 | <50 | <50 | 2,200 | 350 | 33,850 | | | |
| GP-13W | 08/01/14 | 7.5-12.5 | 10 | 31 | 2 | 110 | <3 | <1 | <1 | 18 | <1 | 161 | | | |
| GP-13/TMW | 08/21/14 | 7.5-12.5 | 10.64 | 35 | 2.2 | 97 | <3 | <1 | 11 | 1.7 | <1 | 147 | | | |
| & Duplicate | | | | 35 | 2.1 | 98 | <3 | <1 | 12 | 2 | <1 | 149 | | | |
| GP-17W | 08/01/14 | 7.0-12.0 | 9.5 | 5,000 | 6,800 | 1,500 | 6,300 | <50 | <1 | 1,400 | 390 | 21,390 | | | |
| GP-19W | 08/01/14 | 7.0-12.0 | 9 | <1 | <1 | <1 | <3 | <1 | <1 | <1 | <1 | <MDL | | | |
| GP-19/TMW | 08/20/14 | 7.0-12.0 | 8.06 | <1 | <1 | <1 | <3 | <1 | <1 | <1 | <1 | <MDL | | | |
| **Marathon Station, 120 West Broad Street Plume Area** | | | | | | | | | | | | | | | |
| GP-15-13 | 11/11/15 | | | <1 | <1 | <1 | <3 | <1 | <1 | <1 | <1 | <MDL | | | |
| GP-15-15 | 11/12/15 | | | 80 | 27 | 2,600 | 5,625 | <10 | 320 | 1,200 | 250 | 10,102 | | | |
| GP-15-17 | 11/12/15 | | | <1 | <1 | 1.1 | 9 | <1 | 2.4 | 9.8 | 2.9 | 25 | | | |
| GP-15-19 | 11/12/15 | | | 1.8 | 1.8 | <1 | <3 | <1 | <1 | <1 | <1 | 4 | | | |
| GP-15-20 | 11/12/15 | | | <10 | <10 | 650 | 2,348 | <10 | 170 | 790 | 180 | 4,138 | | | |

Cleanup Criteria Requirements for Response Activity (R 299.1 - R 299.50)
Generic Groundwater Cleanup Criteria Table 1: Residential and Non-Residential Part 201 Generic Cleanup Criteria and Screening Levels/Part 213 Risk-Based Screening Levels, December 30, 2013
MDEQ Guidance Document For The Vapor Intrusion Pathway, Policy and Procedure Number: 09-017, Appendix D Vapor Intrusion Screening Values, May 2013

| | | | | | | | | | |
|---|---|---|---|---|---|---|---|---|---|
| **Residential/Nonresidential (µg/L)** | | | | | | | | | |
| Residential Drinking Water (Res DW) | 5.0 (A) | 790 (E) | 74 (E) | 280 (E) | 40 (E) | 63 (E) | 63 (E) | 72 (E) | |
| Residential Health Based Drinking Water Values | NL | 1,000 (E) | 700 (E) | 10,000 (E) | 240 (E) | NL | 1,000 (E) | 1,000 (E) | |
| Nonresidential Drinking Water (Nonres DW) | 5.0 (A) | 790 (E) | 74 (E) | 280 (E) | 40 (E) | 63 (E) | 63 (E) | 72 (E) | |
| Nonresidential Health Based Drinking Water Values | NL | 1,000 (E) | 700 (E) | 10,000 (E) | 690 (E) | NL | 2,900 (E) | 2,900 (E) | |
| Groundwater Surface Water Interface (GSI) | 200 (X) | 270 | 18 | 41 | 7,100 (X) | 17 | 17 | 45 | |
| Residential Groundwater Volatilization to Indoor Air Inhalation (Res GVII) | 5,800 | 5.3E+5 (S) | 1.10E+05 | 1.9E+5 (S) | 4.7E+7 (S) | 56,000 (S) | 56,000 (S) | 61,000 (S) | |
| Nonresidential Groundwater Volatilization to Indoor Air Inhalation (Nonres GVII) | 35,000 | 5.3E+5 (S) | 1.7E+5 (S) | 1.9E+5 (S) | 4.7E+7 (S) | 56,000 (S) | 56,000 (S) | 61,000 (S) | |
| **Screening Levels (µg/L)** | | | | | | | | | |
| Residential Groundwater Vapor Intrusion Screening Levels ($GW_{VI-res}$) | 27 | 36,000 | 700 | 10,000 | 2.50E+06 | 2,400 | 1,700 | 1,200 | |
| Nonresidential Groundwater Vapor Intrusion Screening Levels ($GW_{VI-nr}$) | 140 | 1.50E+05 | 2,600 | 10,000 | 1.00E+06 | 10,000 | 7,300 | 5,100 | |
| Residential Vapor Intrusion Shallow Groundwater Screening Levels ($GW_{VI-sump-res}$) | 5.0 | 1,000 | 700 | 10,000 | 250 | 5.0 | 1.7 | 1.2 | |
| Nonresidential Vapor Intrusion Shallow Groundwater Screening Levels ($GW_{VI-sump-nr}$) | 5.0 | 1,000 | 700 | 10,000 | 1,000 | 10 | 7.3 | 5.1 | |
| Water Solubility | 1.75E+06 | 5.26E+05 | 1.69E+05 | 1.86E+05 | 4.88E+07 | NL | 56,000 | 61,000 | |
| Flammability and Explosivity Screening Level | 88,000 | 81,000 | 43,000 | 70,000 | ID | NL | 56,000 (S) | ID | |
| DRAFT Acute Vapor Intrusion Screening Levels for Groundwater (µg/L) | | | | | | | | | |
| IRASL Groundwater ($AGW_{vi}$) | 11,000 | 2.59E+05 | NL | 1.54E+05 | 5.70E+05 | NL | NL | NL | |
| IRASL Groundwater In Contact With Structure ($AGW_{vi-sump}$) | 11 | 260 | NL | 150 | 570 | NL | NL | NL | |

Indicates nearby location and/or repeat sample events over time

Applicable Criteria/RBSL Exceeded

**BOLD** Value Exceeds Applicable Criteria
bgs Below Ground Surface (feet)
ND Not detected at levels above the laboratory Method Detection Limit (MDL) or Minimum Quantitative Level (MQL)
LNAPL Measurable Light Non-Aqueous Phase Liquid present in well
NA Not available or not applicable
(ECT) Split samples collected by Environmental Consulting and Technology, Inc. on behalf of the MDEQ
(Atwell) Samples collected by Atwell , LLC. on behalf of the MDEQ

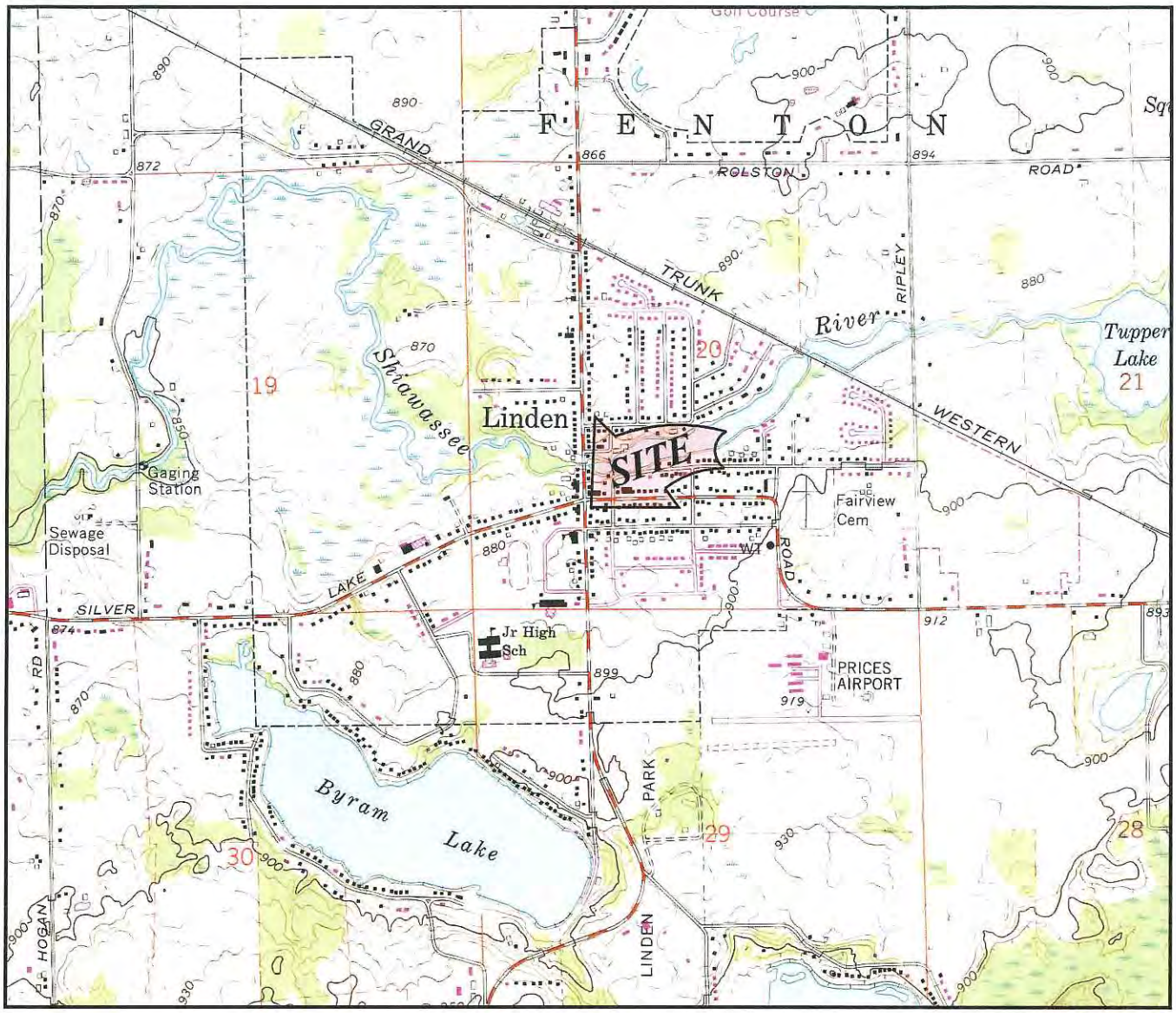

# GENESEE COUNTY

SCALE 1:24,000

1 MILE 1/2 MILE 0 1 MILE

FIGURE 1

**PROPERTY VICINITY MAP**

**USGS, 7.5 MINUTE SERIES**

**LINDEN, MI QUADRANGLE, 1969. PHOTO REVISED 1983.**

| | | | | |
|---|---|---|---|---|
| PM ENVIRONMENTAL Environmental & Engineering Services | PROJ: GASOLINE DISPENSING STATION 110 EAST BROAD STREET LINDEN, MI | THIS IS NOT A LEGAL SURVEY VERIFY SCALE 0 2,000' IF NOT 1" ON THIS SHEET, ADJUST SCALES ACCORDINGLY. | DRN BY: ES/KS/ES | DATE: 2/5/2016 |
| | | | CHKD BY: CS | SCALE: 1" = 2,000' |
| | | | FILE NAME: 01-4982-0-002F01R00 | |

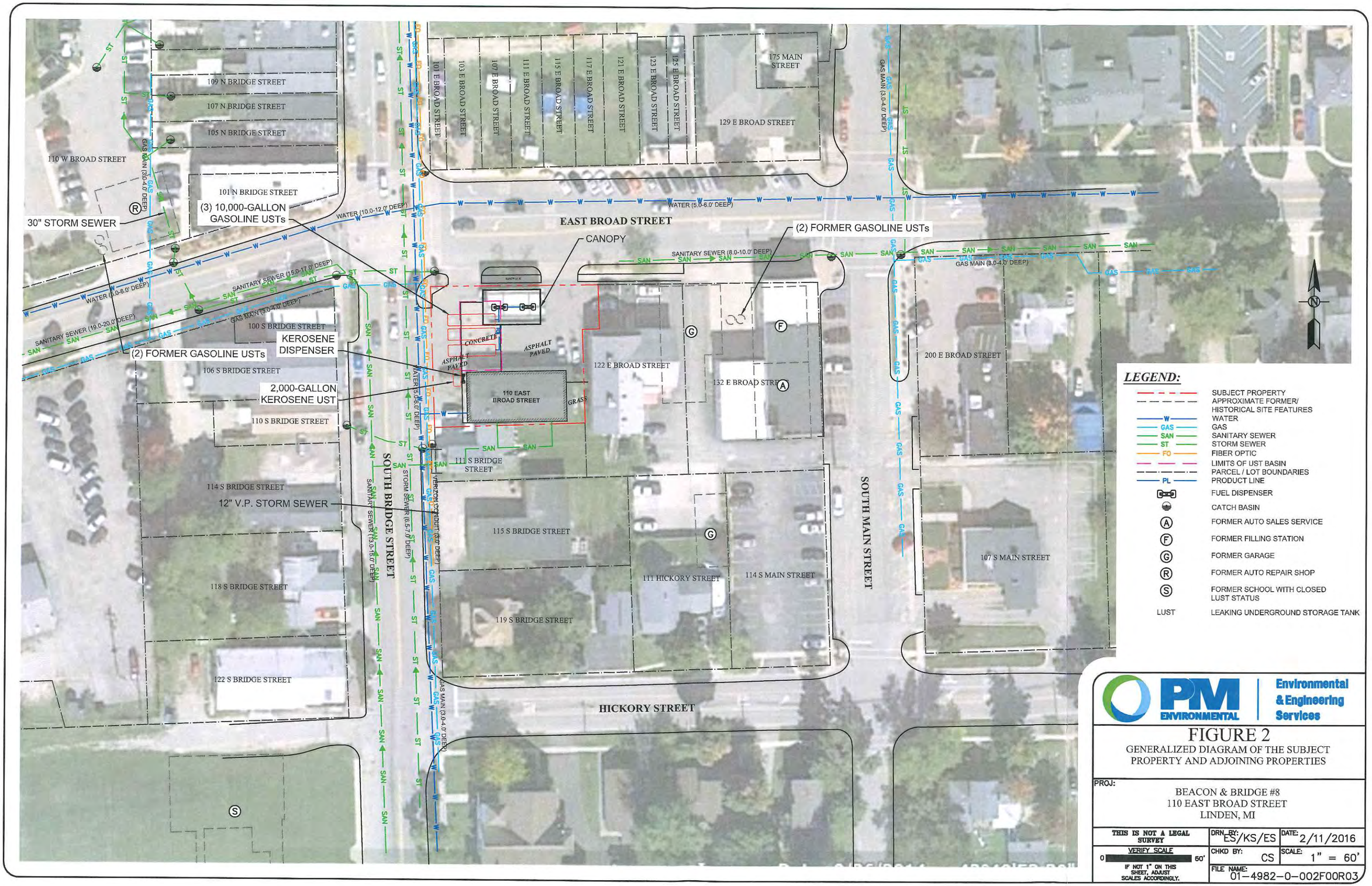


PM ENVIRONMENTAL | Environmental & Engineering Services

# FIGURE 2

GENERALIZED DIAGRAM OF THE SUBJECT PROPERTY AND ADJOINING PROPERTIES

PROJ:

BEACON & BRIDGE #8
110 EAST BROAD STREET
LINDEN, MI

| | | |
|---|---|---|
| THIS IS NOT A LEGAL SURVEY | DRN BY: ES/KS/ES | DATE: 2/11/2016 |
| VERIFY SCALE 0 60' IF NOT 1" ON THIS SHEET, ADJUST SCALES ACCORDINGLY. | CHKD BY: CS | SCALE: 1" = 60' |
| | FILE NAME: 01-4982-0-002F00R03 | |

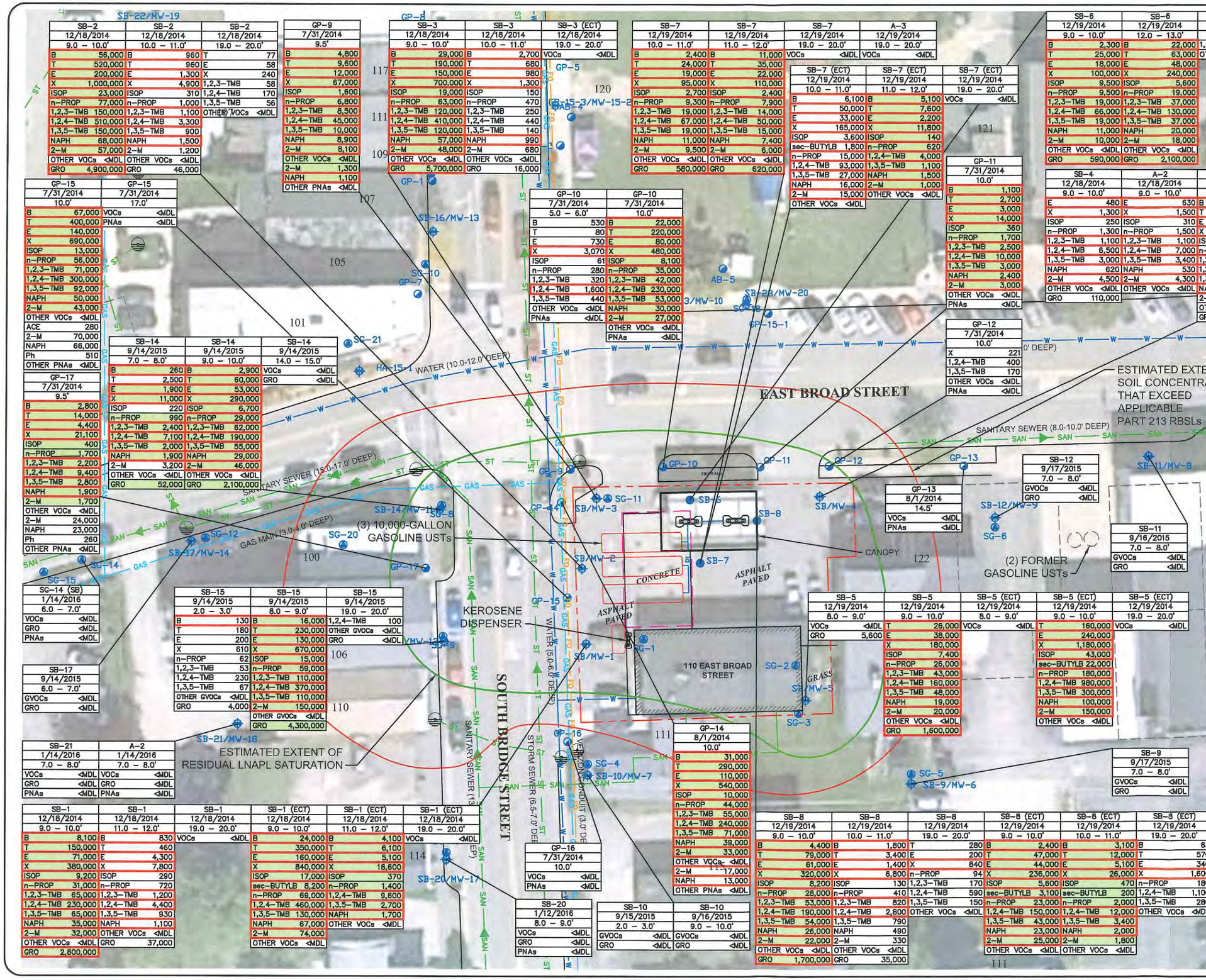


| SB-2 | SB-2 | SB-2 |
|---|---|---|
| 12/18/2014 | 12/18/2014 | 12/18/2014 |
| 9.0 – 10.0' | 10.0 – 11.0' | 19.0 – 20.0' |
| B 56,000 | B 960 | T 77 |
| T 520,000 | T 960 | E 58 |
| E 200,000 | E 1,300 | X 240 |
| X 1,000,000 | X 4,900 | 1,2,3-TMB 58 |
| ISOP 23,000 | ISOP 310 | 1,2,4-TMB 170 |
| n-PROP 77,000 | n-PROP 1,000 | 1,3,5-TMB 56 |
| 1,2,3-TMB 150,000 | 1,2,3-TMB 1,100 | OTHER VOCs <MDL |
| 1,2,4-TMB 510,000 | 1,2,4-TMB 3,300 | |
| 1,3,5-TMB 150,000 | 1,3,5-TMB 900 | |
| NAPH 68,000 | NAPH 1,500 | |
| 2-M 57,000 | 2-M 1,200 | |
| OTHER VOCs <MDL | OTHER VOCs <MDL | |
| GRO 4,900,000 | GRO 46,000 | |

| GP-9 |
|---|
| 7/31/2014 |
| 9.5' |
| B 4,800 |
| T 9,600 |
| E 12,000 |
| X 67,000 |
| ISOP 1,600 |
| n-PROP 6,800 |
| 1,2,3-TMB 8,500 |
| 1,2,4-TMB 45,000 |
| 1,3,5-TMB 10,000 |
| NAPH 8,900 |
| 2-M 8,100 |
| OTHER VOCs <MDL |
| 2-M 1,300 |
| NAPH 1,100 |
| OTHER PNAs <MDL |

| SB-3 | SB-3 | SB-3 (ECT) |
|---|---|---|
| 12/18/2014 | 12/18/2014 | 12/18/2014 |
| 9.0 – 10.0' | 10.0 – 11.0' | 19.0 – 20.0' |
| B 29,000 | B 2,700 | VOCs <MDL |
| T 190,000 | T 680 | |
| E 150,000 | E 980 | |
| X 700,000 | X 1,300 | |
| ISOP 19,000 | ISOP 150 | |
| n-PROP 63,000 | n-PROP 470 | |
| 1,2,3-TMB 120,000 | 1,2,3-TMB 250 | |
| 1,2,4-TMB 410,000 | 1,2,4-TMB 440 | |
| 1,3,5-TMB 120,000 | 1,3,5-TMB 140 | |
| NAPH 57,000 | NAPH 990 | |
| 2-M 48,000 | 2-M 680 | |
| OTHER VOCs <MDL | OTHER VOCs <MDL | |
| GRO 5,700,000 | GRO 16,000 | |

| SB-7 | SB-7 | SB-7 | A-3 |
|---|---|---|---|
| 12/19/2014 | 12/19/2014 | 12/19/2014 | 12/19/2014 |
| 10.0 – 11.0' | 11.0 – 12.0' | 19.0 – 20.0' | 19.0 – 20.0' |
| B 2,400 | B 11,000 | VOCs <MDL | VOCs <MDL |
| T 24,000 | T 35,000 | | |
| E 19,000 | E 22,000 | | |
| X 95,000 | X 110,000 | | |
| ISOP 2,700 | ISOP 2,400 | | |
| n-PROP 9,300 | n-PROP 7,900 | | |
| 1,2,3-TMB 19,000 | 1,2,3-TMB 14,000 | | |
| 1,2,4-TMB 67,000 | 1,2,4-TMB 50,000 | | |
| 1,3,5-TMB 19,000 | 1,3,5-TMB 15,000 | | |
| NAPH 11,000 | NAPH 7,400 | | |
| 2-M 9,500 | 2-M 6,000 | | |
| OTHER VOCs <MDL | OTHER VOCs <MDL | | |
| GRO 580,000 | GRO 620,000 | | |

| SB-7 (ECT) | SB-7 (ECT) | SB-7 (ECT) |
|---|---|---|
| 12/19/2014 | 12/19/2014 | 12/19/2014 |
| 10.0 – 11.0' | 11.0 – 12.0' | 19.0 – 20.0' |
| B 6,100 | B 5,100 | VOCs <MDL |
| T 50,000 | T 7,600 | |
| E 33,000 | E 2,200 | |
| X 165,000 | X 11,800 | |
| ISOP 3,600 | ISOP 140 | |
| sec-BUTYLB 1,800 | n-PROP 620 | |
| n-PROP 15,000 | 1,2,4-TMB 4,000 | |
| 1,2,4-TMB 93,000 | 1,3,5-TMB 1,100 | |
| 1,3,5-TMB 27,000 | NAPH 1,500 | |
| NAPH 16,000 | 2-M 1,000 | |
| 2-M 15,000 | OTHER VOCs <MDL | |
| OTHER VOCs <MDL | | |

| SB-6 | SB-6 | SB-6 | SB-6 (ECT) | SB-6 (ECT) | SB-6 (ECT) |
|---|---|---|---|---|---|
| 12/19/2014 | 12/19/2014 | 12/19/2014 | 12/19/2014 | 12/19/2014 | 12/19/2014 |
| 9.0 – 10.0' | 12.0 – 13.0' | 19.0 – 20.0' | 9.0 – 10.0' | 12.0 – 13.0' | 19.0 – 20.0' |
| B 2,300 | B 22,000 | 1,2,4-TMB 59 | B 5,900 | B 61,000 | T 110 |
| T 25,000 | T 63,000 | OTHER VOCs <MDL | T 58,000 | T 230,000 | E 110 |
| E 18,000 | E 48,000 | | E 32,000 | E 150,000 | X 500 |
| X 100,000 | X 240,000 | | X 178,000 | X 740,000 | n-PROP 60 |
| ISOP 9,500 | ISOP 5,600 | | ISOP 3,600 | ISOP 15,000 | 1,2,4-TMB 330 |
| n-PROP 9,500 | n-PROP 19,000 | | sec-BUTYLB 1,800 | sec-BUTYLB 6,900 | 1,3,5-TMB 110 |
| 1,2,3-TMB 19,000 | 1,2,3-TMB 37,000 | | n-PROP 16,000 | n-PROP 63,000 | OTHER VOCs <MDL |
| 1,2,4-TMB 66,000 | 1,2,4-TMB 130,000 | | 1,2,4-TMB 100,000 | 1,2,4-TMB 370,000 | |
| 1,3,5-TMB 19,000 | 1,3,5-TMB 37,000 | | 1,3,5-TMB 29,000 | 1,3,5-TMB 110,000 | |
| NAPH 11,000 | NAPH 20,000 | | NAPH 21,000 | NAPH 56,000 | |
| 2-M 10,000 | 2-M 18,000 | | 2-M 20,000 | 2-M 59,000 | |
| OTHER VOCs <MDL | OTHER VOCs <MDL | | OTHER VOCs <MDL | OTHER VOCs <MDL | |
| GRO 590,000 | GRO 2,100,000 | | | | |

| GP-15 | GP-15 |
|---|---|
| 7/31/2014 | 7/31/2014 |
| 10.0' | 17.0' |
| B 67,000 | VOCs <MDL |
| T 400,000 | PNAs <MDL |
| E 140,000 | |
| X 690,000 | |
| ISOP 13,000 | |
| n-PROP 56,000 | |
| 1,2,3-TMB 71,000 | |
| 1,2,4-TMB 300,000 | |
| 1,3,5-TMB 92,000 | |
| NAPH 50,000 | |
| 2-M 43,000 | |
| OTHER VOCs <MDL | |
| ACE 280 | |
| 2-M 70,000 | |
| NAPH 66,000 | |
| Ph 510 | |
| OTHER PNAs <MDL | |

| GP-10 | GP-10 |
|---|---|
| 7/31/2014 | 7/31/2014 |
| 5.0 – 6.0' | 10.0' |
| B 530 | B 22,000 |
| T 80 | T 220,000 |
| E 730 | E 80,000 |
| X 3,070 | X 480,000 |
| ISOP 61 | ISOP 8,100 |
| n-PROP 280 | n-PROP 35,000 |
| 1,2,3-TMB 320 | 1,2,3-TMB 42,000 |
| 1,2,4-TMB 1,600 | 1,2,4-TMB 230,000 |
| 1,3,5-TMB 440 | 1,3,5-TMB 53,000 |
| OTHER VOCs <MDL | NAPH 30,000 |
| PNAs <MDL | 2-M 27,000 |
| | OTHER VOCs <MDL |
| | PNAs <MDL |

| GP-11 |
|---|
| 7/31/2014 |
| 10.0' |
| B 1,100 |
| T 2,700 |
| E 3,000 |
| X 14,000 |
| ISOP 360 |
| n-PROP 1,700 |
| 1,2,3-TMB 2,500 |
| 1,2,4-TMB 10,000 |
| 1,3,5-TMB 3,000 |
| NAPH 2,400 |
| 2-M 3,000 |
| OTHER VOCs <MDL |
| PNAs <MDL |

| SB-4 | A-2 | SB-4 | SB-4 (ECT) | SB-4 (ECT) | SB-4 (ECT) |
|---|---|---|---|---|---|
| 12/18/2014 | 12/18/2014 | 12/18/2014 | 12/18/2014 | 12/18/2014 | 12/18/2014 |
| 9.0 – 10.0' | 9.0 – 10.0' | 10.0 – 11.0' | 9.0 – 10.0' | 10.0 – 11.0' | 19.0 – 20.0' |
| E 480 | E 630 | B 790 | E 1,300 | B 770 | VOCs <MDL |
| X 1,300 | X 1,500 | T 450 | X 3,280 | T 1,200 | |
| ISOP 250 | ISOP 310 | E 4,300 | ISOP 630 | E 4,400 | |
| n-PROP 1,300 | n-PROP 1,500 | X 17,000 | sec-BUTYLB 2,000 | X 20,000 | |
| 1,2,3-TMB 1,100 | 1,2,3-TMB 1,100 | ISOP 370 | n-PROP 3,900 | ISOP 370 | |
| 1,2,4-TMB 6,500 | 1,2,4-TMB 7,000 | n-PROP 1,300 | 1,2,4-TMB 17,000 | sec-BUTYLB 140 | |
| 1,3,5-TMB 3,000 | 1,3,5-TMB 3,400 | 1,2,3-TMB 2,700 | 1,3,5-TMB 8,100 | n-PROP 1,500 | |
| NAPH 620 | NAPH 530 | 1,2,4-TMB 8,900 | NAPH 1,300 | 1,2,4-TMB 10,000 | |
| 2-M 4,500 | 2-M 4,300 | 1,3,5-TMB 2,300 | 2-M 14,000 | 1,3,5-TMB 2,700 | |
| OTHER VOCs <MDL | OTHER VOCs <MDL | NAPH 2,900 | OTHER VOCs <MDL | NAPH 2,900 | |
| GRO 110,000 | | 2-M 2,100 | | 2-M 2,300 | |
| | | OTHER VOCs <MDL | | OTHER VOCs <MDL | |
| | | GRO 73,000 | | | |

| GP-12 |
|---|
| 7/31/2014 |
| 10.0' |
| X 221 |
| 1,2,4-TMB 400 |
| 1,3,5-TMB 170 |
| OTHER VOCs <MDL |
| PNAs <MDL |

| GP-17 |
|---|
| 7/31/2014 |
| 9.5' |
| B 2,800 |
| T 14,000 |
| E 4,400 |
| X 21,100 |
| ISOP 400 |
| n-PROP 1,700 |
| 1,2,3-TMB 2,200 |
| 1,2,4-TMB 9,400 |
| 1,3,5-TMB 2,800 |
| NAPH 1,900 |
| 2-M 1,700 |
| OTHER VOCs <MDL |
| 2-M 24,000 |
| NAPH 23,000 |
| Ph 260 |
| OTHER PNAs <MDL |

| SB-14 | SB-14 | SB-14 |
|---|---|---|
| 9/14/2015 | 9/14/2015 | 9/14/2015 |
| 7.0 – 8.0' | 9.0 – 10.0' | 14.0 – 15.0' |
| B 260 | B 2,900 | VOCs <MDL |
| T 2,500 | T 60,000 | GRO <MDL |
| E 1,900 | E 53,000 | |
| X 11,000 | X 290,000 | |
| ISOP 220 | ISOP 6,700 | |
| n-PROP 990 | n-PROP 29,000 | |
| 1,2,3-TMB 2,400 | 1,2,3-TMB 62,000 | |
| 1,2,4-TMB 7,100 | 1,2,4-TMB 190,000 | |
| 1,3,5-TMB 2,000 | 1,3,5-TMB 55,000 | |
| NAPH 1,900 | NAPH 29,000 | |
| 2-M 3,200 | 2-M 46,000 | |
| OTHER VOCs <MDL | OTHER VOCs <MDL | |
| GRO 52,000 | GRO 2,100,000 | |

| GP-13 |
|---|
| 8/1/2014 |
| 14.5' |
| VOCs <MDL |
| PNAs <MDL |

| SB-12 |
|---|
| 9/17/2015 |
| 7.0 – 8.0' |
| GVOCs <MDL |
| GRO <MDL |

| SB-11 |
|---|
| 9/16/2015 |
| 7.0 – 8.0' |
| GVOCs <MDL |
| GRO <MDL |

| SG-14 (SB) |
|---|
| 1/14/2016 |
| 6.0 – 7.0' |
| VOCs <MDL |
| GRO <MDL |
| PNAs <MDL |

| SB-15 | SB-15 | SB-15 |
|---|---|---|
| 9/14/2015 | 9/14/2015 | 9/14/2015 |
| 2.0 – 3.0' | 8.0 – 9.0' | 19.0 – 20.0' |
| B 130 | B 16,000 | 1,2,4-TMB 100 |
| T 180 | T 230,000 | OTHER GVOCs <MDL |
| E 200 | E 130,000 | GRO <MDL |
| X 610 | X 670,000 | |
| n-PROP 62 | ISOP 15,000 | |
| 1,2,3-TMB 53 | n-PROP 59,000 | |
| 1,2,4-TMB 230 | 1,2,3-TMB 110,000 | |
| 1,3,5-TMB 67 | 1,2,4-TMB 370,000 | |
| OTHER GVOCs <MDL | 1,3,5-TMB 110,000 | |
| GRO 4,000 | 2-M 150,000 | |
| | OTHER GVOCs <MDL | |
| | GRO 4,300,000 | |

| SB-5 | SB-5 | SB-5 (ECT) | SB-5 (ECT) | SB-5 (ECT) |
|---|---|---|---|---|
| 12/19/2014 | 12/19/2014 | 12/19/2014 | 12/19/2014 | 12/19/2014 |
| 8.0 – 9.0' | 9.0 – 10.0' | 8.0 – 9.0' | 9.0 – 10.0' | 19.0 – 20.0' |
| VOCs <MDL | T 26,000 | VOCs <MDL | T 160,000 | VOCs <MDL |
| GRO 5,600 | E 38,000 | | E 240,000 | |
| | X 180,000 | | X 1,180,000 | |
| | ISOP 7,400 | | ISOP 43,000 | |
| | n-PROP 26,000 | | sec-BUTYLB 22,000 | |
| | 1,2,3-TMB 43,000 | | n-PROP 180,000 | |
| | 1,2,4-TMB 160,000 | | 1,2,4-TMB 980,000 | |
| | 1,3,5-TMB 48,000 | | 1,3,5-TMB 300,000 | |
| | NAPH 19,000 | | NAPH 100,000 | |
| | 2-M 20,000 | | 2-M 150,000 | |
| | OTHER VOCs <MDL | | OTHER VOCs <MDL | |
| | GRO 1,600,000 | | | |

| SB-17 |
|---|
| 9/14/2015 |
| 6.0 – 7.0' |
| GVOCs <MDL |
| GRO <MDL |

| SB-21 | A-2 |
|---|---|
| 1/14/2016 | 1/14/2016 |
| 7.0 – 8.0' | 7.0 – 8.0' |
| VOCs <MDL | VOCs <MDL |
| GRO <MDL | GRO <MDL |
| PNAs <MDL | PNAs <MDL |

| GP-14 |
|---|
| 8/1/2014 |
| 10.0' |
| B 31,000 |
| T 290,000 |
| E 110,000 |
| X 540,000 |
| ISOP 10,000 |
| n-PROP 44,000 |
| 1,2,3-TMB 55,000 |
| 1,2,4-TMB 240,000 |
| 1,3,5-TMB 71,000 |
| NAPH 39,000 |
| 2-M 33,000 |
| OTHER VOCs <MDL |
| 2-M 17,000 |
| NAPH 13,000 |
| OTHER PNAs <MDL |

| SB-9 |
|---|
| 9/17/2015 |
| 7.0 – 8.0' |
| GVOCs <MDL |
| GRO <MDL |

| SB-1 | SB-1 | SB-1 | SB-1 (ECT) | SB-1 (ECT) | SB-1 (ECT) |
|---|---|---|---|---|---|
| 12/18/2014 | 12/18/2014 | 12/18/2014 | 12/18/2014 | 12/18/2014 | 12/18/2014 |
| 9.0 – 10.0' | 11.0 – 12.0' | 19.0 – 20.0' | 9.0 – 10.0' | 11.0 – 12.0' | 19.0 – 20.0' |
| B 8,100 | B 830 | VOCs <MDL | B 24,000 | B 4,100 | VOCs <MDL |
| T 150,000 | T 460 | | T 350,000 | T 6,100 | |
| E 71,000 | E 4,300 | | E 160,000 | E 5,100 | |
| X 380,000 | X 7,800 | | X 840,000 | X 18,600 | |
| ISOP 9,200 | ISOP 290 | | ISOP 17,000 | ISOP 370 | |
| n-PROP 31,000 | n-PROP 720 | | sec-BUTYLB 8,200 | n-PROP 1,400 | |
| 1,2,3-TMB 65,000 | 1,2,3-TMB 1,200 | | n-PROP 69,000 | 1,2,4-TMB 9,600 | |
| 1,2,4-TMB 230,000 | 1,2,4-TMB 4,400 | | 1,2,4-TMB 460,000 | 1,3,5-TMB 2,700 | |
| 1,3,5-TMB 65,000 | 1,3,5-TMB 930 | | 1,3,5-TMB 130,000 | NAPH 1,700 | |
| NAPH 35,000 | NAPH 1,100 | | NAPH 67,000 | OTHER VOCs <MDL | |
| 2-M 32,000 | OTHER VOCs <MDL | | 2-M 74,000 | | |
| OTHER VOCs <MDL | GRO 37,000 | | OTHER VOCs <MDL | | |
| GRO 2,800,000 | | | | | |

| GP-16 |
|---|
| 7/31/2014 |
| 10.0' |
| VOCs <MDL |
| PNAs <MDL |

| SB-20 |
|---|
| 1/12/2016 |
| 8.0 – 9.0' |
| VOCs <MDL |
| GRO <MDL |
| PNAs <MDL |

| SB-10 | SB-10 |
|---|---|
| 9/15/2015 | 9/16/2015 |
| 2.0 – 3.0' | 9.0 – 10.0' |
| GVOCs <MDL | GVOCs <MDL |
| GRO <MDL | GRO <MDL |

| SB-8 | SB-8 | SB-8 | SB-8 (ECT) | SB-8 (ECT) | SB-8 (ECT) |
|---|---|---|---|---|---|
| 12/19/2014 | 12/19/2014 | 12/19/2014 | 12/19/2014 | 12/19/2014 | 12/19/2014 |
| 9.0 – 10.0' | 10.0 – 11.0' | 19.0 – 20.0' | 9.0 – 10.0' | 10.0 – 11.0' | 19.0 – 20.0' |
| B 4,400 | B 1,800 | T 280 | B 2,400 | B 3,100 | B 63 |
| T 79,000 | T 3,400 | E 200 | T 47,000 | T 12,000 | T 570 |
| E 61,000 | E 1,400 | X 840 | E 44,000 | E 5,100 | E 340 |
| X 320,000 | X 6,800 | n-PROP 94 | X 236,000 | X 26,000 | X 1,600 |
| ISOP 8,200 | ISOP 130 | 1,2,3-TMB 170 | ISOP 5,600 | ISOP 470 | n-PROP 180 |
| n-PROP 28,000 | n-PROP 410 | 1,2,4-TMB 590 | sec-BUTYLB 3,100 | sec-BUTYLB 200 | 1,2,4-TMB 1,100 |
| 1,2,3-TMB 53,000 | 1,2,3-TMB 820 | 1,3,5-TMB 150 | n-PROP 23,000 | n-PROP 2,000 | 1,3,5-TMB 280 |
| 1,2,4-TMB 190,000 | 1,2,4-TMB 2,800 | OTHER VOCs <MDL | 1,2,4-TMB 150,000 | 1,2,4-TMB 12,000 | OTHER VOCs <MDL |
| 1,3,5-TMB 54,000 | 1,3,5-TMB 790 | | 1,3,5-TMB 43,000 | 1,3,5-TMB 3,400 | |
| NAPH 26,000 | NAPH 490 | | NAPH 23,000 | NAPH 2,000 | |
| 2-M 22,000 | 2-M 330 | | 2-M 25,000 | 2-M 1,800 | |
| OTHER VOCs <MDL | OTHER VOCs <MDL | | OTHER VOCs <MDL | OTHER VOCs <MDL | |
| GRO 1,700,000 | GRO 35,000 | | | | |

## LEGEND:

| | |
|---|---|
| | SUBJECT PROPERTY |
| | APPROXIMATE FORMER/ HISTORICAL SITE FEATURES |
| W | WATER |
| GAS | GAS |
| SAN | SANITARY SEWER |
| ST | STORM SEWER |
| FO | FIBER OPTIC |
| | LIMITS OF UST BASIN |
| | PARCEL / LOT BOUNDARIES |
| PL | PRODUCT LINE |
| | FUEL DISPENSER |
| | SOIL BORING |
| | SOIL BORING/MONITORING WELL |
| | SOIL GAS SAMPLE |
| | ECT SOIL BORING |
| | CATCH BASIN |
| 2-M | 2-METHYLNAPHTHALENE |
| NAPH | NAPHTHALENE |
| Ph | PHENANTHRENE |
| B | BENZENE |
| T | TOLUENE |
| E | ETHYLBENZENE |
| X | XYLENES |
| 1,2,4-TMB | 1,2,4-TRIMETHYLBENZENE |
| 1,3,5-TMB | 1,3,5-TRIMETHYLBENZENE |
| 1,2,3-TMB | 1,2,3-TRIMETHYLBENZENE |
| ISOP | ISOPROPYLBENZENE |
| n-PROP | n-PROPYLBENZENE |
| sec-BUTYLB | sec-BUTYLBENZENE |
| VOCs | VOLATILE ORGANIC COMPOUNDS |
| PNAs | POLYNUCLEAR AROMATIC COMPOUNDS |
| GRO | GASOLINE RANGE ORGANICS |
| MDL | METHOD DETECTION LIMIT |
| UNITs | µg/Kg (UNLESS NOTED) |
| | VALUE EXCEEDS APPLICABLE CRITERIA |
| | RESIDUAL LNAPL SATURATION |

NOTES: REFER TO TABLES FOR SPECIFIC COMPOUNDS ANALYZED

PM ENVIRONMENTAL | Environmental & Engineering Services

# FIGURE 3A

SOIL BORING/MONITORING WELL/SOIL GAS SAMPLE LOCATION MAP WITH SOIL ANALYTICAL RESULTS (BEACON & BRIDGE #8 PLUME)

PROJ:

BEACON & BRIDGE #8
110 EAST BROAD STREET
LINDEN, MI

| | | |
|---|---|---|
| THIS IS NOT A LEGAL SURVEY | DRN BY: ES/KS/ES | DATE: 2/11/2016 |
| VERIFY SCALE 0 40' IF NOT 1" ON THIS SHEET, ADJUST SCALES ACCORDINGLY. | CHKD BY: CS | SCALE: 1" = 40' |
| | FILE NAME: 01-4982-0-002F00R03 | |

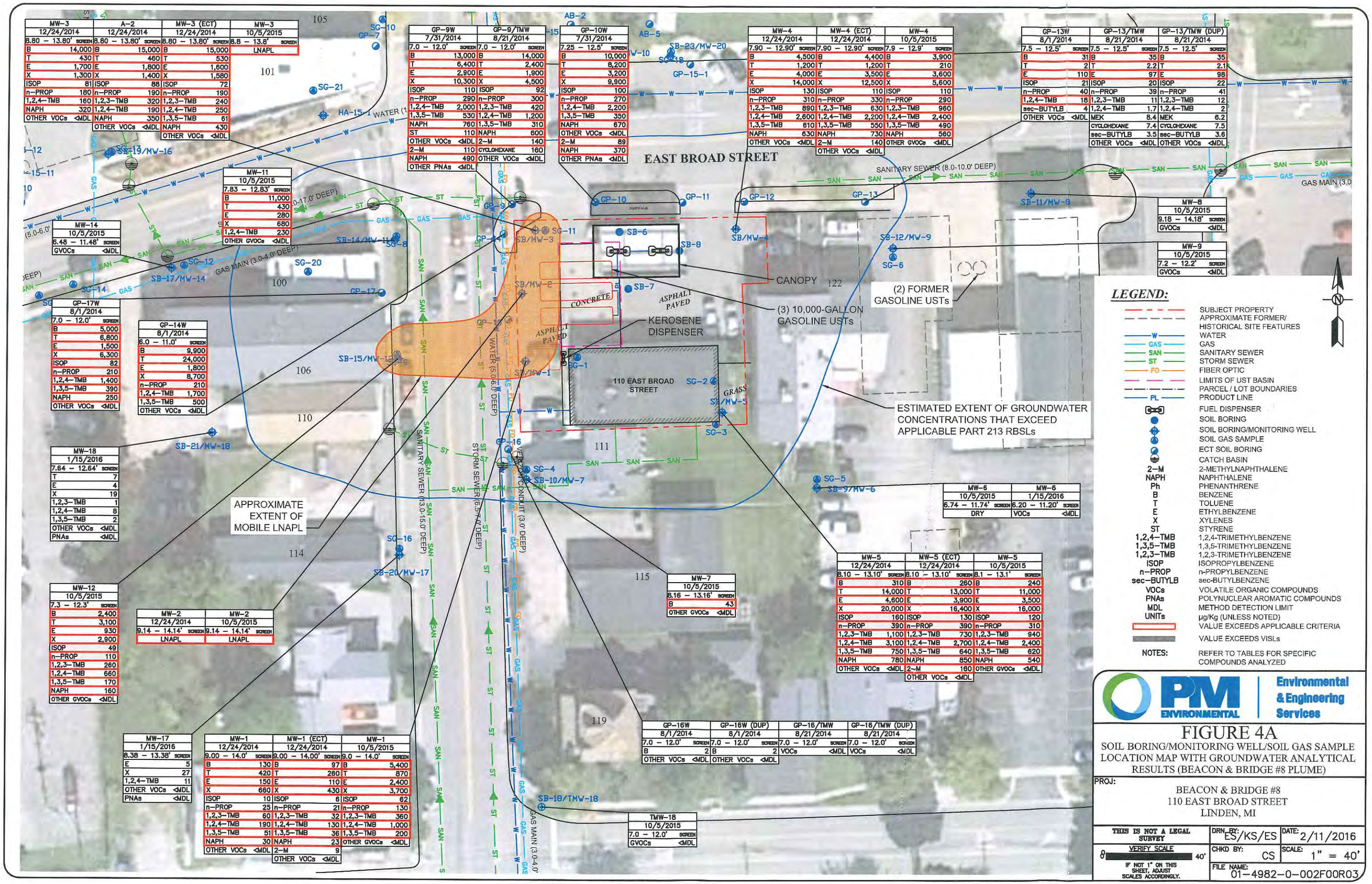


| MW-3 | A-2 | MW-3 (ECT) | MW-3 |
|---|---|---|---|
| 12/24/2014 | 12/24/2014 | 12/24/2014 | 10/5/2015 |
| 8.80 – 13.80' SCREEN | 8.80 – 13.80' SCREEN | 8.80 – 13.80' SCREEN | 8.8 – 13.8' SCREEN |
| B 14,000 | B 15,000 | B 15,000 | LNAPL |
| T 430 | T 460 | T 530 | |
| E 1,700 | E 1,800 | E 1,600 | |
| X 1,300 | X 1,400 | X 1,580 | |
| ISOP 81 | ISOP 88 | ISOP 72 | |
| n-PROP 180 | n-PROP 190 | n-PROP 190 | |
| 1,2,4-TMB 160 | 1,2,3-TMB 320 | 1,2,3-TMB 240 | |
| NAPH 320 | 1,2,4-TMB 190 | 1,2,4-TMB 250 | |
| OTHER VOCs <MDL | NAPH 350 | 1,3,5-TMB 61 | |
| | OTHER VOCs <MDL | NAPH 430 | |
| | | OTHER VOCs <MDL | |

| GP-9W | GP-9/TMW |
|---|---|
| 7/31/2014 | 8/21/2014 |
| 7.0 – 12.0' SCREEN | 7.0 – 12.0' SCREEN |
| B 13,000 | B 14,000 |
| T 6,400 | T 2,400 |
| E 2,900 | E 1,900 |
| X 10,300 | X 4,500 |
| ISOP 110 | ISOP 92 |
| n-PROP 290 | n-PROP 300 |
| 1,2,4-TMB 2,000 | 1,2,3-TMB 420 |
| 1,3,5-TMB 530 | 1,2,4-TMB 1,200 |
| NAPH 760 | 1,3,5-TMB 310 |
| ST 110 | NAPH 600 |
| OTHER VOCs <MDL | 2-M 140 |
| 2-M 110 | CYCLOHEXANE 160 |
| NAPH 490 | OTHER VOCs <MDL |
| OTHER PNAs <MDL | |

| GP-10W |
|---|
| 7/31/2014 |
| 7.25 – 12.5' SCREEN |
| B 10,000 |
| T 8,200 |
| E 3,200 |
| X 9,900 |
| ISOP 100 |
| n-PROP 270 |
| 1,2,4-TMB 2,200 |
| 1,3,5-TMB 350 |
| NAPH 670 |
| OTHER VOCs <MDL |
| 2-M 89 |
| NAPH 370 |
| OTHER PNAs <MDL |

| MW-4 | MW-4 (ECT) | MW-4 |
|---|---|---|
| 12/24/2014 | 12/24/2014 | 10/5/2015 |
| 7.90 – 12.90' SCREEN | 7.90 – 12.90' SCREEN | 7.9 – 12.9' SCREEN |
| B 4,500 | B 4,400 | B 3,900 |
| T 1,200 | T 1,200 | T 210 |
| E 4,000 | E 3,500 | E 3,600 |
| X 14,000 | X 12,500 | X 5,600 |
| ISOP 130 | ISOP 110 | ISOP 110 |
| n-PROP 310 | n-PROP 330 | n-PROP 290 |
| 1,2,3-TMB 890 | 1,2,3-TMB 630 | 1,2,3-TMB 960 |
| 1,2,4-TMB 2,600 | 1,2,4-TMB 2,200 | 1,2,4-TMB 2,400 |
| 1,3,5-TMB 610 | 1,3,5-TMB 550 | 1,3,5-TMB 490 |
| NAPH 630 | NAPH 730 | NAPH 560 |
| OTHER VOCs <MDL | 2-M 140 | OTHER GVOCs <MDL |
| | OTHER VOCs <MDL | |

| GP-13W | GP-13/TMW | GP-13/TMW (DUP) |
|---|---|---|
| 8/1/2014 | 8/21/2014 | 8/21/2014 |
| 7.5 – 12.5' SCREEN | 7.5 – 12.5' SCREEN | 7.5 – 12.5' SCREEN |
| B 31 | B 35 | B 35 |
| T 2 | T 2.2 | T 2.1 |
| E 110 | E 97 | E 98 |
| ISOP 21 | ISOP 20 | ISOP 22 |
| n-PROP 40 | n-PROP 39 | n-PROP 41 |
| 1,2,4-TMB 18 | 1,2,3-TMB 11 | 1,2,3-TMB 12 |
| sec-BUTYLB 4 | 1,2,4-TMB 1.7 | 1,2,4-TMB 2 |
| OTHER VOCs <MDL | MEK 8.4 | MEK 6.2 |
| | CYCLOHEXANE 7.4 | CYCLOHEXANE 7.5 |
| | sec-BUTYLB 3.5 | sec-BUTYLB 3.6 |
| | OTHER VOCs <MDL | OTHER VOCs <MDL |

| MW-11 |
|---|
| 10/5/2015 |
| 7.83 – 12.83' SCREEN |
| B 11,000 |
| T 430 |
| E 280 |
| X 680 |
| 1,2,4-TMB 230 |
| OTHER GVOCs <MDL |

| MW-14 |
|---|
| 10/5/2015 |
| 6.48 – 11.48' SCREEN |
| GVOCs <MDL |

| MW-8 |
|---|
| 10/5/2015 |
| 9.18 – 14.18' SCREEN |
| GVOCs <MDL |

| MW-9 |
|---|
| 10/5/2015 |
| 7.2 – 12.2' SCREEN |
| GVOCs <MDL |

| GP-17W |
|---|
| 8/1/2014 |
| 7.0 – 12.0' SCREEN |
| B 5,000 |
| T 6,800 |
| E 1,500 |
| X 6,300 |
| ISOP 82 |
| n-PROP 210 |
| 1,2,4-TMB 1,400 |
| 1,3,5-TMB 390 |
| NAPH 250 |
| OTHER VOCs <MDL |

| GP-14W |
|---|
| 8/1/2014 |
| 6.0 – 11.0' SCREEN |
| B 9,900 |
| T 24,000 |
| E 1,800 |
| X 8,700 |
| n-PROP 210 |
| 1,2,4-TMB 1,700 |
| 1,3,5-TMB 500 |
| OTHER VOCs <MDL |

| MW-18 |
|---|
| 1/15/2016 |
| 7.64 – 12.64' SCREEN |
| T 7 |
| E 4 |
| X 19 |
| 1,2,3-TMB 1 |
| 1,2,4-TMB 8 |
| 1,3,5-TMB 2 |
| OTHER VOCs <MDL |
| PNAs <MDL |

| MW-6 | MW-6 |
|---|---|
| 10/5/2015 | 1/15/2016 |
| 6.74 – 11.74' SCREEN | 6.20 – 11.20' SCREEN |
| DRY | VOCs <MDL |

| MW-5 | MW-5 (ECT) | MW-5 |
|---|---|---|
| 12/24/2014 | 12/24/2014 | 10/5/2015 |
| 8.10 – 13.10' SCREEN | 8.10 – 13.10' SCREEN | 8.1 – 13.1' SCREEN |
| B 310 | B 260 | B 240 |
| T 14,000 | T 13,000 | T 11,000 |
| E 4,600 | E 3,900 | E 3,500 |
| X 20,000 | X 16,400 | X 16,000 |
| ISOP 160 | ISOP 130 | ISOP 120 |
| n-PROP 390 | n-PROP 390 | n-PROP 310 |
| 1,2,3-TMB 1,100 | 1,2,3-TMB 730 | 1,2,3-TMB 940 |
| 1,2,4-TMB 3,100 | 1,2,4-TMB 2,700 | 1,2,4-TMB 2,400 |
| 1,3,5-TMB 750 | 1,3,5-TMB 640 | 1,3,5-TMB 620 |
| NAPH 780 | NAPH 850 | NAPH 540 |
| OTHER VOCs <MDL | 2-M 160 | OTHER GVOCs <MDL |
| | OTHER VOCs <MDL | |

| MW-7 |
|---|
| 10/5/2015 |
| 8.16 – 13.16' SCREEN |
| B 43 |
| OTHER GVOCs <MDL |

| MW-12 |
|---|
| 10/5/2015 |
| 7.3 – 12.3' SCREEN |
| B 2,400 |
| T 3,100 |
| E 930 |
| X 2,900 |
| ISOP 49 |
| n-PROP 110 |
| 1,2,3-TMB 260 |
| 1,2,4-TMB 660 |
| 1,3,5-TMB 170 |
| NAPH 160 |
| OTHER GVOCs <MDL |

| MW-2 | MW-2 |
|---|---|
| 12/24/2014 | 10/5/2015 |
| 9.14 – 14.14' SCREEN | 9.14 – 14.14' SCREEN |
| LNAPL | LNAPL |

| MW-17 |
|---|
| 1/15/2016 |
| 8.38 – 13.38' SCREEN |
| E 5 |
| X 27 |
| 1,2,4-TMB 11 |
| OTHER VOCs <MDL |
| PNAs <MDL |

| MW-1 | MW-1 (ECT) | MW-1 |
|---|---|---|
| 12/24/2014 | 12/24/2014 | 10/5/2015 |
| 9.00 – 14.0' SCREEN | 9.00 – 14.00' SCREEN | 9.0 – 14.0' SCREEN |
| B 130 | B 97 | B 5,400 |
| T 420 | T 260 | T 870 |
| E 150 | E 110 | E 2,400 |
| X 660 | X 430 | X 3,700 |
| ISOP 10 | ISOP 6 | ISOP 62 |
| n-PROP 25 | n-PROP 21 | n-PROP 130 |
| 1,2,3-TMB 60 | 1,2,3-TMB 32 | 1,2,3-TMB 360 |
| 1,2,4-TMB 190 | 1,2,4-TMB 130 | 1,2,4-TMB 1,000 |
| 1,3,5-TMB 51 | 1,3,5-TMB 36 | 1,3,5-TMB 200 |
| NAPH 30 | NAPH 23 | OTHER GVOCs <MDL |
| OTHER VOCs <MDL | 2-M 9 | |
| | OTHER VOCs <MDL | |

| GP-16W | GP-16W (DUP) | GP-16/TMW | GP-16/TMW (DUP) |
|---|---|---|---|
| 8/1/2014 | 8/1/2014 | 8/21/2014 | 8/21/2014 |
| 7.0 – 12.0' SCREEN | 7.0 – 12.0' SCREEN | 7.0 – 12.0' SCREEN | 7.0 – 12.0' SCREEN |
| B 2 | B 2 | VOCs <MDL | VOCs <MDL |
| OTHER VOCs <MDL | OTHER VOCs <MDL | | |

| TMW-18 |
|---|
| 10/5/2015 |
| 7.0 – 12.0' SCREEN |
| GVOCs <MDL |

PM ENVIRONMENTAL | Environmental & Engineering Services

# FIGURE 4A

SOIL BORING/MONITORING WELL/SOIL GAS SAMPLE LOCATION MAP WITH GROUNDWATER ANALYTICAL RESULTS (BEACON & BRIDGE #8 PLUME)

PROJ:

BEACON & BRIDGE #8
110 EAST BROAD STREET
LINDEN, MI

THIS IS NOT A LEGAL SURVEY

VERIFY SCALE 0 40'

IF NOT 1" ON THIS SHEET, ADJUST SCALES ACCORDINGLY.

DRN BY: ES/KS/ES | DATE: 2/11/2016

CHKD BY: CS | SCALE: 1" = 40'

FILE NAME: 01-4982-0-002F00R03

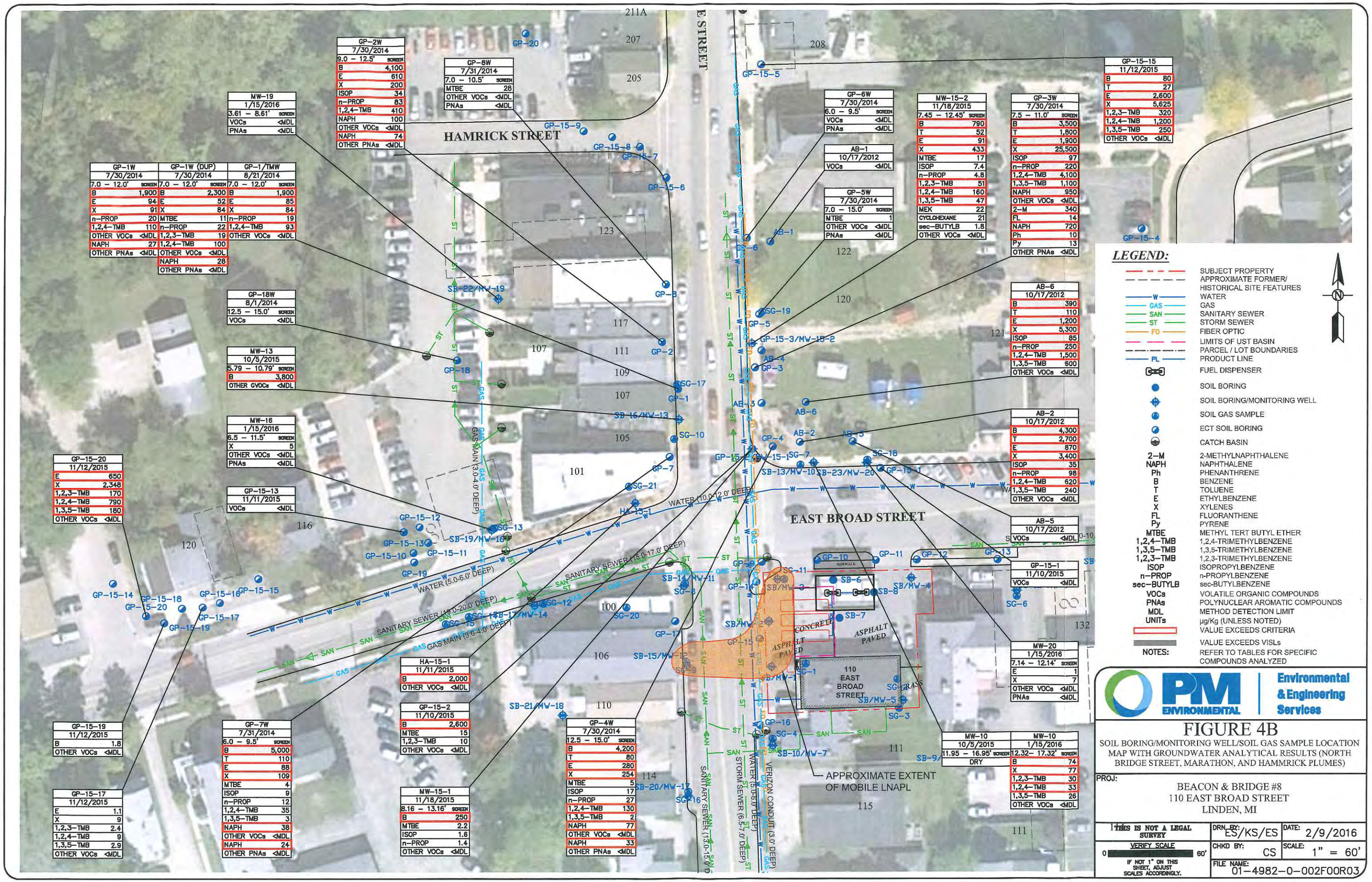


# FIGURE 4B

SOIL BORING/MONITORING WELL/SOIL GAS SAMPLE LOCATION MAP WITH GROUNDWATER ANALYTICAL RESULTS (NORTH BRIDGE STREET, MARATHON, AND HAMMRICK PLUMES)

PROJ:

BEACON & BRIDGE #8
110 EAST BROAD STREET
LINDEN, MI

| | | |
|---|---|---|
| THIS IS NOT A LEGAL SURVEY | DRN BY: ES/KS/ES | DATE: 2/9/2016 |
| VERIFY SCALE 0 60' IF NOT 1" ON THIS SHEET, ADJUST SCALES ACCORDINGLY. | CHKD BY: CS | SCALE: 1" = 60' |
| | FILE NAME: 01-4982-0-002F00R03 | |

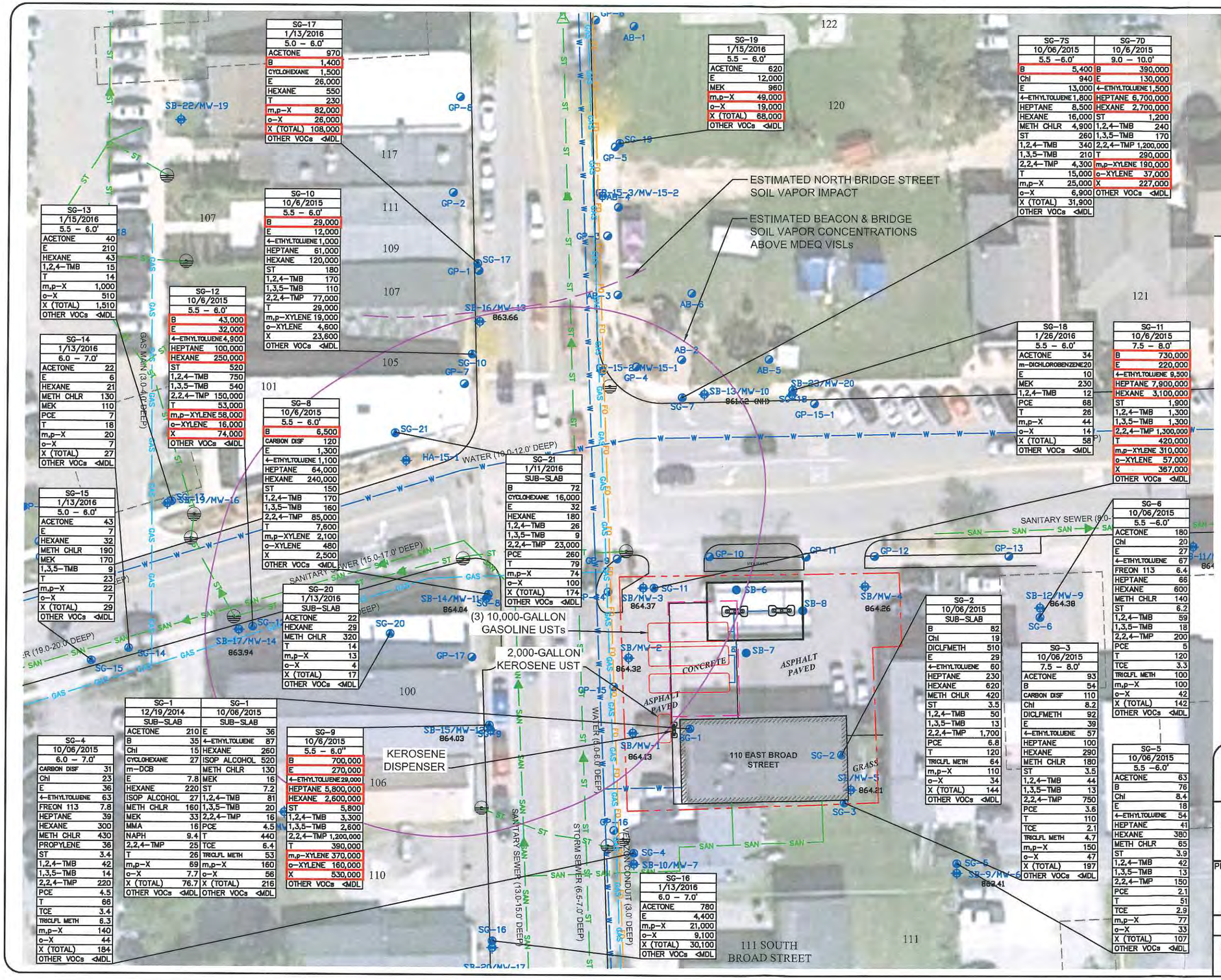


| SG-17 | |
|---|---|
| 1/13/2016 | |
| 5.0 – 6.0' | |
| ACETONE | 970 |
| B | 1,400 |
| CYCLOHEXANE | 1,500 |
| E | 26,000 |
| HEXANE | 550 |
| T | 230 |
| m,p–X | 82,000 |
| o–X | 26,000 |
| X (TOTAL) | 108,000 |
| OTHER VOCs | <MDL |

| SG-10 | |
|---|---|
| 10/6/2015 | |
| 5.5 – 6.0' | |
| B | 29,000 |
| E | 12,000 |
| 4–ETHYLTOLUENE | 1,000 |
| HEPTANE | 61,000 |
| HEXANE | 120,000 |
| ST | 180 |
| 1,2,4–TMB | 170 |
| 1,3,5–TMB | 110 |
| 2,2,4–TMP | 77,000 |
| T | 29,000 |
| m,p–XYLENE | 19,000 |
| o–XYLENE | 4,600 |
| X | 23,600 |
| OTHER VOCs | <MDL |

| SG-13 | |
|---|---|
| 1/15/2016 | |
| 5.5 – 6.0' | |
| ACETONE | 40 |
| E | 210 |
| HEXANE | 43 |
| 1,2,4–TMB | 15 |
| T | 14 |
| m,p–X | 1,000 |
| o–X | 510 |
| X (TOTAL) | 1,510 |
| OTHER VOCs | <MDL |

| SG-12 | |
|---|---|
| 10/6/2015 | |
| 5.5 – 6.0' | |
| B | 43,000 |
| E | 32,000 |
| 4–ETHYLTOLUENE | 4,900 |
| HEPTANE | 100,000 |
| HEXANE | 250,000 |
| ST | 520 |
| 1,2,4–TMB | 750 |
| 1,3,5–TMB | 540 |
| 2,2,4–TMP | 150,000 |
| T | 53,000 |
| m,p–XYLENE | 58,000 |
| o–XYLENE | 16,000 |
| X | 74,000 |
| OTHER VOCs | <MDL |

| SG-14 | |
|---|---|
| 1/13/2016 | |
| 6.0 – 7.0' | |
| ACETONE | 22 |
| E | 6 |
| HEXANE | 21 |
| METH CHLR | 130 |
| MEK | 110 |
| PCE | 7 |
| T | 18 |
| m,p–X | 20 |
| o–X | 7 |
| X (TOTAL) | 27 |
| OTHER VOCs | <MDL |

| SG-8 | |
|---|---|
| 10/6/2015 | |
| 5.5 – 6.0' | |
| B | 6,500 |
| CARBON DISF | 120 |
| E | 1,300 |
| 4–ETHYLTOLUENE | 1,100 |
| HEPTANE | 64,000 |
| HEXANE | 240,000 |
| ST | 150 |
| 1,2,4–TMB | 170 |
| 1,3,5–TMB | 160 |
| 2,2,4–TMP | 85,000 |
| T | 7,600 |
| m,p–XYLENE | 2,100 |
| o–XYLENE | 480 |
| X | 2,500 |
| OTHER VOCs | <MDL |

| SG-21 | |
|---|---|
| 1/11/2016 | |
| SUB–SLAB | |
| B | 72 |
| CYCLOHEXANE | 16,000 |
| E | 32 |
| HEXANE | 180 |
| 1,2,4–TMB | 26 |
| 1,3,5–TMB | 9 |
| 2,2,4–TMP | 23,000 |
| PCE | 260 |
| T | 79 |
| m,p–X | 74 |
| o–X | 100 |
| X (TOTAL) | 174 |
| OTHER VOCs | <MDL |

| SG-15 | |
|---|---|
| 1/13/2016 | |
| 5.0 – 6.0' | |
| ACETONE | 43 |
| E | 7 |
| HEXANE | 32 |
| METH CHLR | 190 |
| MEK | 170 |
| 1,3,5–TMB | 9 |
| T | 23 |
| m,p–X | 22 |
| o–X | 7 |
| X (TOTAL) | 29 |
| OTHER VOCs | <MDL |

| SG-20 | |
|---|---|
| 1/13/2016 | |
| SUB–SLAB | |
| ACETONE | 22 |
| HEXANE | 29 |
| METH CHLR | 320 |
| T | 14 |
| m,p–X | 13 |
| o–X | 4 |
| X (TOTAL) | 17 |
| OTHER VOCs | <MDL |

| SG-19 | |
|---|---|
| 1/15/2016 | |
| 5.5 – 6.0' | |
| ACETONE | 620 |
| E | 12,000 |
| MEK | 960 |
| m,p–X | 49,000 |
| o–X | 19,000 |
| X (TOTAL) | 68,000 |
| OTHER VOCs | <MDL |

| SG-7S | |
|---|---|
| 10/06/2015 | |
| 5.5 –6.0' | |
| B | 5,400 |
| Chl | 940 |
| E | 13,000 |
| 4–ETHYLTOLUENE | 1,800 |
| HEPTANE | 8,500 |
| HEXANE | 16,000 |
| METH CHLR | 4,900 |
| ST | 260 |
| 1,2,4–TMB | 340 |
| 1,3,5–TMB | 210 |
| 2,2,4–TMP | 4,300 |
| T | 15,000 |
| m,p–X | 25,000 |
| o–X | 6,900 |
| X (TOTAL) | 31,900 |
| OTHER VOCs | <MDL |

| SG-7D | |
|---|---|
| 10/6/2015 | |
| 9.0 – 10.0' | |
| B | 390,000 |
| E | 130,000 |
| 4–ETHYLTOLUENE | 1,500 |
| HEPTANE | 6,700,000 |
| HEXANE | 2,700,000 |
| ST | 1,200 |
| 1,2,4–TMB | 240 |
| 1,3,5–TMB | 170 |
| 2,2,4–TMP | 1,200,000 |
| T | 290,000 |
| m,p–XYLENE | 190,000 |
| o–XYLENE | 37,000 |
| X | 227,000 |
| OTHER VOCs | <MDL |

| SG-18 | |
|---|---|
| 1/26/2016 | |
| 5.5 – 6.0' | |
| ACETONE | 34 |
| m–DICHLOROBENZENE | 20 |
| E | 10 |
| MEK | 230 |
| 1,2,4–TMB | 12 |
| PCE | 68 |
| T | 26 |
| m,p–X | 44 |
| o–X | 14 |
| X (TOTAL) | 58 |
| OTHER VOCs | <MDL |

| SG-11 | |
|---|---|
| 10/6/2015 | |
| 7.5 – 8.0' | |
| B | 730,000 |
| E | 220,000 |
| 4–ETHYLTOLUENE | 9,500 |
| HEPTANE | 7,900,000 |
| HEXANE | 3,100,000 |
| ST | 1,900 |
| 1,2,4–TMB | 1,300 |
| 1,3,5–TMB | 1,300 |
| 2,2,4–TMP | 1,300,000 |
| T | 420,000 |
| m,p–XYLENE | 310,000 |
| o–XYLENE | 57,000 |
| X | 367,000 |
| OTHER VOCs | <MDL |

| SG-6 | |
|---|---|
| 10/06/2015 | |
| 5.5 –6.0' | |
| ACETONE | 180 |
| Chl | 20 |
| E | 27 |
| 4–ETHYLTOLUENE | 67 |
| FREON 113 | 6.4 |
| HEPTANE | 66 |
| HEXANE | 600 |
| METH CHLR | 140 |
| ST | 6.2 |
| 1,2,4–TMB | 59 |
| 1,3,5–TMB | 18 |
| 2,2,4–TMP | 200 |
| PCE | 5 |
| T | 120 |
| TCE | 3.3 |
| TRICLFL METH | 100 |
| m,p–X | 100 |
| o–X | 42 |
| X (TOTAL) | 142 |
| OTHER VOCs | <MDL |

| SG-2 | |
|---|---|
| 10/06/2015 | |
| SUB–SLAB | |
| B | 82 |
| Chl | 19 |
| DICLFMETH | 510 |
| E | 29 |
| 4–ETHYLTOLUENE | 60 |
| HEPTANE | 230 |
| HEXANE | 620 |
| METH CHLR | 420 |
| ST | 3.5 |
| 1,2,4–TMB | 50 |
| 1,3,5–TMB | 13 |
| 2,2,4–TMP | 1,700 |
| PCE | 6.8 |
| T | 120 |
| TRICLFL METH | 64 |
| m,p–X | 110 |
| o–X | 34 |
| X (TOTAL) | 144 |
| OTHER VOCs | <MDL |

| SG-3 | |
|---|---|
| 10/06/2015 | |
| 7.5 – 8.0' | |
| ACETONE | 93 |
| B | 54 |
| CARBON DISF | 110 |
| Chl | 8.2 |
| DICLFMETH | 92 |
| E | 39 |
| 4–ETHYLTOLUENE | 57 |
| HEPTANE | 100 |
| HEXANE | 290 |
| METH CHLR | 180 |
| ST | 3.5 |
| 1,2,4–TMB | 44 |
| 1,3,5–TMB | 13 |
| 2,2,4–TMP | 750 |
| PCE | 3.6 |
| T | 110 |
| TCE | 2.1 |
| TRICLFL METH | 4.7 |
| m,p–X | 150 |
| o–X | 47 |
| X (TOTAL) | 197 |
| OTHER VOCs | <MDL |

| SG-5 | |
|---|---|
| 10/06/2015 | |
| 5.5 –6.0' | |
| ACETONE | 63 |
| B | 76 |
| Chl | 8.4 |
| E | 18 |
| 4–ETHYLTOLUENE | 54 |
| HEPTANE | 41 |
| HEXANE | 380 |
| METH CHLR | 65 |
| ST | 3.9 |
| 1,2,4–TMB | 42 |
| 1,3,5–TMB | 13 |
| 2,2,4–TMP | 150 |
| PCE | 2.1 |
| T | 51 |
| TCE | 2.9 |
| m,p–X | 77 |
| o–X | 33 |
| X (TOTAL) | 107 |
| OTHER VOCs | <MDL |

| SG-4 | |
|---|---|
| 10/06/2015 | |
| 6.0 – 7.0' | |
| CARBON DISF | 31 |
| Chl | 23 |
| E | 36 |
| 4–ETHYLTOLUENE | 63 |
| FREON 113 | 7.8 |
| HEPTANE | 39 |
| HEXANE | 300 |
| METH CHLR | 430 |
| PROPYLENE | 36 |
| ST | 3.4 |
| 1,2,4–TMB | 42 |
| 1,3,5–TMB | 14 |
| 2,2,4–TMP | 220 |
| PCE | 4.5 |
| T | 66 |
| TCE | 3.4 |
| TRICLFL METH | 6.3 |
| m,p–X | 140 |
| o–X | 44 |
| X (TOTAL) | 184 |
| OTHER VOCs | <MDL |

| SG-1 | | SG-1 | |
|---|---|---|---|
| 12/19/2014 | | 10/06/2015 | |
| SUB–SLAB | | SUB–SLAB | |
| ACETONE | 210 | E | 36 |
| B | 35 | 4–ETHYLTOLUENE | 87 |
| Chl | 15 | HEXANE | 260 |
| CYCLOHEXANE | 27 | ISOP ALCOHOL | 520 |
| m–DCB | | METH CHLR | 130 |
| E | 7.8 | MEK | 16 |
| HEXANE | 220 | ST | 7.2 |
| ISOP ALCOHOL | 27 | 1,2,4–TMB | 81 |
| METH CHLR | 160 | 1,3,5–TMB | 20 |
| MEK | 33 | 2,2,4–TMP | 16 |
| MMA | 16 | PCE | 4.5 |
| NAPH | 9.4 | T | 440 |
| 2,2,4–TMP | 25 | TCE | 6.4 |
| T | 26 | TRICLFL METH | 53 |
| m,p–X | 69 | m,p–X | 160 |
| o–X | 7.7 | o–X | 56 |
| X (TOTAL) | 76.7 | X (TOTAL) | 216 |
| OTHER VOCs | <MDL | OTHER VOCs | <MDL |

| SG-9 | |
|---|---|
| 10/6/2015 | |
| 5.5 – 6.0" | |
| B | 700,000 |
| E | 270,000 |
| 4–ETHYLTOLUENE | 29,000 |
| HEPTANE | 5,800,000 |
| HEXANE | 2,600,000 |
| ST | 5,800 |
| 1,2,4–TMB | 3,300 |
| 1,3,5–TMB | 2,600 |
| 2,2,4–TMP | 1,200,000 |
| T | 390,000 |
| m,p–XYLENE | 370,000 |
| o–XYLENE | 160,000 |
| X | 530,000 |
| OTHER VOCs | <MDL |

| SG-16 | |
|---|---|
| 1/13/2016 | |
| 6.0 – 7.0' | |
| ACETONE | 780 |
| E | 4,400 |
| m,p–X | 21,000 |
| o–X | 9,100 |
| X (TOTAL) | 30,100 |
| OTHER VOCs | <MDL |

## LEGEND:

- SUBJECT PROPERTY
- APPROXIMATE FORMER/ HISTORICAL SITE FEATURES
- W — WATER
- GAS — GAS
- SAN — SANITARY SEWER
- ST — STORM SEWER
- FO — FIBER OPTIC
- LIMITS OF UST BASIN
- PARCEL / LOT BOUNDARIES
- PL — PRODUCT LINE
- FUEL DISPENSER
- CATCH BASIN
- SOIL BORING
- SOIL BORING/MONITORING WELL
- SOIL GAS SAMPLE
- ECT SOIL BORING

| | |
|---|---|
| B | BENZENE |
| T | TOLUENE |
| E | ETHYLBENZENE |
| X | XYLENES |
| m,p–X | m,p-XYLENES |
| o–X | o-XYLENES |
| 1,2,4–TMB | 1,2,4-TRIMETHYLBENZENE |
| 1,3,5–TMB | 1,3,5-TRIMETHYLBENZENE |
| Chl | CHLOROFORM |
| NAPH | NAPHTHALENE |
| ST | STYRENE |
| TCE | TRICHLOROETHENE |
| PCE | TETRACHLOROETHENE |
| MEK | 2-BUTANONE (MEK) |
| MMA | METHYLMETHACRYLATE |
| METH CHLR | METHYLENE CHLORIDE |
| 2,2,4–TMP | 2,2,4-TRIMETHYLPENTANE |
| CHLOROB | CHLOROBENZENE |
| DICLFMETH | DICHLORODIFLUOROMETHANE |
| TRICLFL METH | TRICHLOROFLUOROMETHANE |
| CARBON DISF | CARBON DISULFIDE |
| VOCs | VOLATILE ORGANIC COMPOUNDS |
| MDL | METHOD DETECTION LIMIT |
| UNITs | µg/m³ (UNLESS NOTED) |
| | VALUE EXCEEDS APPLICABLE CRITERIA |

NOTES: REFER TO TABLES FOR SPECIFIC COMPOUNDS ANALYZED

PM ENVIRONMENTAL — Environmental & Engineering Services

# FIGURE 5

SOIL BORING/MONITORING WELL/SOIL GAS SAMPLE LOCATION MAP WITH SOIL ANALYTICAL RESULTS

PROJ:

BEACON & BRIDGE #8
110 EAST BROAD STREET
LINDEN, MI

| | | |
|---|---|---|
| THIS IS NOT A LEGAL SURVEY | DRN BY: ES/KS/ES | DATE: 10/23/2015 |
| VERIFY SCALE 0 — 40' | CHKD BY: CS | SCALE: 1" = 40' |
| IF NOT 1" ON THIS SHEET, ADJUST SCALES ACCORDINGLY. | FILE NAME: 01-4982-0-002F00R03 | |

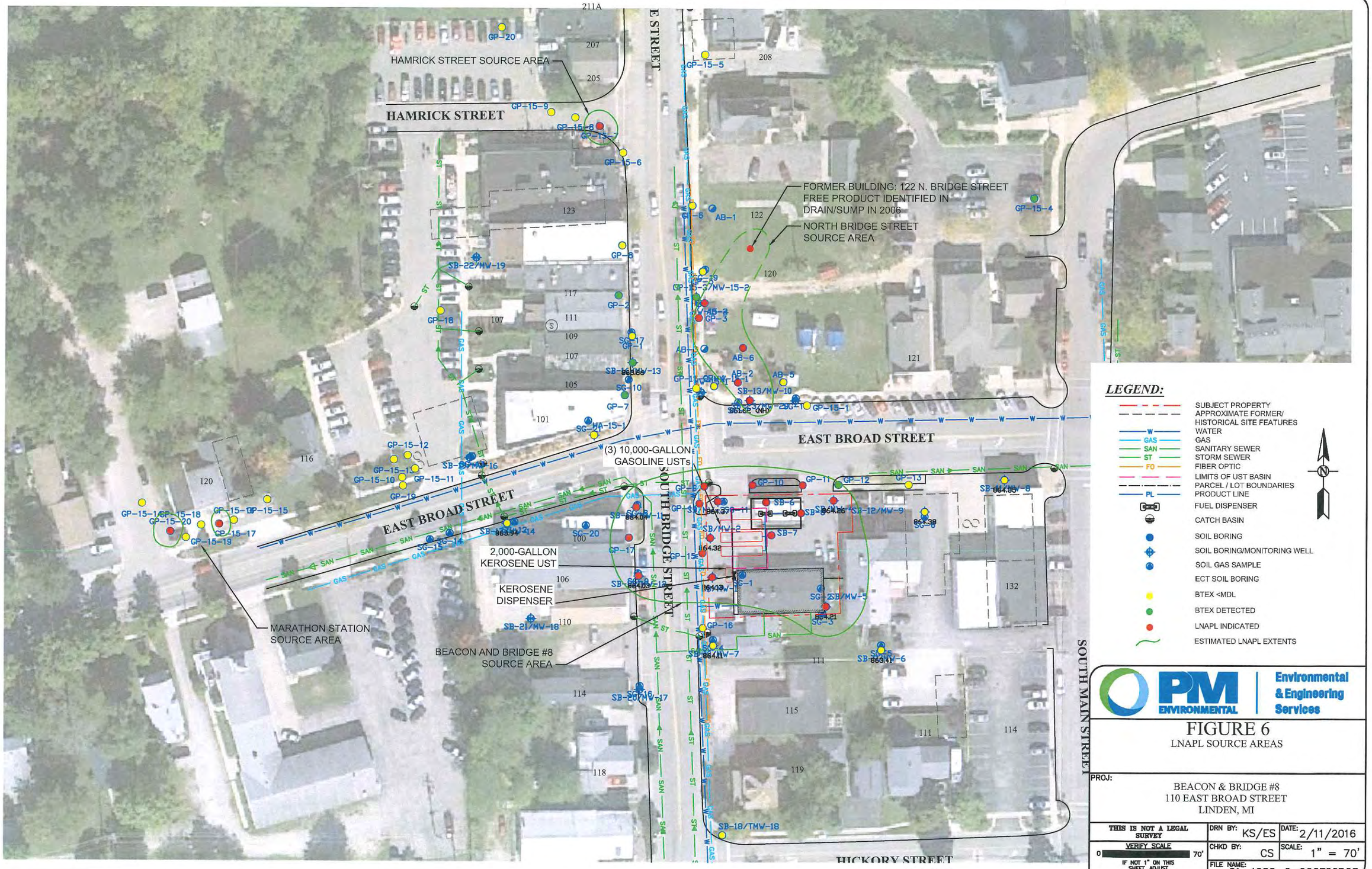


PM ENVIRONMENTAL | Environmental & Engineering Services

# FIGURE 6

LNAPL SOURCE AREAS

PROJ:

BEACON & BRIDGE #8
110 EAST BROAD STREET
LINDEN, MI

| | | |
|---|---|---|
| THIS IS NOT A LEGAL SURVEY | DRN BY: KS/ES | DATE: 2/11/2016 |
| VERIFY SCALE 0 70' IF NOT 1" ON THIS SHEET, ADJUST SCALES ACCORDINGLY. | CHKD BY: CS | SCALE: 1" = 70' |
| | FILE NAME: 01-4982-0-002F00R03 | |

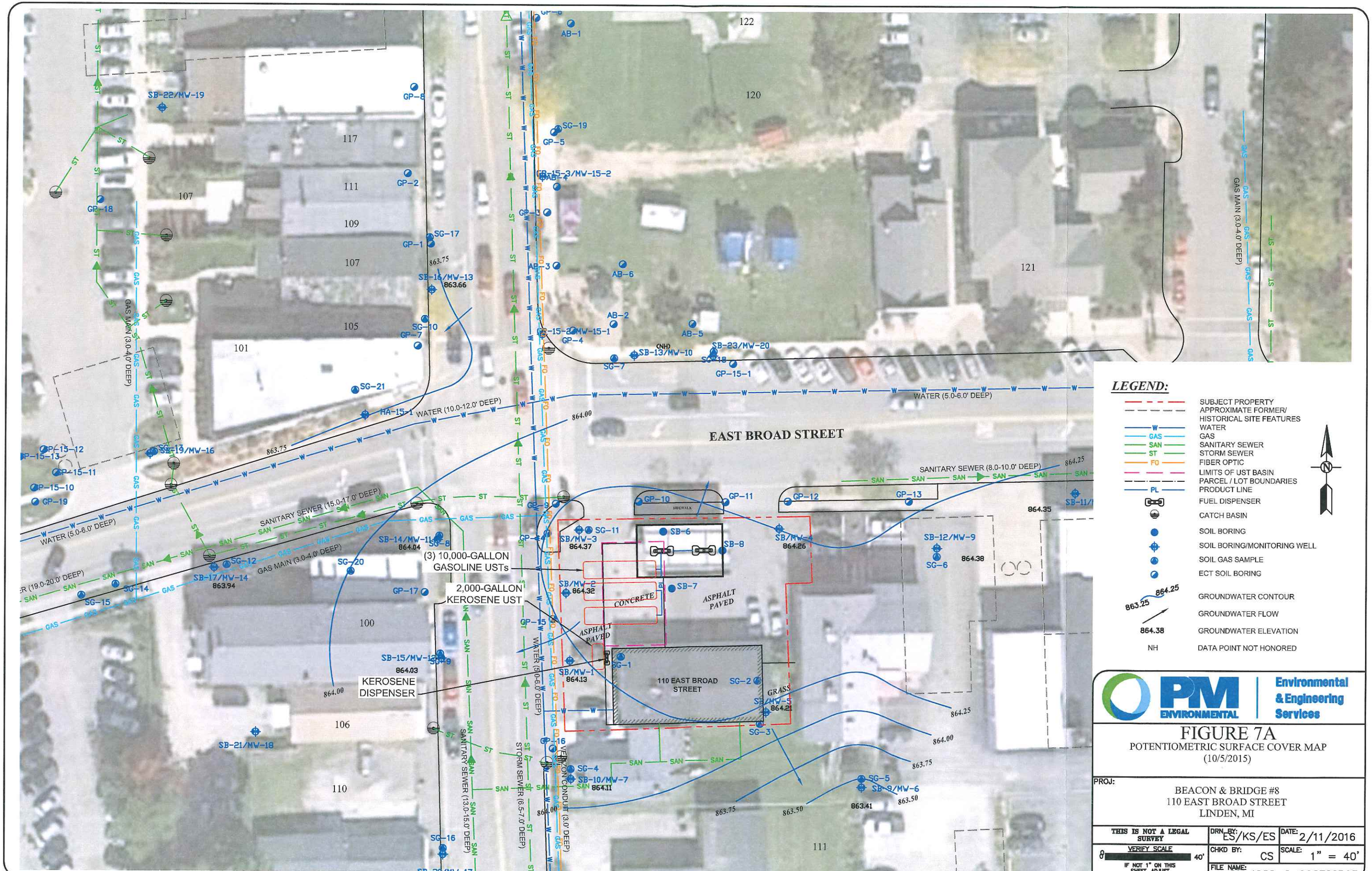


## LEGEND:

| | |
|---|---|
| | SUBJECT PROPERTY |
| | APPROXIMATE FORMER/ HISTORICAL SITE FEATURES |
| W | WATER |
| GAS | GAS |
| SAN | SANITARY SEWER |
| ST | STORM SEWER |
| FO | FIBER OPTIC |
| | LIMITS OF UST BASIN |
| | PARCEL / LOT BOUNDARIES |
| PL | PRODUCT LINE |
| | FUEL DISPENSER |
| | CATCH BASIN |
| | SOIL BORING |
| | SOIL BORING/MONITORING WELL |
| | SOIL GAS SAMPLE |
| | ECT SOIL BORING |
| 863.25 864.25 | GROUNDWATER CONTOUR |
| | GROUNDWATER FLOW |
| 864.38 | GROUNDWATER ELEVATION |
| NH | DATA POINT NOT HONORED |

PM ENVIRONMENTAL | Environmental & Engineering Services

# FIGURE 7A

POTENTIOMETRIC SURFACE COVER MAP
(10/5/2015)

PROJ:
BEACON & BRIDGE #8
110 EAST BROAD STREET
LINDEN, MI

| | | |
|---|---|---|
| THIS IS NOT A LEGAL SURVEY | DRN BY: ES/KS/ES | DATE: 2/11/2016 |
| VERIFY SCALE 0 40' IF NOT 1" ON THIS SHEET, ADJUST SCALES ACCORDINGLY. | CHKD BY: CS | SCALE: 1" = 40' |
| | FILE NAME: 01-4982-0-002F00R03 | |

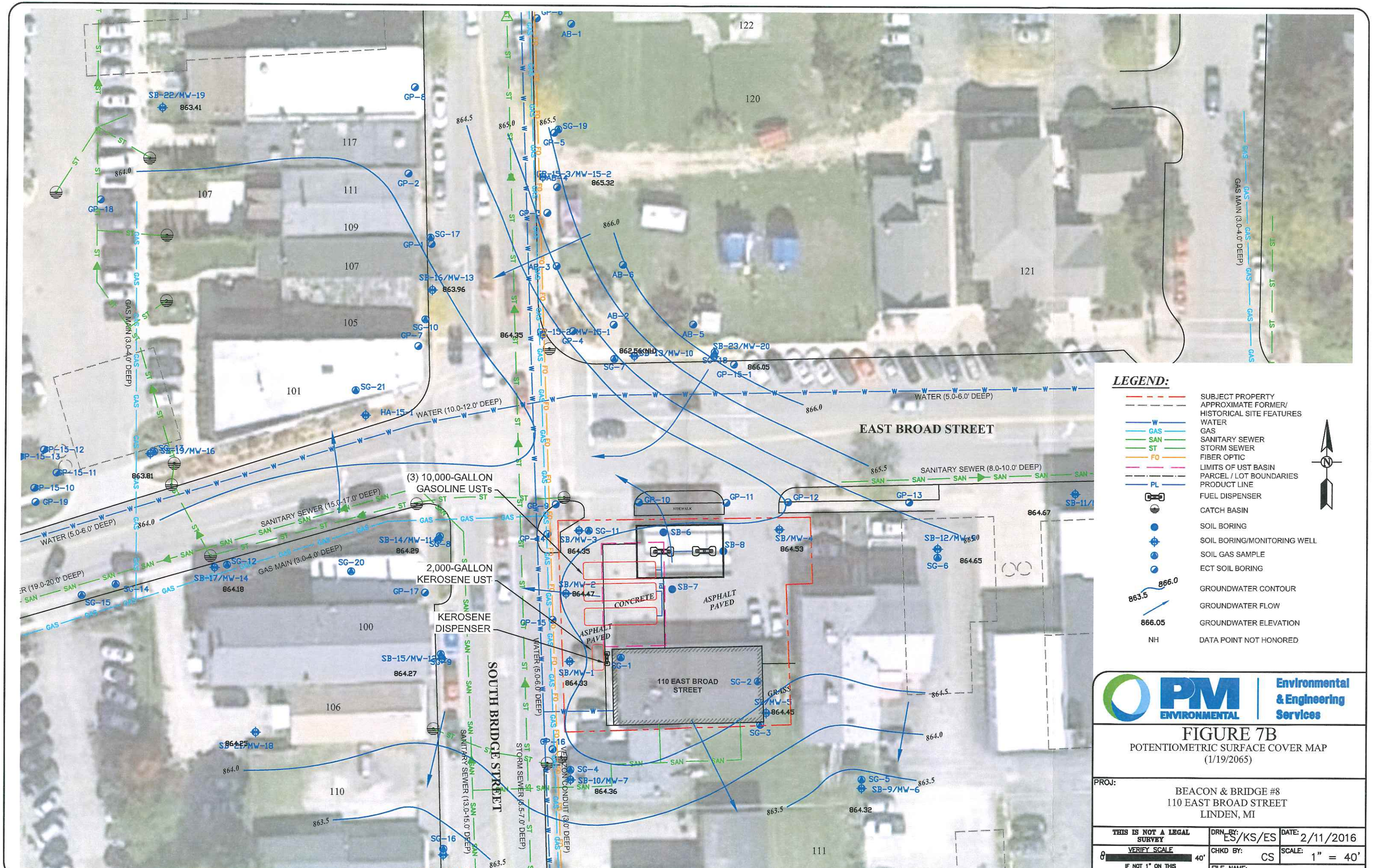


PM ENVIRONMENTAL | Environmental & Engineering Services

# FIGURE 7B

POTENTIOMETRIC SURFACE COVER MAP
(1/19/2065)

PROJ:
BEACON & BRIDGE #8
110 EAST BROAD STREET
LINDEN, MI

| | | |
|---|---|---|
| THIS IS NOT A LEGAL SURVEY | DRN BY: ES/KS/ES | DATE: 2/11/2016 |
| VERIFY SCALE 0 40' IF NOT 1" ON THIS SHEET, ADJUST SCALES ACCORDINGLY. | CHKD BY: CS | SCALE: 1" = 40' |
| | FILE NAME: 01-4982-0-002F00R03 | |

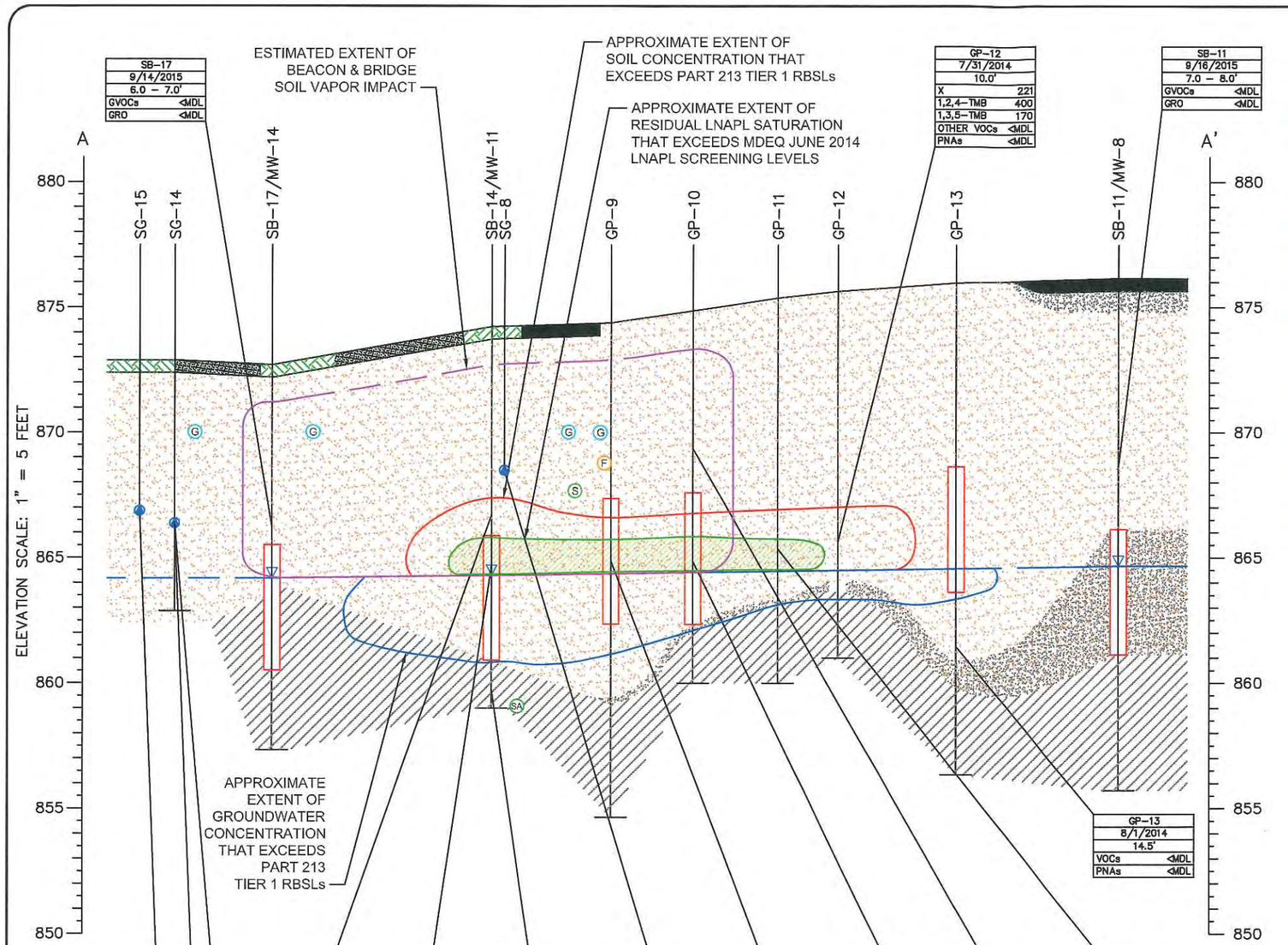


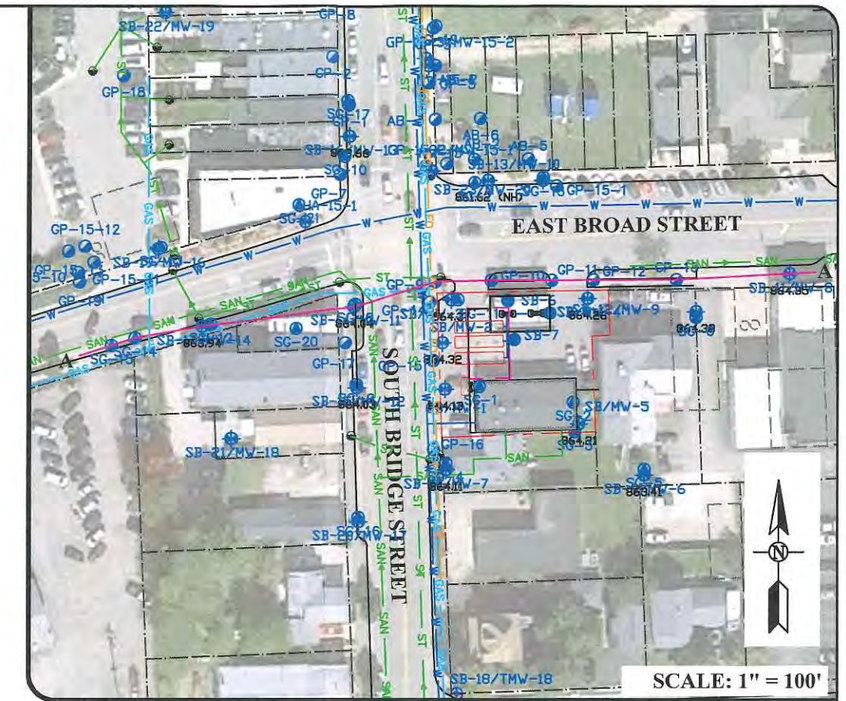


## LEGEND:

- FILL OR ASPHALT
- TOP SOIL
- SAND
- CLAY
- GRAVEL AND SAND
- GRAVEL
- CONCRETE
- GAS LINE
- SANITARY SEWER
- STORM SEWER
- FIBER OPTICS LINE
- SCREEN
- GROUNDWATER ELEVATION (JANUARY 19, 2016)
- LNAPL — LIGHT NON-AQUEOUS PHASE LIQUIDS
- RBSLs — RISK BASED SCREENING LEVELS
- SOIL GAS SAMPLE

| | |
|---|---|
| B | BENZENE |
| T | TOLUENE |
| E | ETHYLBENZENE |
| X | XYLENES |
| PCE | TETRACHLOROETHENE |
| MEK | 2-BUTANONE (MEK) |
| METH CHLR | METHYLENE CHLORIDE |
| 1,2,4-TMB | 1,2,4-TRIMETHYLBENZENE |
| 1,3,5-TMB | 1,3,5-TRIMETHYLBENZENE |
| 1,2,3-TMB | 1,2,3-TRIMETHYLBENZENE |
| ISOP | ISOPROPYLBENZENE |
| n-PROP | n-PROPYLBENZENE |
| sec-BUTYLB | sec-BUTYLBENZENE |
| 2-M | 2-METHYLNAPHTHALENE |
| NAPH | NAPHTHALENE |
| VOCs | VOLATILE ORGANIC COMPOUNDS |
| PNAs | POLYNUCLEAR AROMATIC COMPOUNDS |
| GVOCs | GASOLINE RANGE VOLATILE ORGANIC COMPOUNDS |
| GRO | GASOLINE RANGE ORGANICS |
| MDL | METHOD DETECTION LIMIT |
| UNITs | µg/Kg (UNLESS NOTED) |
| | VALUE EXCEEDS APPLICABLE CRITERIA |
| NOTES: | REFER TO TABLES FOR SPECIFIC COMPOUNDS ANALYZED |

5'
0
0
60'
SCALE

PM ENVIRONMENTAL — Environmental & Engineering Services

# FIGURE 8A

CONCEPTUAL CROSS SECTION A-A' WITH SOIL AND SOIL GAS ANALYTICAL RESULTS

PROJ:

BEACON & BRIDGE #8
110 EAST BROAD STREET
LINDEN, MI

THIS IS NOT A LEGAL SURVEY

VERIFY SCALE
0 NOTED
IF NOT 1" ON THIS SHEET, ADJUST SCALES ACCORDINGLY.

| | | |
|---|---|---|
| DRN BY: ES/KS/ES | DATE: 2/10/2016 | |
| CHKD BY: CS | SCALE: NOTED | |
| FILE NAME: 01-4982-0-002F00R03 | | |

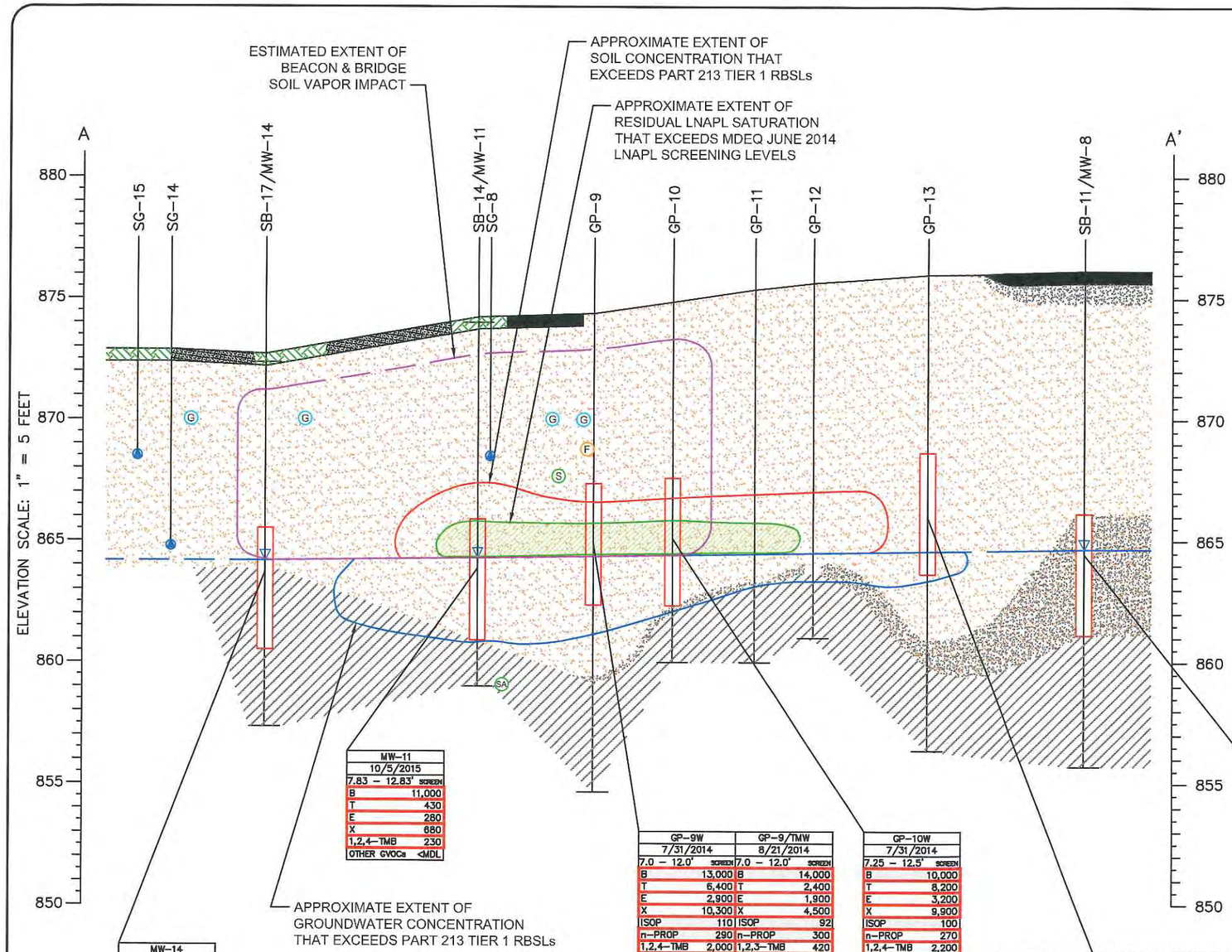


| MW-14 | |
|---|---|
| 10/5/2015 | |
| 6.48 – 11.48' SCREEN | |
| GVOCs | <MDL |

| MW-11 | |
|---|---|
| 10/5/2015 | |
| 7.83 – 12.83' SCREEN | |
| B | 11,000 |
| T | 430 |
| E | 280 |
| X | 680 |
| 1,2,4-TMB | 230 |
| OTHER GVOCs | <MDL |

| GP-9W | | GP-9/TMW | |
|---|---|---|---|
| 7/31/2014 | | 8/21/2014 | |
| 7.0 – 12.0' SCREEN | | 7.0 – 12.0' SCREEN | |
| B | 13,000 | B | 14,000 |
| T | 6,400 | T | 2,400 |
| E | 2,900 | E | 1,900 |
| X | 10,300 | X | 4,500 |
| ISOP | 110 | ISOP | 92 |
| n-PROP | 290 | n-PROP | 300 |
| 1,2,4-TMB | 2,000 | 1,2,3-TMB | 420 |
| 1,3,5-TMB | 530 | 1,2,4-TMB | 1,200 |
| NAPH | 760 | 1,3,5-TMB | 310 |
| ST | 110 | NAPH | 600 |
| OTHER VOCs | <MDL | 2-M | 140 |
| 2-M | 110 | CYCLOHEXANE | 160 |
| NAPH | 490 | OTHER VOCs | <MDL |
| OTHER PNAs | <MDL | | |

| GP-10W | |
|---|---|
| 7/31/2014 | |
| 7.25 – 12.5' SCREEN | |
| B | 10,000 |
| T | 8,200 |
| E | 3,200 |
| X | 9,900 |
| ISOP | 100 |
| n-PROP | 270 |
| 1,2,4-TMB | 2,200 |
| 1,3,5-TMB | 350 |
| NAPH | 670 |
| OTHER VOCs | <MDL |
| 2-M | 89 |
| NAPH | 370 |
| OTHER PNAs | <MDL |

| GP-13W | | GP-13/TMW | | GP-13/TMW (DUP) | |
|---|---|---|---|---|---|
| 8/1/2014 | | 8/21/2014 | | 8/21/2014 | |
| 7.5 – 12.5' SCREEN | | 7.5 – 12.5' SCREEN | | 7.5 – 12.5' SCREEN | |
| B | 31 | B | 35 | B | 35 |
| T | 2 | T | 2.2 | T | 2.1 |
| E | 110 | E | 97 | E | 98 |
| ISOP | 21 | ISOP | 20 | ISOP | 22 |
| n-PROP | 40 | n-PROP | 39 | n-PROP | 41 |
| 1,2,4-TMB | 18 | 1,2,3-TMB | 11 | 1,2,3-TMB | 12 |
| sec-BUTYLB | 4 | 1,2,4-TMB | 1.7 | 1,2,4-TMB | 2 |
| OTHER VOCs | <MDL | MEK | 8.4 | MEK | 6.2 |
| | | CYCLOHEXANE | 7.4 | CYCLOHEXANE | 7.5 |
| | | sec-BUTYLB | 3.5 | sec-BUTYLB | 3.6 |
| | | OTHER VOCs | <MDL | OTHER VOCs | <MDL |

| MW-8 | |
|---|---|
| 10/5/2015 | |
| 9.18 – 14.18' SCREEN | |
| GVOCs | <MDL |

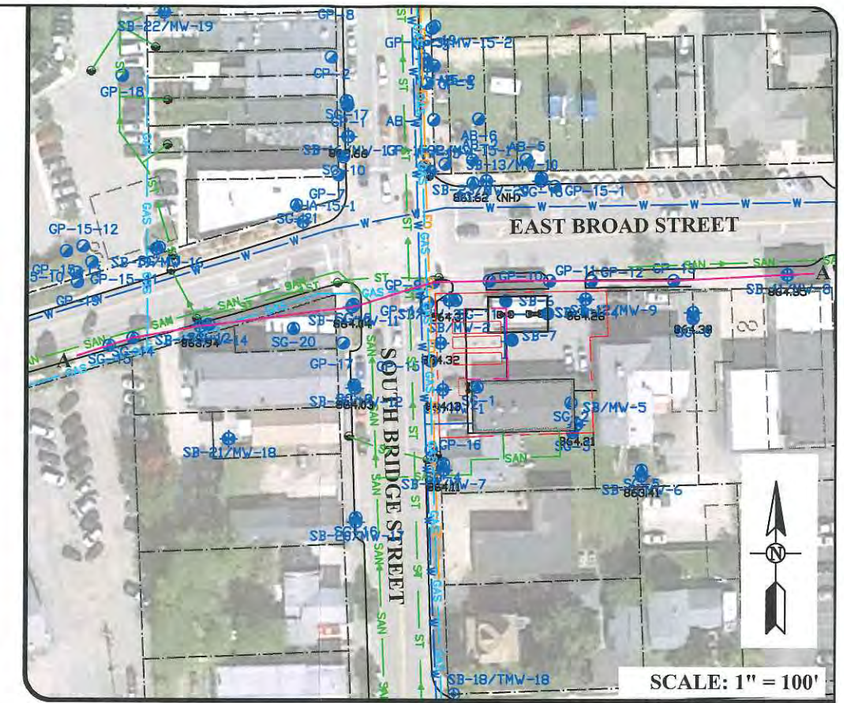


## LEGEND:

- FILL OR ASPHALT
- TOP SOIL
- SAND
- CLAY
- GRAVEL AND SAND
- GRAVEL
- CONCRETE
- GAS LINE
- SANITARY SEWER
- STORM SEWER
- FIBER OPTICS LINE
- SCREEN
- GROUNDWATER ELEVATION (JANUARY 19, 2016)
- LNAPL — LIGHT NON-AQUEOUS PHASE LIQUIDS
- RBSLs — RISK BASED SCREENING LEVELS
- SOIL GAS SAMPLE

| | |
|---|---|
| B | BENZENE |
| T | TOLUENE |
| E | ETHYLBENZENE |
| X | XYLENES |
| 1,2,4-TMB | 1,2,4-TRIMETHYLBENZENE |
| GVOCs | GASOLINE RANGE VOLATILE ORGANIC COMPOUNDS |
| MDL | METHOD DETECTION LIMIT |
| UNITs | µg/L (UNLESS NOTED) |
| | VALUE EXCEEDS APPLICABLE CRITERIA |
| NOTES: | REFER TO TABLES FOR SPECIFIC COMPOUNDS ANALYZED |

5'
0
0 60'
SCALE

PM ENVIRONMENTAL | Environmental & Engineering Services

# FIGURE 8B

CONCEPTUAL CROSS SECTION A-A' WITH GROUNDWATER ANALYTICAL RESULTS

PROJ:
BEACON & BRIDGE #8
110 EAST BROAD STREET
LINDEN, MI

THIS IS NOT A LEGAL SURVEY

VERIFY SCALE
0 NOTED
IF NOT 1" ON THIS SHEET, ADJUST SCALES ACCORDINGLY.

DRN BY: ES/KS/ES
DATE: 2/10/2016
CHKD BY: CS
SCALE: NOTED
FILE NAME: 01-4982-0-002F00R03

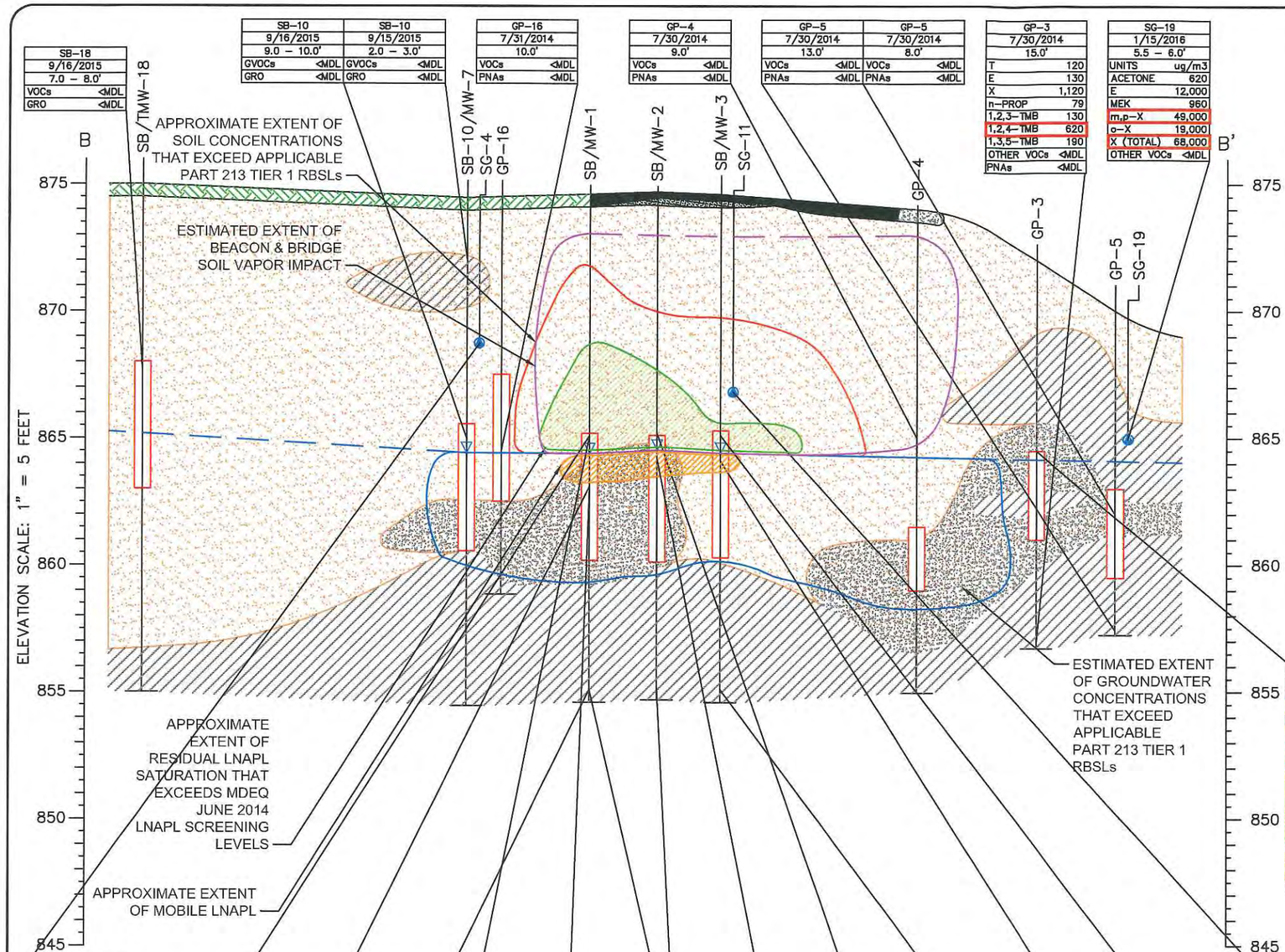


| SB-18 | |
|---|---|
| 9/16/2015 | |
| 7.0 – 8.0' | |
| VOCs | <MDL |
| GRO | <MDL |

| SB-10 | SB-10 |
|---|---|
| 9/16/2015 | 9/15/2015 |
| 9.0 – 10.0' | 2.0 – 3.0' |
| GVOCs | <MDL |
| GRO | <MDL |

| GP-16 |
|---|
| 7/31/2014 |
| 10.0' |
| VOCs | <MDL |
| PNAs | <MDL |

| GP-4 |
|---|
| 7/30/2014 |
| 9.0' |
| VOCs | <MDL |
| PNAs | <MDL |

| GP-5 | GP-5 |
|---|---|
| 7/30/2014 | 7/30/2014 |
| 13.0' | 8.0' |
| VOCs | <MDL |
| PNAs | <MDL |

| GP-3 | |
|---|---|
| 7/30/2014 | |
| 15.0' | |
| T | 120 |
| E | 130 |
| X | 1,120 |
| n-PROP | 79 |
| 1,2,3-TMB | 130 |
| 1,2,4-TMB | 620 |
| 1,3,5-TMB | 190 |
| OTHER VOCs | <MDL |
| PNAs | <MDL |

| SG-19 | |
|---|---|
| 1/15/2016 | |
| 5.5 – 6.0' | |
| UNITS | ug/m3 |
| ACETONE | 620 |
| E | 12,000 |
| MEK | 960 |
| m,p-X | 49,000 |
| o-X | 19,000 |
| X (TOTAL) | 68,000 |
| OTHER VOCs | <MDL |

| SG-4 | |
|---|---|
| 10/06/2015 | |
| 6.0 – 7.0' | |
| UNITS | ug/m3 |
| CARBON DISF | 31 |
| Chl | 23 |
| E | 36 |
| 4-ETHYLTOLUENE | 63 |
| FREON 113 | 7.8 |
| HEPTANE | 39 |
| HEXANE | 300 |
| METH CHLR | 430 |
| PROPYLENE | 36 |
| ST | 3.4 |
| 1,2,4-TMB | 42 |
| 1,3,5-TMB | 14 |
| 2,2,4-TMP | 220 |
| PCE | 4.5 |
| T | 66 |
| TCE | 3.4 |
| TRICLFL METH | 6.3 |
| m,p-X | 140 |
| o-X | 44 |
| X (TOTAL) | 184 |
| OTHER VOCs | <MDL |

| SB-1 | SB-1 | SB-1 |
|---|---|---|
| 12/18/2014 | 12/18/2014 | 12/18/2014 |
| 9.0 – 10.0' | 11.0 – 12.0' | 19.0 – 20.0' |
| B | 8,100 | B | 830 | VOCs | <MDL |
| T | 150,000 | T | 460 | | |
| E | 71,000 | E | 4,300 | | |
| X | 380,000 | X | 7,800 | | |
| ISOP | 9,200 | ISOP | 290 | | |
| n-PROP | 31,000 | n-PROP | 720 | | |
| 1,2,3-TMB | 65,000 | 1,2,3-TMB | 1,200 | | |
| 1,2,4-TMB | 230,000 | 1,2,4-TMB | 4,400 | | |
| 1,3,5-TMB | 65,000 | 1,3,5-TMB | 930 | | |
| NAPH | 35,000 | NAPH | 1,100 | | |
| 2-M | 32,000 | OTHER VOCs | <MDL | | |
| OTHER VOCs | <MDL | GRO | 37,000 | | |
| GRO | 2,800,000 | | | | |

| SB-1 (ECT) | SB-1 (ECT) | SB-1 (ECT) |
|---|---|---|
| 12/18/2014 | 12/18/2014 | 12/18/2014 |
| 9.0 – 10.0' | 11.0 – 12.0' | 19.0 – 20.0' |
| B | 24,000 | B | 4,100 | VOCs | <MDL |
| T | 350,000 | T | 6,100 | | |
| E | 160,000 | E | 5,100 | | |
| X | 840,000 | X | 18,600 | | |
| ISOP | 17,000 | ISOP | 370 | | |
| sec-BUTYLB | 8,200 | n-PROP | 1,400 | | |
| n-PROP | 69,000 | 1,2,4-TMB | 9,600 | | |
| 1,2,4-TMB | 460,000 | 1,3,5-TMB | 2,700 | | |
| 1,3,5-TMB | 130,000 | NAPH | 1,700 | | |
| NAPH | 67,000 | OTHER VOCs | <MDL | | |
| 2-M | 74,000 | | | | |
| OTHER VOCs | <MDL | | | | |

| SB-2 | SB-2 | SB-2 |
|---|---|---|
| 12/18/2014 | 12/18/2014 | 12/18/2014 |
| 19.0 – 20.0' | 10.0 – 11.0' | 9.0 – 10.0' |
| T | 77 | B | 960 | B | 56,000 |
| E | 58 | T | 960 | T | 520,000 |
| X | 240 | E | 1,300 | E | 200,000 |
| 1,2,3-TMB | 58 | X | 4,900 | X | 1,000,000 |
| 1,2,4-TMB | 170 | ISOP | 310 | ISOP | 23,000 |
| 1,3,5-TMB | 56 | n-PROP | 1,000 | n-PROP | 77,000 |
| OTHER VOCs | <MDL | 1,2,3-TMB | 1,100 | 1,2,3-TMB | 150,000 |
| | | 1,2,4-TMB | 3,300 | 1,2,4-TMB | 510,000 |
| | | 1,3,5-TMB | 900 | 1,3,5-TMB | 150,000 |
| | | NAPH | 1,500 | NAPH | 68,000 |
| | | 2-M | 1,200 | 2-M | 57,000 |
| | | OTHER VOCs | <MDL | OTHER VOCs | <MDL |
| | | GRO | 46,000 | GRO | 4,900,000 |

| SB-3 (ECT) |
|---|
| 12/18/2014 |
| 19.0 – 20.0' |
| VOCs | <MDL |

| SB-3 | SB-3 |
|---|---|
| 12/18/2014 | 12/18/2014 |
| 10.0 – 11.0' | 9.0 – 10.0' |
| B | 2,700 | B | 29,000 |
| T | 680 | T | 190,000 |
| E | 980 | E | 150,000 |
| X | 1,300 | X | 700,000 |
| ISOP | 150 | ISOP | 19,000 |
| n-PROP | 470 | n-PROP | 63,000 |
| 1,2,3-TMB | 250 | 1,2,3-TMB | 120,000 |
| 1,2,4-TMB | 440 | 1,2,4-TMB | 410,000 |
| 1,3,5-TMB | 140 | 1,3,5-TMB | 120,000 |
| NAPH | 990 | NAPH | 57,000 |
| 2-M | 680 | 2-M | 48,000 |
| OTHER VOCs | <MDL | OTHER VOCs | <MDL |
| GRO | 16,000 | GRO | 5,700,000 |

| GP-3 |
|---|
| 7/30/2014 |
| 7.0 – 8.0' |
| B | 940 |
| T | 2,900 |
| E | 13,000 |
| X | 253,000 |
| ISOP | 2,600 |
| n-PROP | 9,000 |
| 1,2,3-TMB | 35,000 |
| 1,2,4-TMB | 150,000 |
| 1,3,5-TMB | 45,000 |
| NAPH | 21,000 |
| 2-M | 21,000 |
| OTHER VOCs | <MDL |
| 2-M | 11,000 |
| NAPH | 9,200 |
| OTHER PNAs | <MDL |

| SG-11 |
|---|
| 10/6/2015 |
| 7.5 – 8.0' |
| UNITS | ug/m3 |
| B | 730,000 |
| E | 220,000 |
| 4-ETHYLTOLUENE | 9,500 |
| HEPTANE | 7,900,000 |
| HEXANE | 3,100,000 |
| ST | 1,900 |
| 1,2,4-TMB | 1,300 |
| 1,3,5-TMB | 1,300 |
| 2,2,4-TMP | 1,300,000 |
| T | 420,000 |
| m,p-XYLENE | 310,000 |
| o-XYLENE | 57,000 |
| X | 367,000 |
| OTHER VOCs | <MDL |

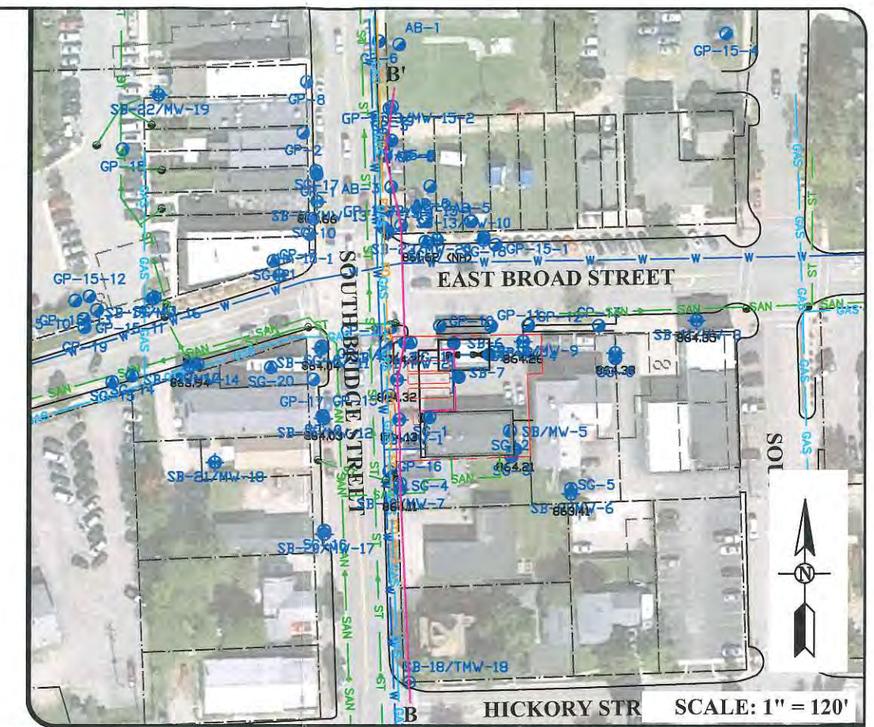


## LEGEND:

- FILL OR ASPHALT
- TOP SOIL
- SAND
- CLAYEY SAND
- CLAY
- GRAVEL AND SAND
- GRAVEL
- CONCRETE
- SCREEN
- GROUNDWATER ELEVATION (JANUARY 19, 2016)
- LNAPL — LIGHT NON-AQUEOUS PHASE LIQUIDS
- RBSLs — RISK BASED SCREENING LEVELS
- SOIL GAS SAMPLE LOCATION

| | |
|---|---|
| B | BENZENE |
| T | TOLUENE |
| E | ETHYLBENZENE |
| X | XYLENES |
| PCE | TETRACHLOROETHENE |
| MEK | 2-BUTANONE (MEK) |
| METH CHLR | METHYLENE CHLORIDE |
| 1,2,4-TMB | 1,2,4-TRIMETHYLBENZENE |
| 1,3,5-TMB | 1,3,5-TRIMETHYLBENZENE |
| 1,2,3-TMB | 1,2,3-TRIMETHYLBENZENE |
| ISOP | ISOPROPYLBENZENE |
| n-PROP | n-PROPYLBENZENE |
| sec-BUTYLB | sec-BUTYLBENZENE |
| 2-M | 2-METHYLNAPHTHALENE |
| NAPH | NAPHTHALENE |
| ST | STYRENE |
| TCE | TRICHLOROETHENE |
| Chl | CHLOROFORM |
| CARBON DISF | CARBON DISULFIDE |
| 2,2,4-TMP | 2,2,4-TRIMETHYLPENTANE |
| TRICLFL METH | TRICHLOROFLUOROMETHANE |
| GRO | GASOLINE RANGE ORGANICS |
| VOCs | VOLATILE ORGANIC COMPOUNDS |
| GVOCs | GASOLINE VOLATILE ORGANIC COMPOUNDS |
| PNAs | POLYNUCLEAR AROMATIC COMPOUNDS |
| MDL | METHOD DETECTION LIMIT |
| UNITS | µg/Kg (UNLESS NOTED) |
| | VALUE EXCEEDS APPLICABLE CRITERIA |
| NOTES: | REFER TO TABLES FOR SPECIFIC COMPOUNDS ANALYZED |

5' 0 — 0 60' SCALE

PM ENVIRONMENTAL — Environmental & Engineering Services

# FIGURE 9A

CONCEPTUAL CROSS SECTION B-B' WITH SOIL AND SOIL GAS ANALYTICAL RESULTS

PROJ:

BEACON & BRIDGE #8
110 EAST BROAD STREET
LINDEN, MI

THIS IS NOT A LEGAL SURVEY

VERIFY SCALE: 0 — NOTED

IF NOT 1" ON THIS SHEET, ADJUST SCALES ACCORDINGLY.

| | | |
|---|---|---|
| DRN BY: ES/KS/ES | DATE: 2/10/2016 | |
| CHKD BY: CS | SCALE: NOTED | |
| FILE NAME: 01-4982-0-002F00R03 | | |

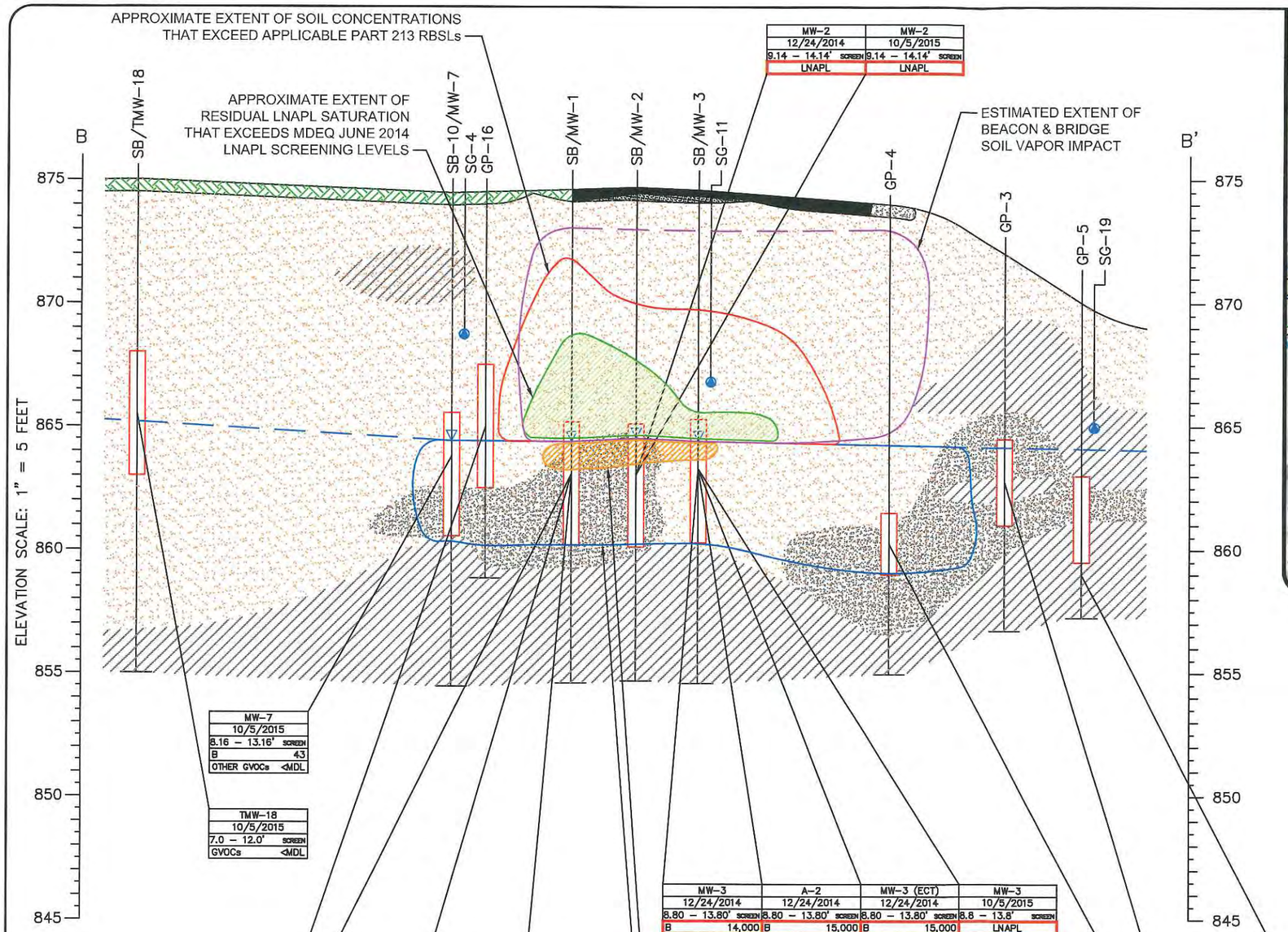


| MW-2 | MW-2 |
|---|---|
| 12/24/2014 | 10/5/2015 |
| 9.14 – 14.14' SCREEN | 9.14 – 14.14' SCREEN |
| LNAPL | LNAPL |

| MW-7 |
|---|
| 10/5/2015 |
| 8.16 – 13.16' SCREEN |
| B 43 |
| OTHER GVOCs <MDL |

| TMW-18 |
|---|
| 10/5/2015 |
| 7.0 – 12.0' SCREEN |
| GVOCs <MDL |

| MW-1 | MW-1 (ECT) | MW-1 |
|---|---|---|
| 12/24/2014 | 12/24/2014 | 10/5/2015 |
| 9.00 – 14.0' SCREEN | 9.00 – 14.00' SCREEN | 9.0 – 14.0' SCREEN |
| B 130 | B 97 | B 5,400 |
| T 420 | T 260 | T 870 |
| E 150 | E 110 | E 2,400 |
| X 660 | X 430 | X 3,700 |
| ISOP 10 | ISOP 6 | ISOP 62 |
| n-PROP 25 | n-PROP 21 | n-PROP 130 |
| 1,2,3-TMB 60 | 1,2,3-TMB 32 | 1,2,3-TMB 360 |
| 1,2,4-TMB 190 | 1,2,4-TMB 130 | 1,2,4-TMB 1,000 |
| 1,3,5-TMB 51 | 1,3,5-TMB 36 | 1,3,5-TMB 200 |
| NAPH 30 | NAPH 23 | OTHER GVOCs <MDL |
| OTHER VOCs <MDL | 2-M 9 | |
| | OTHER VOCs <MDL | |

| MW-3 | A-2 | MW-3 (ECT) | MW-3 |
|---|---|---|---|
| 12/24/2014 | 12/24/2014 | 12/24/2014 | 10/5/2015 |
| 8.80 – 13.80' SCREEN | 8.80 – 13.80' SCREEN | 8.80 – 13.80' SCREEN | 8.8 – 13.8' SCREEN |
| B 14,000 | B 15,000 | B 15,000 | LNAPL |
| T 430 | T 460 | T 530 | |
| E 1,700 | E 1,800 | E 1,600 | |
| X 1,300 | X 1,400 | X 1,580 | |
| ISOP 81 | ISOP 88 | ISOP 72 | |
| n-PROP 180 | n-PROP 190 | n-PROP 190 | |
| 1,2,4-TMB 160 | 1,2,3-TMB 320 | 1,2,3-TMB 240 | |
| NAPH 320 | 1,2,4-TMB 190 | 1,2,4-TMB 250 | |
| OTHER VOCs <MDL | NAPH 350 | 1,3,5-TMB 61 | |
| | OTHER VOCs <MDL | NAPH 430 | |
| | | OTHER VOCs <MDL | |

| GP-4W |
|---|
| 7/30/2014 |
| 12.5 – 15.0' SCREEN |
| B 4,200 |
| T 80 |
| E 280 |
| X 254 |
| MTBE 5 |
| ISOP 17 |
| n-PROP 27 |
| 1,2,4-TMB 130 |
| 1,3,5-TMB 2 |
| NAPH 77 |
| OTHER VOCs <MDL |
| NAPH 33 |
| OTHER PNAs <MDL |

| GP-3W |
|---|
| 7/30/2014 |
| 7.5 – 11.0' SCREEN |
| B 3,500 |
| T 1,800 |
| E 1,900 |
| X 25,500 |
| ISOP 97 |
| n-PROP 220 |
| 1,2,4-TMB 4,100 |
| 1,3,5-TMB 1,100 |
| NAPH 950 |
| OTHER VOCs <MDL |
| 2-M 340 |
| FL 14 |
| NAPH 720 |
| Ph 10 |
| Py 13 |
| OTHER PNAs <MDL |

| GP-5W |
|---|
| 7/30/2014 |
| 7.0 – 15.0' SCREEN |
| MTBE 1 |
| OTHER VOCs <MDL |
| PNAs <MDL |

| GP-16W | GP-16W (DUP) | GP-16/TMW | GP-16/TMW (DUP) |
|---|---|---|---|
| 8/1/2014 | 8/1/2014 | 8/21/2014 | 8/21/2014 |
| 7.0 – 12.0' SCREEN | 7.0 – 12.0' SCREEN | 7.0 – 12.0' SCREEN | 7.0 – 12.0' SCREEN |
| B 2 | B 2 | VOCs <MDL | VOCs <MDL |
| OTHER VOCs <MDL | OTHER VOCs <MDL | | |

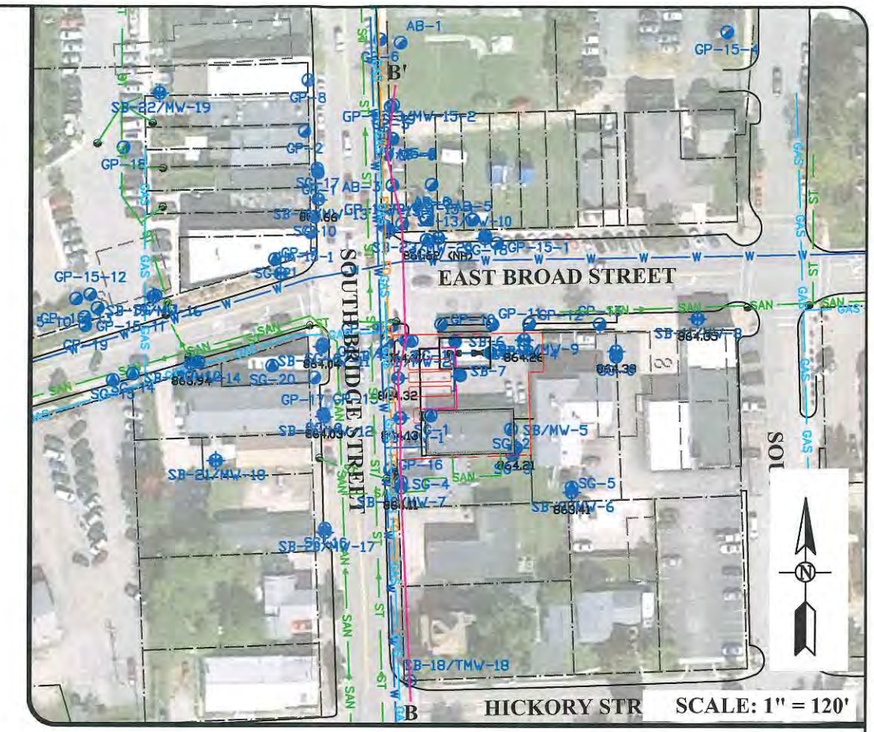


## LEGEND:

| | | | |
|---|---|---|---|
| | FILL OR ASPHALT | B | BENZENE |
| | TOP SOIL | T | TOLUENE |
| | SAND | E | ETHYLBENZENE |
| | CLAYEY SAND | X | XYLENES |
| | CLAY | 1,2,4-TMB | 1,2,4-TRIMETHYLBENZENE |
| | GRAVEL AND SAND | 1,3,5-TMB | 1,3,5-TRIMETHYLBENZENE |
| | GRAVEL | 1,2,3-TMB | 1,2,3-TRIMETHYLBENZENE |
| | CONCRETE | ISOP | ISOPROPYLBENZENE |
| | | n-PROP | n-PROPYLBENZENE |
| | | sec-BUTYLB | sec-BUTYLBENZENE |
| | | 2-M | 2-METHYLNAPHTHALENE |
| | | NAPH | NAPHTHALENE |
| | | FL | FLUORANTHENE |
| | | Ph | PHENANTHRENE |
| | | Py | PYRENE |
| | | MTBE | METHYL TERT BUTYL ETHER |
| | SCREEN | VOCs | VOLATILE ORGANIC COMPOUNDS |
| | | PNAs | POLYNUCLEAR AROMATIC COMPOUNDS |
| | | GVOCs | GASOLINE RANGE VOLATILE ORGANIC COMPOUNDS |
| | GROUNDWATER ELEVATION (JANUARY 19, 2016) | MDL | METHOD DETECTION LIMIT |
| LNAPL | LIGHT NON-AQUEOUS PHASE LIQUIDS | UNITs | µg/L (UNLESS NOTED) |
| | | | VALUE EXCEEDS APPLICABLE CRITERIA |
| RBSLs | RISK BASED SCREENING LEVELS | NOTES: | REFER TO TABLES FOR SPECIFIC COMPOUNDS ANALYZED |
| | SOIL GAS SAMPLE LOCATION | | |

5'
0
0
60'
SCALE

PM ENVIRONMENTAL | Environmental & Engineering Services

# FIGURE 9B

CONCEPTUAL CROSS SECTION B-B' WITH GROUNDWATER ANALYTICAL RESULTS

PROJ:

BEACON & BRIDGE #8
110 EAST BROAD STREET
LINDEN, MI

| | | |
|---|---|---|
| THIS IS NOT A LEGAL SURVEY | DRN BY: ES/KS/ES | DATE: 2/10/2016 |
| VERIFY SCALE 0 NOTED | CHKD BY: CS | SCALE: NOTED |
| IF NOT 1" ON THIS SHEET, ADJUST SCALES ACCORDINGLY. | FILE NAME: 01-4982-0-002F00R03 | |

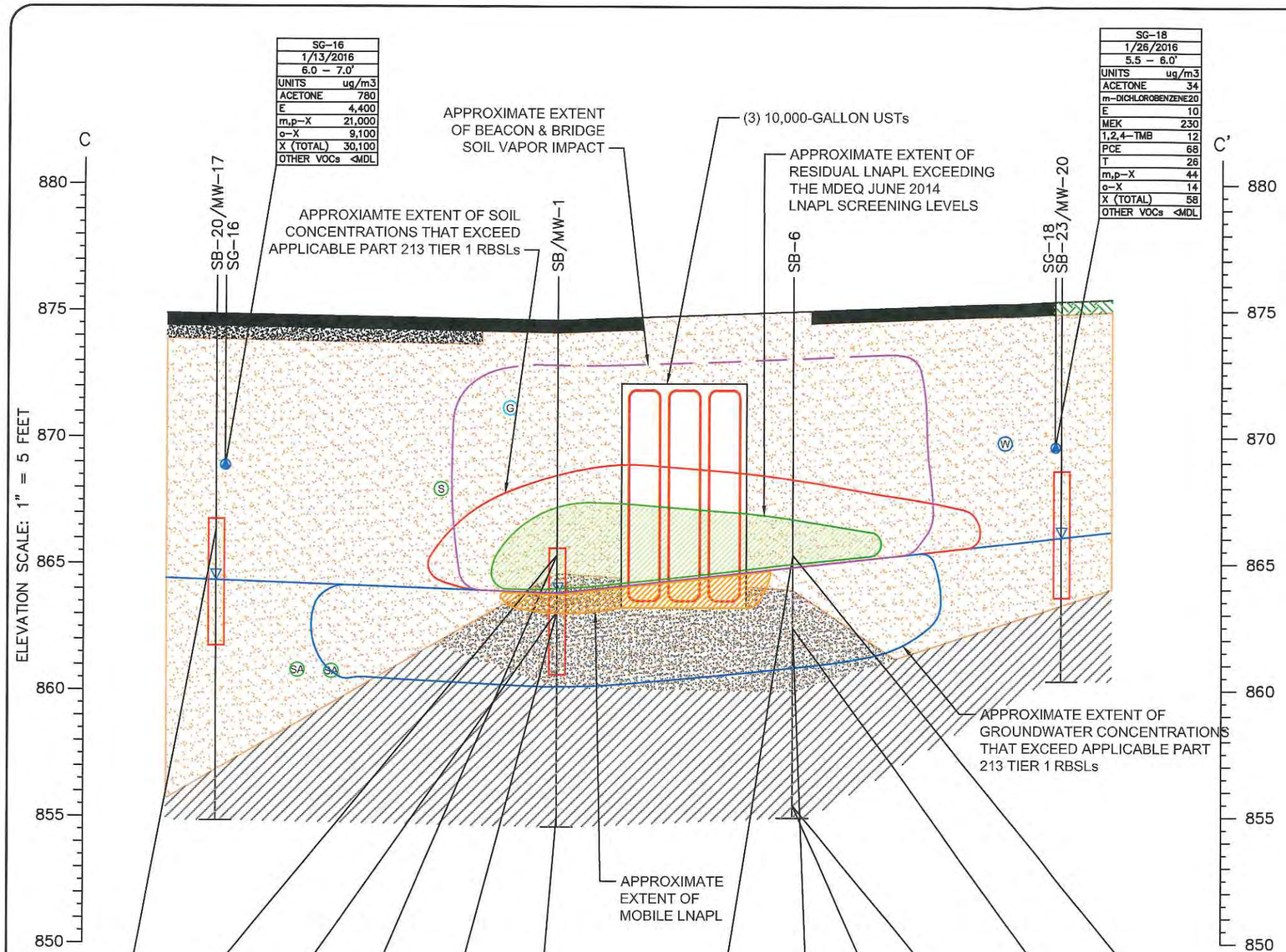


| SG-16 | |
|---|---|
| 1/13/2016 | |
| 6.0 – 7.0' | |
| UNITS | ug/m3 |
| ACETONE | 780 |
| E | 4,400 |
| m,p-X | 21,000 |
| o-X | 9,100 |
| X (TOTAL) | 30,100 |
| OTHER VOCs | <MDL |

| SG-18 | |
|---|---|
| 1/26/2016 | |
| 5.5 – 6.0' | |
| UNITS | ug/m3 |
| ACETONE | 34 |
| m-DICHLOROBENZENE | 20 |
| E | 10 |
| MEK | 230 |
| 1,2,4-TMB | 12 |
| PCE | 68 |
| T | 26 |
| m,p-X | 44 |
| o-X | 14 |
| X (TOTAL) | 58 |
| OTHER VOCs | <MDL |

| SB-20 | |
|---|---|
| 1/12/2016 | |
| 8.0 – 9.0' | |
| VOCs | <MDL |
| GRO | <MDL |
| PNAs | <MDL |

| SB-1 | |
|---|---|
| 12/18/2014 | |
| 9.0 – 10.0' | |
| B | 8,100 |
| T | 150,000 |
| E | 71,000 |
| X | 380,000 |
| ISOP | 9,200 |
| n-PROP | 31,000 |
| 1,2,3-TMB | 65,000 |
| 1,2,4-TMB | 230,000 |
| 1,3,5-TMB | 65,000 |
| NAPH | 35,000 |
| 2-M | 32,000 |
| OTHER VOCs | <MDL |
| GRO | 2,800,000 |

| SB-1 | |
|---|---|
| 12/18/2014 | |
| 11.0 – 12.0' | |
| B | 830 |
| T | 460 |
| E | 4,300 |
| X | 7,800 |
| ISOP | 290 |
| n-PROP | 720 |
| 1,2,3-TMB | 1,200 |
| 1,2,4-TMB | 4,400 |
| 1,3,5-TMB | 930 |
| NAPH | 1,100 |
| OTHER VOCs | <MDL |
| GRO | 37,000 |

| SB-1 | |
|---|---|
| 12/18/2014 | |
| 19.0 – 20.0' | |
| VOCs | <MDL |

| SB-1 (ECT) | |
|---|---|
| 12/18/2014 | |
| 11.0 – 12.0' | |
| B | 4,100 |
| T | 6,100 |
| E | 5,100 |
| X | 18,600 |
| ISOP | 370 |
| n-PROP | 1,400 |
| 1,2,4-TMB | 9,600 |
| 1,3,5-TMB | 2,700 |
| NAPH | 1,700 |
| OTHER VOCs | <MDL |

| SB-1 (ECT) | |
|---|---|
| 12/18/2014 | |
| 19.0 – 20.0' | |
| VOCs | <MDL |

| SB-1 (ECT) | |
|---|---|
| 12/18/2014 | |
| 9.0 – 10.0' | |
| B | 24,000 |
| T | 350,000 |
| E | 160,000 |
| X | 840,000 |
| ISOP | 17,000 |
| sec-BUTYLB | 8,200 |
| n-PROP | 69,000 |
| 1,2,4-TMB | 460,000 |
| 1,3,5-TMB | 130,000 |
| NAPH | 67,000 |
| 2-M | 74,000 |
| OTHER VOCs | <MDL |

| SB-6 | |
|---|---|
| 12/19/2014 | |
| 9.0 – 10.0' | |
| B | 2,300 |
| T | 25,000 |
| E | 18,000 |
| X | 100,000 |
| ISOP | 9,500 |
| n-PROP | 9,500 |
| 1,2,3-TMB | 19,000 |
| 1,2,4-TMB | 66,000 |
| 1,3,5-TMB | 19,000 |
| NAPH | 11,000 |
| 2-M | 10,000 |
| OTHER VOCs | <MDL |
| GRO | 590,000 |

| SB-6 | |
|---|---|
| 12/19/2014 | |
| 12.0 – 13.0' | |
| B | 22,000 |
| T | 63,000 |
| E | 48,000 |
| X | 240,000 |
| ISOP | 5,600 |
| n-PROP | 19,000 |
| 1,2,3-TMB | 37,000 |
| 1,2,4-TMB | 130,000 |
| 1,3,5-TMB | 37,000 |
| NAPH | 20,000 |
| 2-M | 18,000 |
| OTHER VOCs | <MDL |
| GRO | 2,100,000 |

| SB-6 | |
|---|---|
| 12/19/2014 | |
| 19.0 – 20.0' | |
| 1,2,4-TMB | 59 |
| OTHER VOCs | <MDL |

| SB-6 (ECT) | |
|---|---|
| 12/19/2014 | |
| 19.0 – 20.0' | |
| T | 110 |
| E | 110 |
| X | 500 |
| n-PROP | 60 |
| 1,2,4-TMB | 330 |
| 1,3,5-TMB | 110 |
| OTHER VOCs | <MDL |

| SB-6 (ECT) | |
|---|---|
| 12/19/2014 | |
| 12.0 – 13.0' | |
| B | 61,000 |
| T | 230,000 |
| E | 150,000 |
| X | 740,000 |
| ISOP | 15,000 |
| sec-BUTYLB | 6,900 |
| n-PROP | 63,000 |
| 1,2,4-TMB | 370,000 |
| 1,3,5-TMB | 110,000 |
| NAPH | 56,000 |
| 2-M | 59,000 |
| OTHER VOCs | <MDL |

| SB-6 (ECT) | |
|---|---|
| 12/19/2014 | |
| 9.0 – 10.0' | |
| B | 5,900 |
| T | 58,000 |
| E | 32,000 |
| X | 178,000 |
| ISOP | 3,600 |
| sec-BUTYLB | 1,800 |
| n-PROP | 16,000 |
| 1,2,4-TMB | 100,000 |
| 1,3,5-TMB | 29,000 |
| NAPH | 21,000 |
| 2-M | 20,000 |
| OTHER VOCs | <MDL |

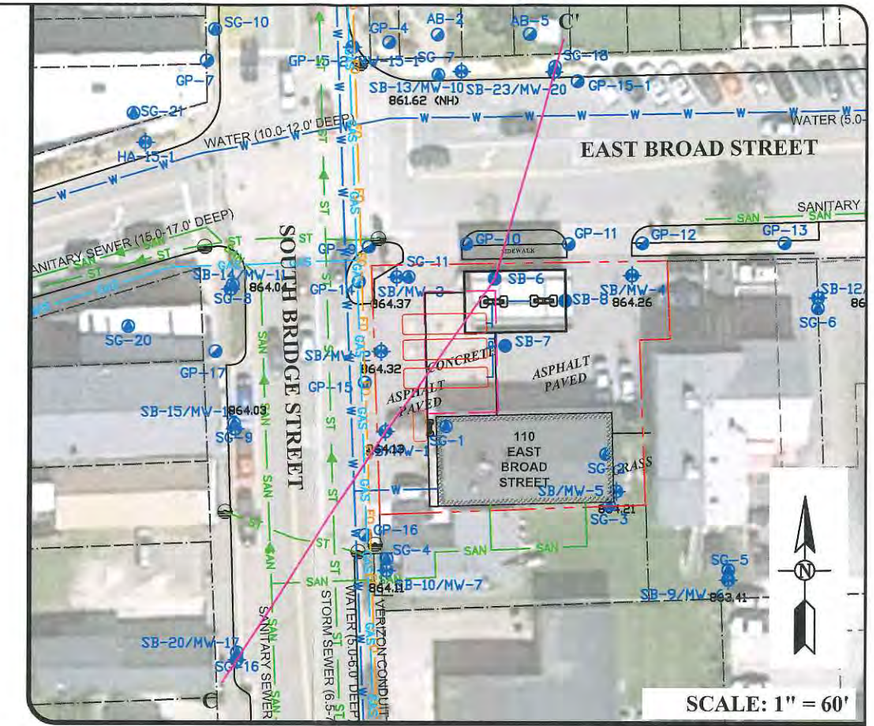


## LEGEND:

| | |
|---|---|
| FILL OR ASPHALT | |
| CONCRETE | |
| TOP SOIL | |
| SAND | |
| CLAY | |
| SAND AND GRAVEL | |
| WATER | |
| STORM SEWER | |
| SANITARY SEWER | |
| GAS LINE | |
| SCREEN | |
| GROUNDWATER ELEVATION (JANUARY 19, 2016) | |
| LNAPL | LIGHT NON-AQUEOUS PHASE LIQUIDS |
| RBSLs | RISK BASED SCREENING LEVELS |
| | SOIL GAS SAMPLE |

| | |
|---|---|
| B | BENZENE |
| T | TOLUENE |
| E | ETHYLBENZENE |
| X | XYLENES |
| 1,2,4-TMB | 1,2,4-TRIMETHYLBENZENE |
| 1,3,5-TMB | 1,3,5-TRIMETHYLBENZENE |
| 1,2,3-TMB | 1,2,3-TRIMETHYLBENZENE |
| ISOP | ISOPROPYLBENZENE |
| n-PROP | n-PROPYLBENZENE |
| sec-BUTYLB | sec-BUTYLBENZENE |
| PCE | TETRACHLOROETHENE |
| MEK | 2-BUTANONE (MEK) |
| 2-M | 2-METHYLNAPHTHALENE |
| NAPH | NAPHTHALENE |
| GRO | GASOLINE RANGE ORGANICS |
| VOCs | VOLATILE ORGANIC COMPOUNDS |
| PNAs | POLYNUCLEAR AROMATIC COMPOUNDS |
| GVOCs | GASOLINE RANGE VOLATILE ORGANIC COMPOUNDS |
| MDL | METHOD DETECTION LIMIT |
| UNITs | µg/Kg (UNLESS NOTED) |
| | VALUE EXCEEDS APPLICABLE CRITERIA |
| NOTES: | REFER TO TABLES FOR SPECIFIC COMPOUNDS ANALYZED |

5'
0
0 SCALE 40'

PM ENVIRONMENTAL | Environmental & Engineering Services

# FIGURE 10A

CONCEPTUAL CROSS SECTION C-C' WITH SOIL AND SOIL GAS ANALYTICAL RESULTS

PROJ:

BEACON & BRIDGE #8
110 EAST BROAD STREET
LINDEN, MI

THIS IS NOT A LEGAL SURVEY

VERIFY SCALE
0 NOTED
IF NOT 1" ON THIS SHEET, ADJUST SCALES ACCORDINGLY.

DRN BY: ES/KS/ES
DATE: 2/10/2016
CHKD BY: CS
SCALE: NOTED
FILE NAME: 01-4982-0-002F00R03

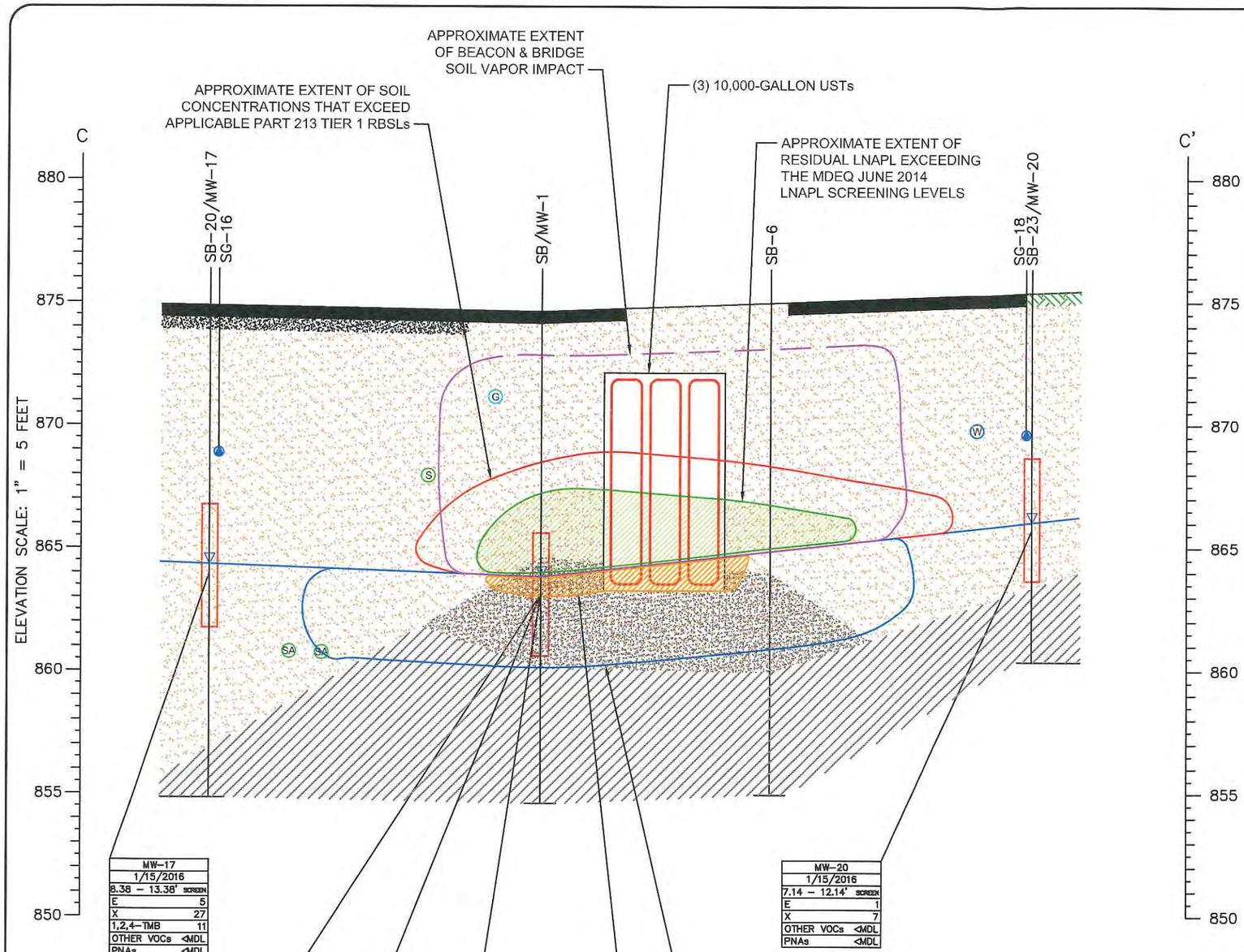


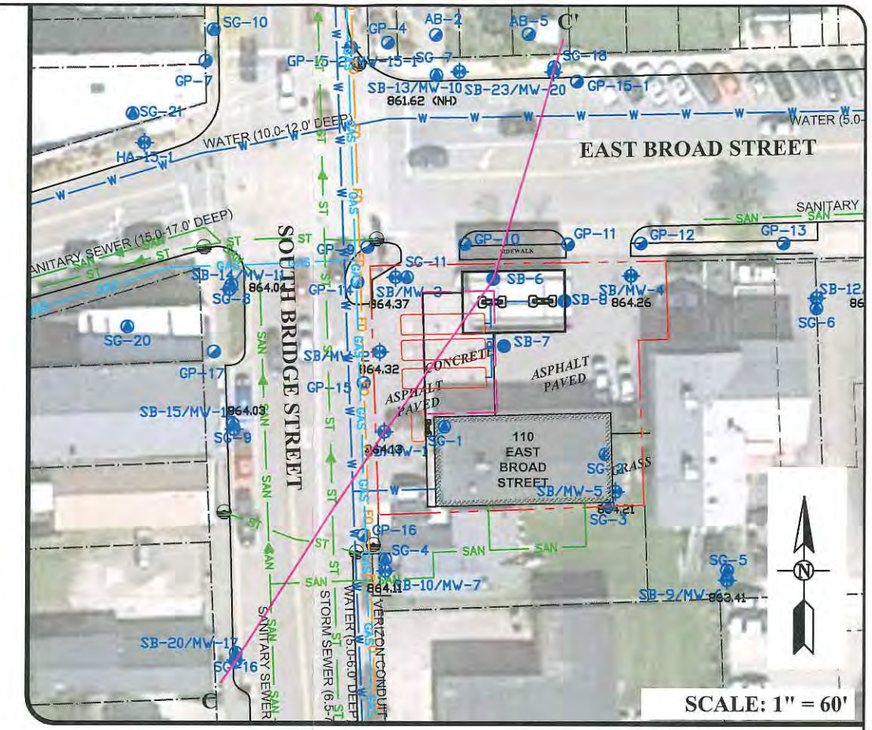


## LEGEND:

| | |
|---|---|
| | FILL OR ASPHALT |
| | CONCRETE |
| | TOP SOIL |
| | SAND |
| | CLAY |
| | SAND AND GRAVEL |
| W | WATER |
| S | STORM SEWER |
| G | GAS LINE |
| SA | SANITARY SEWER |
| | SCREEN |
| | GROUNDWATER ELEVATION (JANUARY 19, 2016) |
| LNAPL | LIGHT NON-AQUEOUS PHASE LIQUIDS |
| RBSLs | RISK BASED SCREENING LEVELS |
| | SOIL GAS SAMPLE |

| | |
|---|---|
| B | BENZENE |
| T | TOLUENE |
| E | ETHYLBENZENE |
| X | XYLENES |
| 1,2,4-TMB | 1,2,4-TRIMETHYLBENZENE |
| 1,3,5-TMB | 1,3,5-TRIMETHYLBENZENE |
| 1,2,3-TMB | 1,2,3-TRIMETHYLBENZENE |
| ISOP | ISOPROPYLBENZENE |
| n-PROP | n-PROPYLBENZENE |
| 2-M | 2-METHYLNAPHTHALENE |
| NAPH | NAPHTHALENE |
| VOCs | VOLATILE ORGANIC COMPOUNDS |
| PNAs | POLYNUCLEAR AROMATIC COMPOUNDS |
| MDL | METHOD DETECTION LIMIT |
| UNITs | µg/L (UNLESS NOTED) |
| | VALUE EXCEEDS APPLICABLE CRITERIA |
| NOTES: | REFER TO TABLES FOR SPECIFIC COMPOUNDS ANALYZED |

5'
0
0
40'
SCALE

PM ENVIRONMENTAL | Environmental & Engineering Services

# FIGURE 10B

CONCEPTUAL CROSS SECTION C-C' WITH GROUNDWATER ANALYTICAL RESULTS

PROJ:
BEACON & BRIDGE #8
110 EAST BROAD STREET
LINDEN, MI

THIS IS NOT A LEGAL SURVEY

VERIFY SCALE
0 NOTED
IF NOT 1" ON THIS SHEET, ADJUST SCALES ACCORDINGLY.

DRN. BY: ES/KS/ES
DATE: 2/10/2016
CHKD BY: CS
SCALE: NOTED
FILE NAME: 01-4982-0-002F00R03

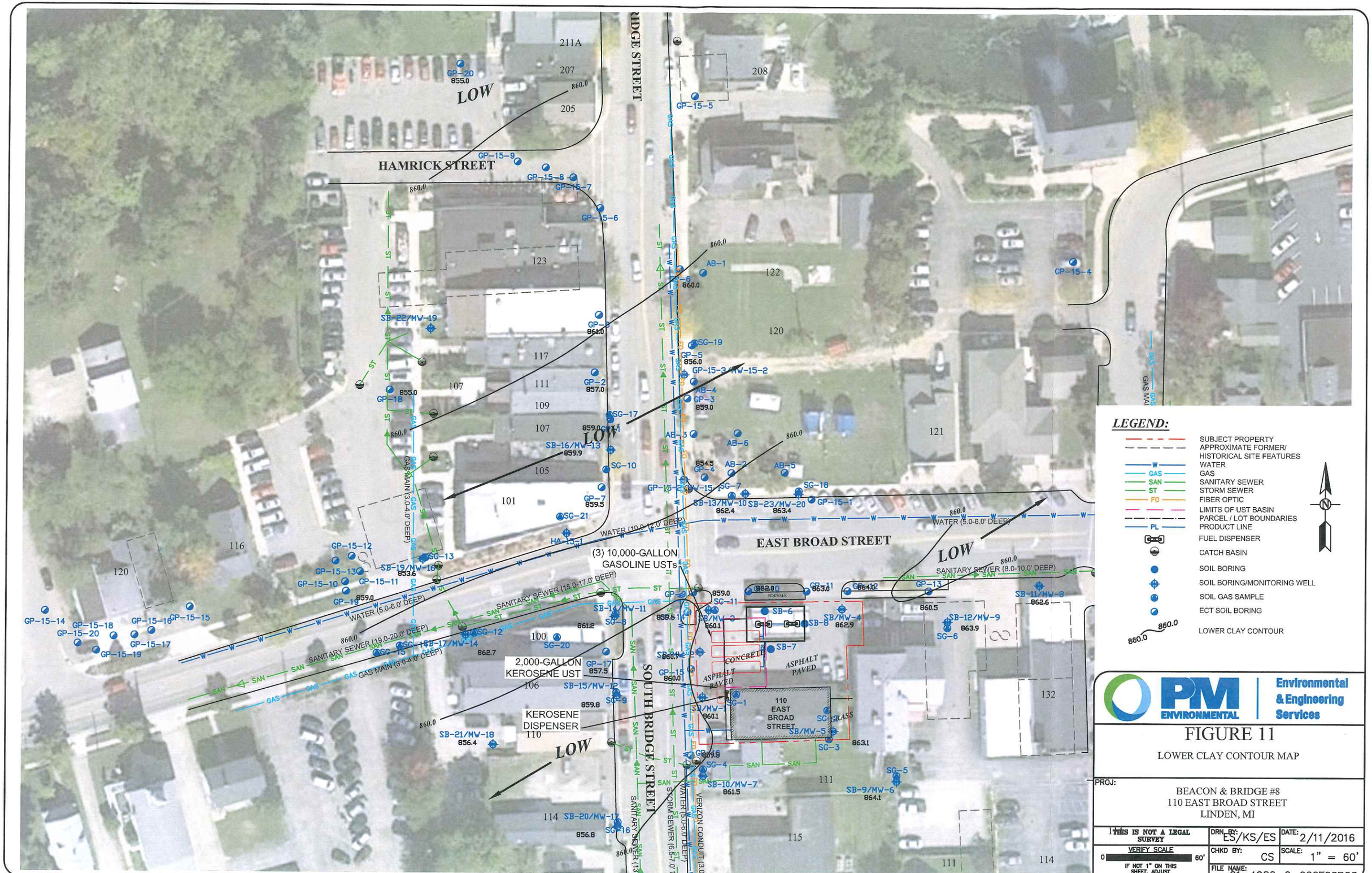


## LEGEND:

- SUBJECT PROPERTY
- APPROXIMATE FORMER/ HISTORICAL SITE FEATURES
- W — WATER
- GAS — GAS
- SAN — SANITARY SEWER
- ST — STORM SEWER
- FO — FIBER OPTIC
- LIMITS OF UST BASIN
- PARCEL / LOT BOUNDARIES
- PL — PRODUCT LINE
- FUEL DISPENSER
- CATCH BASIN
- SOIL BORING
- SOIL BORING/MONITORING WELL
- SOIL GAS SAMPLE
- ECT SOIL BORING
- 860.0 — LOWER CLAY CONTOUR

PM ENVIRONMENTAL | Environmental & Engineering Services

# FIGURE 11

LOWER CLAY CONTOUR MAP

PROJ:

BEACON & BRIDGE #8
110 EAST BROAD STREET
LINDEN, MI

| | | |
|---|---|---|
| THIS IS NOT A LEGAL SURVEY | DRN BY: ES/KS/ES | DATE: 2/11/2016 |
| VERIFY SCALE 0 — 60' IF NOT 1" ON THIS SHEET, ADJUST SCALES ACCORDINGLY. | CHKD BY: CS | SCALE: 1" = 60' |
| | FILE NAME: 01-4982-0-002F00R03 | |

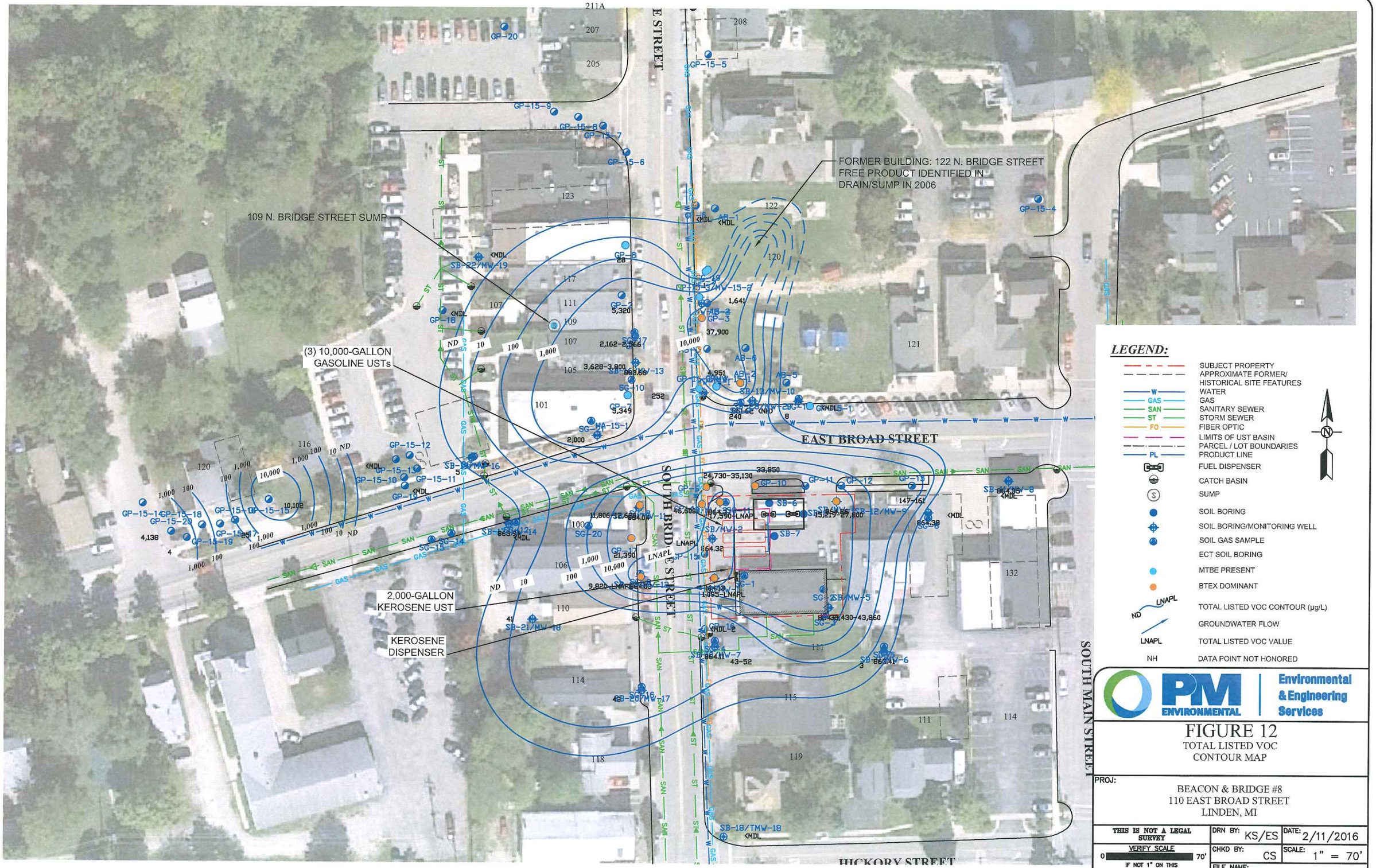


PM ENVIRONMENTAL | Environmental & Engineering Services

# FIGURE 12
TOTAL LISTED VOC
CONTOUR MAP

PROJ:
BEACON & BRIDGE #8
110 EAST BROAD STREET
LINDEN, MI

| | | |
|---|---|---|
| THIS IS NOT A LEGAL SURVEY | DRN BY: KS/ES | DATE: 2/11/2016 |
| VERIFY SCALE 0 70' IF NOT 1" ON THIS SHEET, ADJUST SCALES ACCORDINGLY. | CHKD BY: CS | SCALE: 1" = 70' |
| | FILE NAME: 01-4982-0-002F00R03 | |

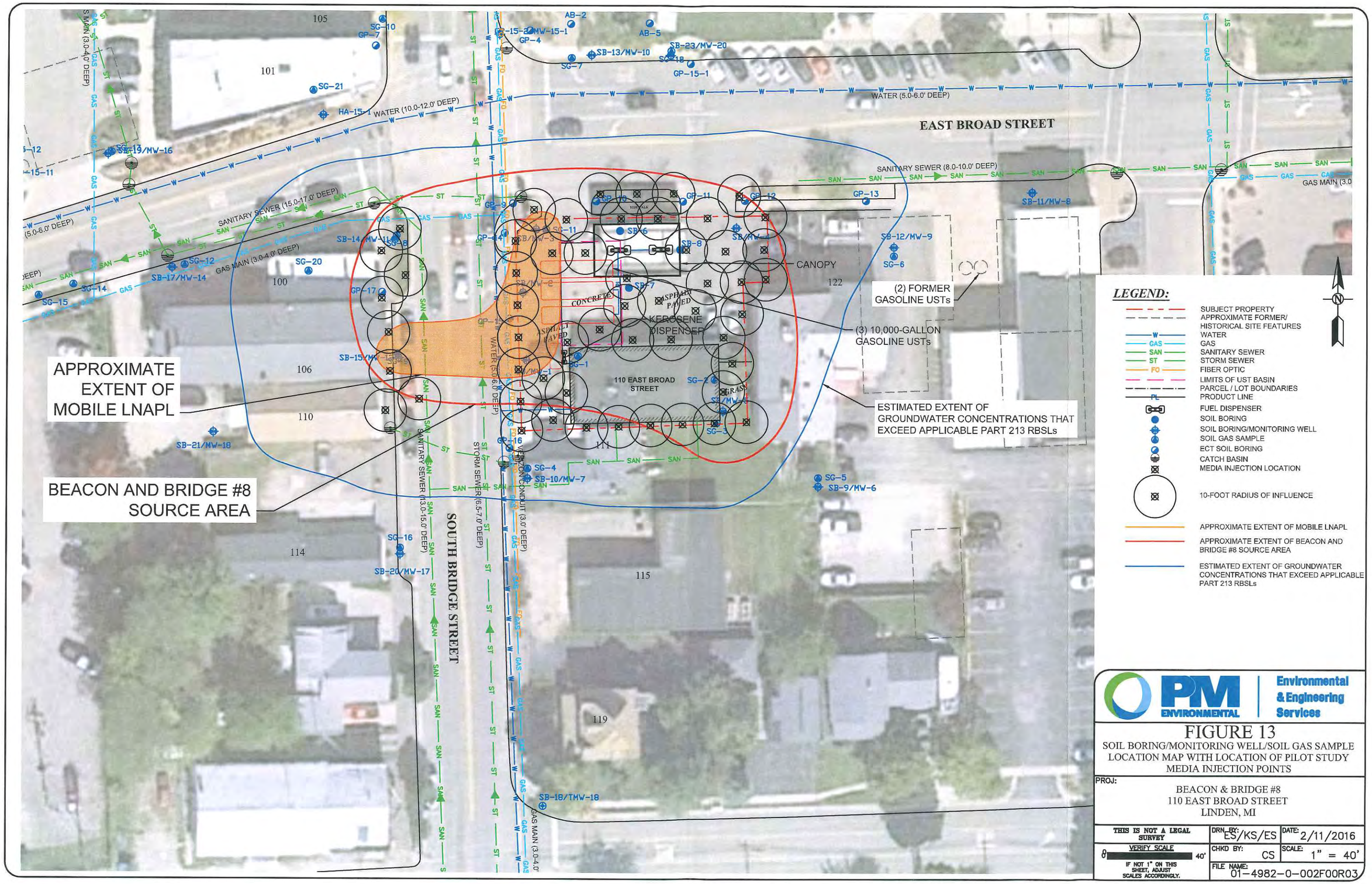


PM ENVIRONMENTAL | Environmental & Engineering Services

# FIGURE 13

SOIL BORING/MONITORING WELL/SOIL GAS SAMPLE LOCATION MAP WITH LOCATION OF PILOT STUDY MEDIA INJECTION POINTS

PROJ:

BEACON & BRIDGE #8
110 EAST BROAD STREET
LINDEN, MI

| | | |
|---|---|---|
| THIS IS NOT A LEGAL SURVEY | DRN BY: ES/KS/ES | DATE: 2/11/2016 |
| VERIFY SCALE 0 40' IF NOT 1" ON THIS SHEET, ADJUST SCALES ACCORDINGLY. | CHKD BY: CS | SCALE: 1" = 40' |
| | FILE NAME: 01-4982-0-002F00R03 | |

# Appendix A

PM ENVIRONMENTAL | Environmental & Engineering Services

# Well Log .

**Project No.:** 01-4982-0-002
**Well No.:** SB-9/MW-6
**Project Name:** Beacon and Bridge #8
**Date Drilled:** 9/17/2015
**Facility ID#:**
**Drill Rig:** HA
**Logged By:** SS
**Sampling Method:** 2 1/4" Stainless Bucket

PM ENVIRONMENTAL

| SUBSURFACE PROFILE | | | SAMPLE | | | |
|---|---|---|---|---|---|---|
| Depth (ft.) | Boring Profile | Description and Comments | Sample # Depth | Blow Counts | PID (ppm) | Groundwater Well Completion Details |
| | | Ground Surface | | | | |
| 0 | | ***GRASS/TOP SOIL*** | | - | 0.1 | |
| | | ***SP- (Medium Loose) SAND (moist)*** Brown, fine | | - | 0.0 | |
| 2 | | | | - | 0.0 | |
| | | | | - | 0.1 | |
| 4 | | ***SP- (Loose) SAND (moist)*** Brown/Gray | | - | 0.0 | |
| | | | | - | 0.1 | |
| 6 | | | | - | 0.2 | |
| | | | SS-1 7.0 - 8.0' | - | 0.2 | |
| 8 | | | | - | 0.1 | |
| | | | | - | 0.0 | |
| 10 | | ***SW- (Loose) SAND (moist)*** Coarse, with gravel | | - | 0.1 | |
| | | ***CL- (Stiff) CLAY (moist)*** Little fine sand, trace gravel | | - | 0.1 | |
| 12 | | | | - | 0.0 | |
| | | | | - | 0.1 | |
| 14 | | | | - | 0.0 | |
| 16 | | | | | | |

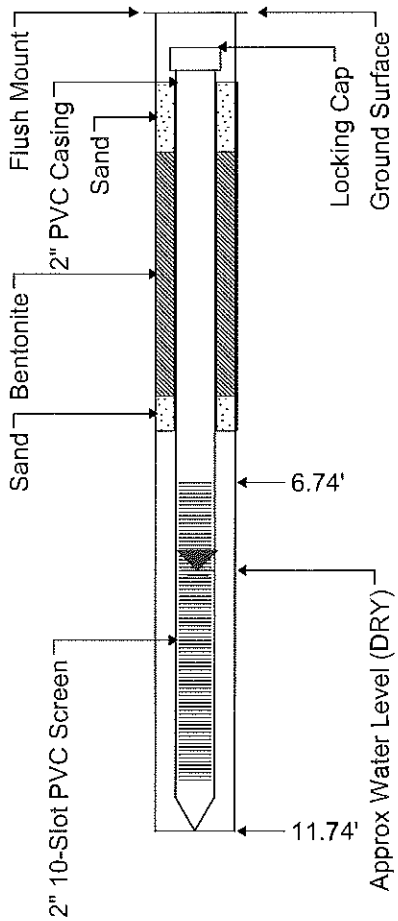


***Completion Notes:*** EOB @ 15' bgs.

1. The indicated stratification lines are approximate in situ. The transitions between materials may be gradual.
2. Boring backfilled with natural soils unless otherwise noted

# Well Log .

**Project No.:** 01-4982-0-002
**Well No.:** SB-10/MW-7
**Project Name:** Beacon and Bridge #8
**Date Drilled:** 9/16/2015
**Facility ID#:**
**Drill Rig:** HA/6610
**Logged By:** SS
**Sampling Method:** 2 1/8" MC, 3 1/4" Bucket

PM ENVIRONMENTAL

## SUBSURFACE PROFILE

Ground Surface

**LANDSCAPING**

***SP- (Loose) SAND (moist)***
Brown, fine, with trace clay and gravel

***SC- (Medium) CLAYEY SAND (moist)***
Brown, fine

***SW- (Loose) SAND (moist)***
Brown, fine, trace gravel

***GP- (Medium) SAND (saturated)***
Coarse, with gravel

***CL- (Stiff) CLAY (moist)***
Gray, some fine sand, trace gravel

## SAMPLE

| Sample # Depth | Blow Counts | PID (ppm) |
|---|---|---|
| | - | 0.1 |
| | - | 0.0 |
| SS-1 2.0 - 3.0' | - | 0.2 |
| | - | 0.1 |
| | - | 0.1 |
| | - | 0.1 |
| | - | 0.1 |
| | - | 0.2 |
| | - | 0.1 |
| SS-2 9.0 - 10.0' | - | 0.1 |
| | - | 0.0 |
| | - | 0.0 |
| | - | 0.1 |
| | - | 0.1 |
| | - | 0.1 |
| | - | 0.0 |
| | - | 0.0 |
| | - | 0.0 |
| | - | 0.0 |
| | - | 0.1 |

## Groundwater Well Completion Details

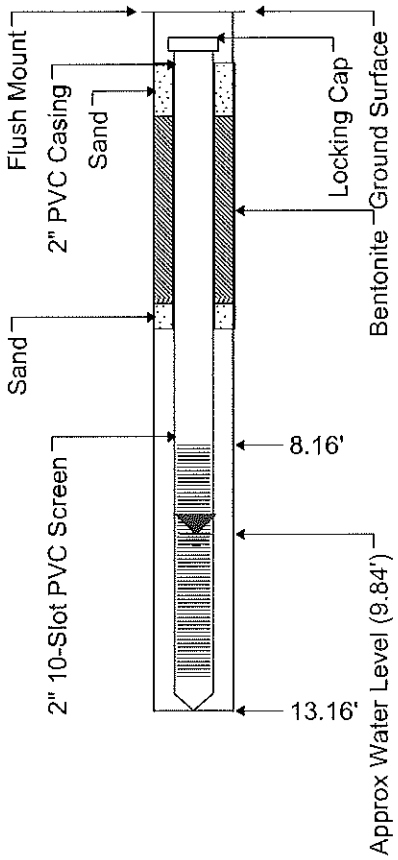


***Completion Notes:*** EOB @ 20' bgs.

1. The indicated stratification lines are approximate in situ. The transitions between materials may be gradual.
2. Boring backfilled with natural soils unless otherwise noted

# Well Log .

**Project No.:** 01-4982-0-002
**Well No.:** SB-11/MW-8
**Project Name:** Beacon and Bridge #8
**Date Drilled:** 9/16/2015
**Facility ID#:**
**Drill Rig:** HA/6610
**Logged By:** SS
**Sampling Method:** 2 1/8" MC, 3 1/4" Bucket

PM ENVIRONMENTAL

## SUBSURFACE PROFILE / SAMPLE

| Depth (ft.) | Description and Comments | Sample # Depth | Blow Counts | PID (ppm) |
|---|---|---|---|---|
| 0 | Ground Surface | | | |
| | *ASPHALT* | | - | 0.0 |
| | *GRAVEL* | | - | 0.0 |
| 2 | *SP- (Loose) SAND (moist)* Light Brown, fine, some clay seams | | - | 0.0 |
| | | | - | 0.1 |
| 4 | | | - | 0.0 |
| | | | - | 0.3 |
| 6 | | | - | 0.3 |
| | | SS-1 7.0 - 8.0' | - | 0.0 |
| 8 | | | - | 0.1 |
| | *SW- (Loose) SAND (moist)* Brown, coarse, with gravel | | - | 0.0 |
| 10 | | | - | 0.0 |
| | | | - | 0.0 |
| 12 | *SW- (Loose) SAND (saturated)* Coarse, with gravel | | - | 0.0 |
| | *CL- (Stiff) CLAY (moist)* Gray, some fine sand | | - | 0.2 |
| 14 | | | - | 0.1 |
| | | | - | 0.1 |
| 16 | | | - | 0.0 |
| | | | - | 0.0 |
| 18 | | | - | 0.0 |
| | | | - | 0.0 |
| 20 | | | | |

## Groundwater Well Completion Details

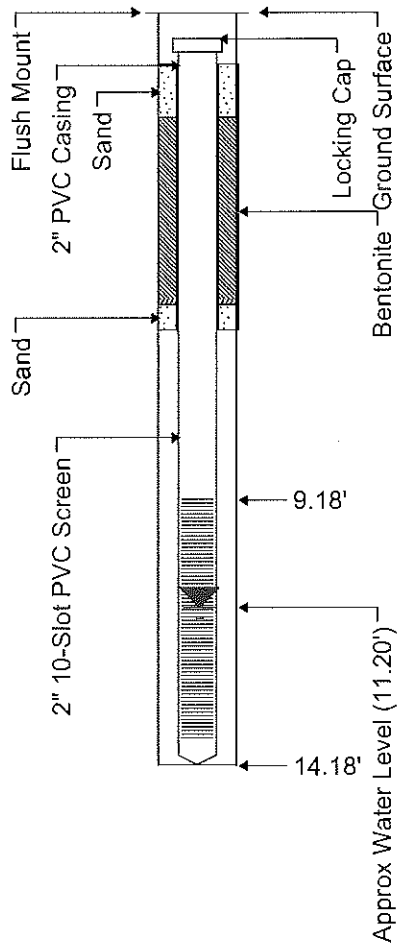


**Completion Notes:** EOB @ 20' bgs.

1. The indicated stratification lines are approximate in situ. The transitions between materials may be gradual.
2. Boring backfilled with natural soils unless otherwise noted

# Well Log .

**Project No.:** 01-4982-0-002
**Well No.:** SB-12/MW-9
**Project Name:** Beacon and Bridge #8
**Date Drilled:** 9/17/2015
**Facility ID#:**
**Drill Rig:** 6610
**Logged By:** SS
**Sampling Method:** 2 1/8" MC

PM ENVIRONMENTAL

| Depth (ft.) | Boring Profile | Description and Comments | Sample # Depth | Blow Counts | PID (ppm) |
|---|---|---|---|---|---|
| | | Ground Surface | | | |
| 0 | | *ASPHALT* | | - | 0.1 |
| | | *GRAVEL* | | - | 0.1 |
| 2 | | *SW- (Loose) SAND (moist)* Brown, fine, with some gravel | | - | 0.0 |
| | | *SP- (Medium) SAND (moist)* Light Brown, fine | | - | 0.0 |
| 4 | | | | - | 0.0 |
| | | | | - | 0.3 |
| 6 | | | | - | 0.0 |
| | | | SS-1 7.0 - 8.0' | - | 0.2 |
| 8 | | *SP- (Medium) SAND (moist)* Brown, fine | | - | 0.1 |
| | | | | - | 0.3 |
| 10 | | *SP- (Medium) SAND (saturated)* Coarse, with trace gravel | | - | 0.1 |
| | | | | - | 0.0 |
| 12 | | *CL- (Medium Stiff) CLAY (moist)* Gray, with some sand, trace gravel | | - | 0.0 |
| | | | | - | 0.1 |
| 14 | | | | - | 0.0 |
| | | | | - | 0.0 |
| 16 | | | | - | 0.0 |
| | | | | - | 0.0 |
| 18 | | | | - | 0.1 |
| | | | | - | 0.1 |
| 20 | | | | | |

Groundwater Well Completion Details

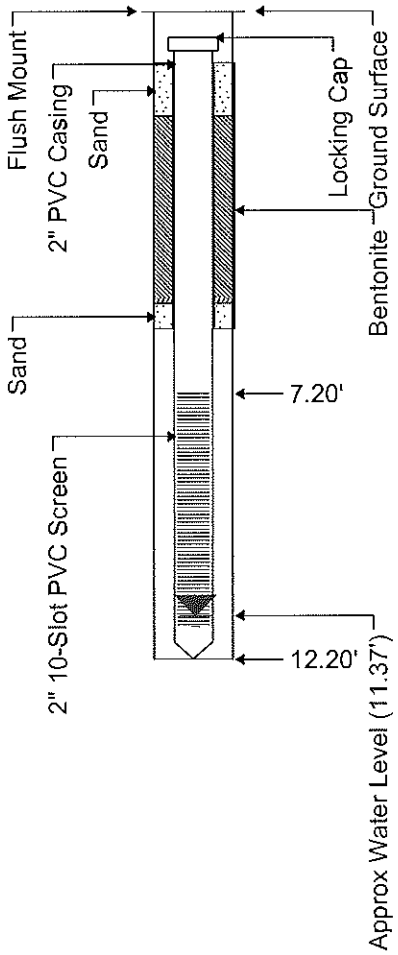


**Completion Notes:** EOB @ 20' bgs.

1. The indicated stratification lines are approximate in situ. The transitions between materials may be gradual.
2. Boring backfilled with natural soils unless otherwise noted

**Sheet:** 1 of 1

# Well Log .

**Project No.:** 01-4982-0-002
**Project Name:** Beacon and Bridge #8
**Facility ID#:**
**Logged By:** SS

**Well No.:** SB-13/MW-10
**Date Drilled:** 9/15/2015
**Drill Rig:** 6610
**Sampling Method:** 2 1/8" MC 3 1/4" Bucket

| Depth (ft.) | Boring Profile | Description and Comments | Sample # Depth | Blow Counts | PID (ppm) |
|---|---|---|---|---|---|
| | | Ground Surface | | | |
| 0 | | *GRASS/TOP SOIL* | | - | 0.0 |
| | | *SP- (Loose) SAND (moist)* Light Brown, trace gravel | | - | 0.1 |
| 2 | | | | - | 0.1 |
| | | | | - | 0.0 |
| 4 | | | | - | 0.0 |
| | | | | - | 0.0 |
| 6 | | | | - | 3.6 |
| | | | | - | 4.7 |
| 8 | | *SW- (Loose) SAND (moist)* Brown, with little gravel | | - | 77 |
| | | | | - | 1311 |
| 10 | | | | - | 397 |
| | | | | - | 119 |
| 12 | | *CL- (Medium) CLAY (moist)* Gray, some fine sand, trace gravel | | - | 99 |
| | | | | - | 56 |
| 14 | | | | - | 10 |
| | | *SC- (Soft) CLAYEY SAND (saturated)* Some gravel, intermittent seams of sand | SS-1 15.0 - 16.0' | - | 1860 |
| 16 | | | | - | 1610 |
| | | *CL- (Stiff) CLAY (moist)* Gray, with little sand | | - | 1269 |
| 18 | | | | - | 497 |
| | | | SS-2 19.0 - 20.0' | - | 500 |
| 20 | | | | | |

Groundwater Well Completion Details

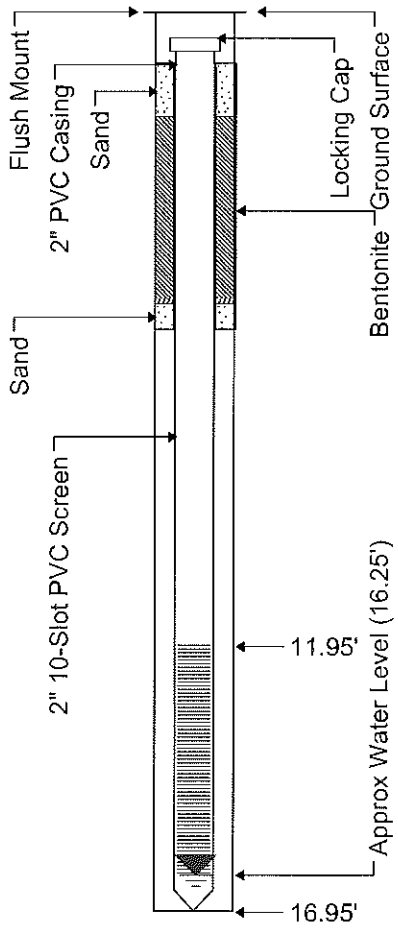


**Completion Notes:** EOB @ 20' bgs.

1. The indicated stratification lines are approximate in situ. The transitions between materials may be gradual.
2. Boring backfilled with natural soils unless otherwise noted

**Sheet:** 1 of 1

# Well Log .

**Project No.:** 01-4982-0-002
**Well No.:** SB-14/MW-11
**Project Name:** Beacon and Bridge #8
**Date Drilled:** 9/14/2015
**Facility ID#:**
**Drill Rig:** 6610
**Logged By:** SS
**Sampling Method:** 2 1/8" MC

PM ENVIRONMENTAL

| SUBSURFACE PROFILE | | | SAMPLE | | | Groundwater Well Completion Details |
|---|---|---|---|---|---|---|
| Depth (ft.) | Boring Profile | Description and Comments | Sample # Depth | Blow Counts | PID (ppm) | |
| | | Ground Surface | | | | |
| 0 | | *GRASS/TOP SOIL* | | - | 0.0 | |
| | | *SP- (Medium Loose) SAND (moist)* Brown, fine | | - | 0.0 | |
| 2 | | | | - | 0.0 | |
| | | | | - | 0.0 | |
| 4 | | | | - | 0.0 | |
| | | | | - | 0.0 | |
| 6 | | | | - | 21 | |
| | | | SS-1 7.0 - 8.0' | - | 460 | |
| 8 | | *SP- (Loose) SAND (moist)* Gray, fine, some coarse sand | | - | 2760 | |
| | | | SS-2 9.0 - 10.0' | - | 3691 | |
| 10 | | *SP- (Loose) SAND (saturated)* Gray, fine, some coarse sand | | - | 3162 | |
| | | | | - | 1001 | |
| 12 | | | | - | 221 | |
| | | *CL- (Stiff) CLAY (moist)* Gray, with some sand | | - | 7.1 | |
| 14 | | | SS-3 14.0 - 15.0' | - | 6.3 | |
| 16 | | | | | | |

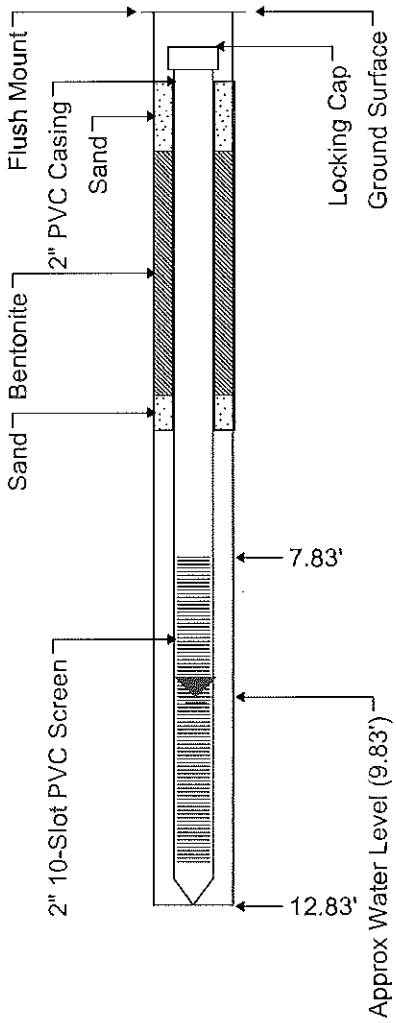


**Completion Notes:** EOB @ 15' bgs.

1. The indicated stratification lines are approximate in situ. The transitions between materials may be gradual.
2. Boring backfilled with natural soils unless otherwise noted

# Well Log .

**Project No.:** 01-4982-0-002
**Project Name:** Beacon and Bridge #8
**Facility ID#:**
**Logged By:** SS

**Well No.:** SB-15/MW-12
**Date Drilled:** 9/14/2015
**Drill Rig:** 6610
**Sampling Method:** 2 1/8" MC 3 1/4" HA

ENVIRONMENTAL

## SUBSURFACE PROFILE / SAMPLE

| Depth (ft.) | Description and Comments | Sample # Depth | Blow Counts | PID (ppm) |
|---|---|---|---|---|
| 0 | Ground Surface | | | |
| | *ASPHALT* | | - | 223 |
| | *GRAVEL* | | - | 211 |
| 2 | *SP- (Loose) SAND (moist)* Light Brown, fine, trace gravel | SS-1 2.0 - 3.0' | - | 289 |
| 4 | | | - | 78 |
| | | | - | 75 |
| | | | - | 93 |
| 6 | | | - | 110 |
| | | | - | 389 |
| 8 | | SS-2 8.0 - 9.0' | - | 1216 |
| | *SP- (Loose) SAND (moist)* Brown/Gray, fine, with gravel | | - | 2416 |
| 10 | *SW- (Loose) SAND (saturated)* Brown/Gray, fine | | - | 1700 |
| | | | - | 364 |
| 12 | | | - | 350 |
| | | | - | 73 |
| 14 | *CL- (Medium Stiff) CLAY (moist)* Gray, some fine sand, trace gravel | | - | 22 |
| | | | - | 7.6 |
| 16 | | | - | 0.0 |
| | | | - | 0.1 |
| 18 | | | - | 2.1 |
| | | SS-3 19.0 - 20.0' | - | 0.8 |
| 20 | | | | |

Groundwater Well Completion Details

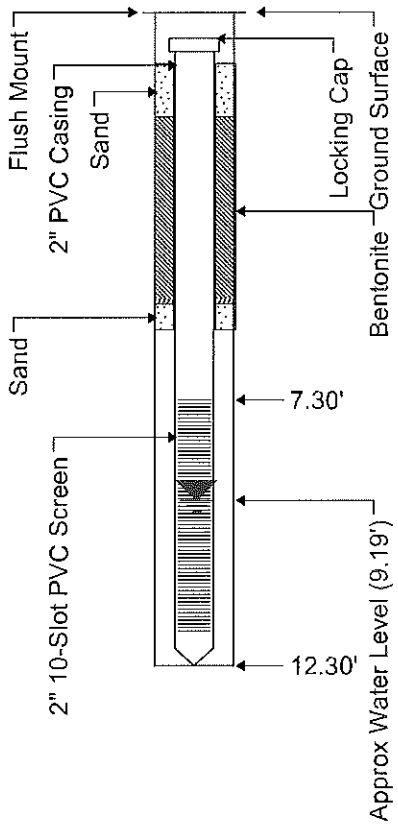


**Completion Notes:** EOB @ 20' bgs.

1. The indicated stratification lines are approximate in situ. The transitions between materials may be gradual.
2. Boring backfilled with natural soils unless otherwise noted

**Sheet:** 1 of 1

# Well Log .

**Project No.:** 01-4982-0-002
**Project Name:** Beacon and Bridge #8
**Facility ID#:**
**Logged By:** SS

**Well No.:** SB-16/MW-13
**Date Drilled:** 9/14/2015
**Drill Rig:** 6610/HA
**Sampling Method:** 2 1/8" MC 3 1/8" Bucket

| SUBSURFACE PROFILE | | | SAMPLE | | | |
|---|---|---|---|---|---|---|
| Depth (ft.) | Boring Profile | Description and Comments | Sample # Depth | Blow Counts | PID (ppm) | Groundwater Well Completion Details |
| | | Ground Surface | | | | |
| 0 | | ***BRICK*** | | | | |
| | | ***SP- (Loose) SAND (moist)*** Brown, fine, trace sand and gravel | | - | 0.0 | |
| | | | | - | 0.2 | |
| 2 | | | | - | 0.1 | |
| | | | | - | 0.2 | |
| 4 | | | | - | 0.1 | |
| | | | | - | 1.6 | |
| 6 | | ***SP- (Loose) SAND (moist)*** Gray, fine, with some discoloration | SS-1 6.0 - 7.0' | - | 2.7 | |
| | | | | - | 1.8 | |
| 8 | | | | - | 0.0 | |
| | | ***SW- (Loose) SAND (saturated)*** Brown, coarse | | - | 0.3 | |
| 10 | | | | - | 0.3 | |
| | | | | - | 0.0 | |
| 12 | | ***CL- (Medium) CLAY (moist)*** Gray, trace sand and gravel | SS-2 12.0 - 13.0' | - | 0.0 | |
| | | | | - | 0.3 | |
| 14 | | | | - | 0.1 | |
| 16 | | | | | | |

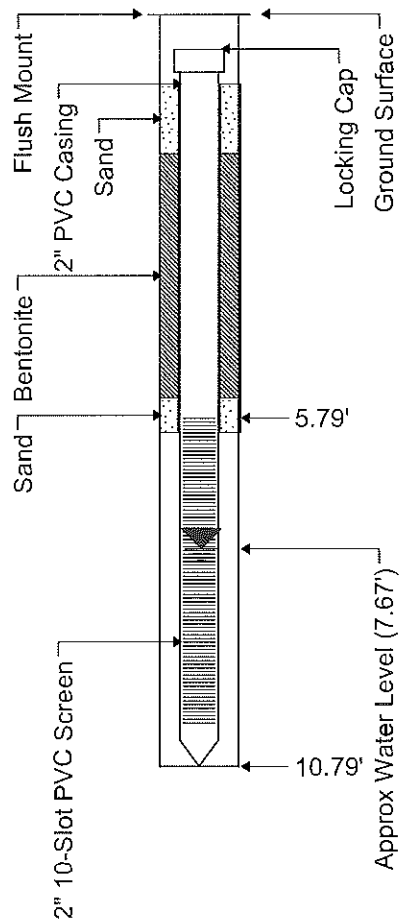


**Completion Notes:** EOB @ 15' bgs.

1. The indicated stratification lines are approximate in situ. The transitions between materials may be gradual.
2. Boring backfilled with natural soils unless otherwise noted

**Sheet:** 1 of 1

# Well Log .

**Project No.:** 01-4982-0-002
**Project Name:** Beacon and Bridge #8
**Facility ID#:**
**Logged By:** SS

**Well No.:** SB-17/MW-14
**Date Drilled:** 9/14/2015
**Drill Rig:** 6610/HA
**Sampling Method:** 2 1/8" MC 3 1/8" Bucket

| SUBSURFACE PROFILE | | | SAMPLE | | | |
|---|---|---|---|---|---|---|
| Depth (ft.) | Boring Profile | Description and Comments | Sample # Depth | Blow Counts | PID (ppm) | Groundwater Well Completion Details |
| | | Ground Surface | | | | |
| 0 | | *TOP SOIL/LANDSCAPE BRICK* | | - | 0.0 | |
| | | ***SP- (Loose) SAND (moist)*** Light Brown, fine, trace gravel | | - | 0.0 | |
| 2 | | | | - | 0.0 | |
| | | | | - | 0.3 | |
| 4 | | | | - | 0.1 | |
| | | | | - | 0.0 | |
| 6 | | | SS-1 6.0 - 7.0' | - | 0.7 | |
| | | | | - | 0.7 | |
| 8 | | | | - | 0.1 | |
| | | ***SP- (Loose) SAND (saturated)*** Brown | | - | 0.1 | |
| 10 | | ***CL- (Stiff) CLAY (moist)*** Gray, some fine sand | | - | 0.3 | |
| | | | | - | 0.0 | |
| 12 | | | | - | 0.0 | |
| | | | | - | 0.0 | |
| 14 | | | | - | 0.1 | |
| 16 | | | | | | |

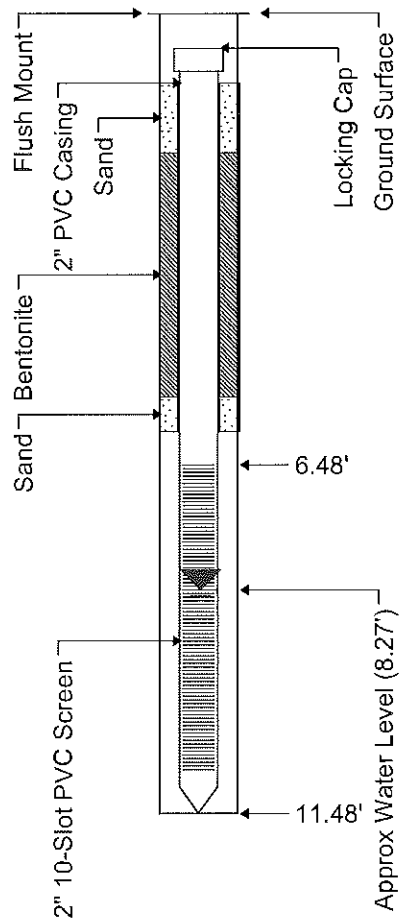


***Completion Notes:*** EOB @ 15' bgs.

1. The indicated stratification lines are approximate in situ. The transitions between materials may be gradual.
2. Boring backfilled with natural soils unless otherwise noted

# Well Log .

**Project No.:** 01-4982-0-002
**Project Name:** Beacon and Bridge #8
**Facility ID#:**
**Logged By:** SS

**Well No.:** SB-18/TMW-18
**Date Drilled:** 9/16/2015
**Drill Rig:** HA/6610
**Sampling Method:** 2 1/8" MC

PM ENVIRONMENTAL

| SUBSURFACE PROFILE | | | SAMPLE | | | |
|---|---|---|---|---|---|---|
| Depth (ft.) | Boring Profile | Description and Comments | Sample # Depth | Blow Counts | PID (ppm) | Groundwater Well Completion Details |
| 0 | | Ground Surface | | | | |
| | | *GRASS/TOP SOIL* | | - | 0.1 | |
| | | *SP- (Loose) SAND (moist)* Brown, fine | | - | 0.2 | |
| 2 | | | | - | 0.0 | |
| | | | | - | 0.1 | |
| 4 | | | | - | 0.2 | |
| | | | | - | 0.1 | |
| 6 | | | | - | 0.0 | |
| | | | SS-1 7.0 - 8.0' | - | 0.0 | |
| 8 | | | | - | 0.1 | |
| | | *SP- (Medium) SAND (moist)* Brown, fine | | - | 0.1 | |
| 10 | | | | - | 0.0 | |
| | | | | - | 0.0 | |
| 12 | | *SP- (Medium) SAND (saturated)* Brown, fine, trace gravel | | - | 0.0 | |
| 14 | | | | - | 0.0 | |
| | | | | - | 0.0 | |
| 16 | | | | - | 0.0 | |
| | | | | - | 0.0 | |
| 18 | | *CL- (Stiff) CLAY (moist)* Gray, some fine sand | | - | 0.1 | |
| | | | | - | 0.2 | |
| 20 | | | | | | |

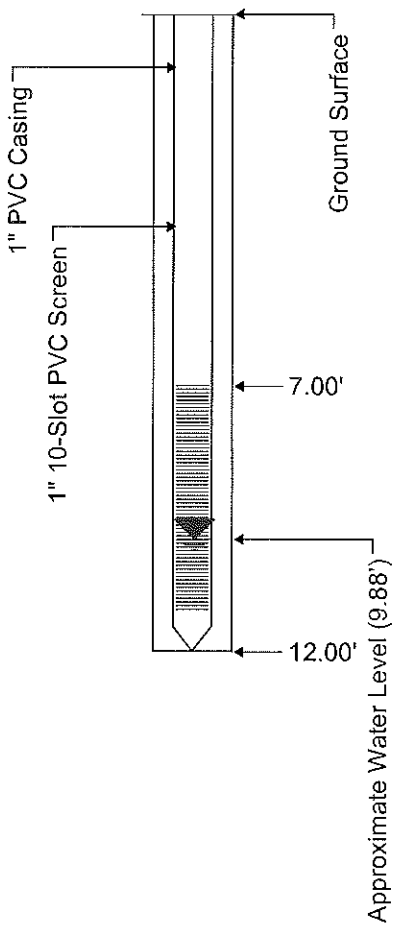


***Completion Notes:*** EOB @ 20' bgs.

1. The indicated stratification lines are approximate in situ. The transitions between materials may be gradual.
2. Boring backfilled with natural soils unless otherwise noted

# Well Log .

**Project No.:** 01-4982-0-005
**Well No.:** SB-19/MW-16
**Project Name:** Beacon and Bridge #8
**Date Drilled:** 1/14/2016
**Facility ID#:**
**Drill Rig:** 7822 / HA
**Logged By:** SS
**Sampling Method:** 2 1/8" MC, 3 1/4" S Bucket

PM ENVIRONMENTAL

## SUBSURFACE PROFILE / SAMPLE

| Depth (ft.) | Description and Comments | Sample # Depth | Blow Counts | PID (ppm) |
|---|---|---|---|---|
| | Ground Surface | | | |
| 0 | ***CONCRETE*** | | - | 0.0 |
| | ***SW- (Loose) SAND (moist)*** Borwn, fine, with some gravel and trace debris | | - | 0.0 |
| 2 | ***SP- (Loose) SAND (moist)*** Brown, fine, with gravel | | - | 0.0 |
| | | | - | 0.0 |
| 4 | | | - | 0.0 |
| | | | - | 0.0 |
| 6 | | SS-1 6.0 - 7.0' | - | 0.0 |
| | | | - | 0.0 |
| 8 | ***SP- (Loose) SAND (moist)*** Brown, fine | | - | 0.0 |
| | ***SP- (Loose) SAND (saturated)*** Brown, fine | | - | 0.0 |
| 10 | | | - | 0.0 |
| | | | - | 0.0 |
| 12 | | | - | 0.0 |
| | | | - | 0.0 |
| 14 | | | - | 0.0 |
| | | | - | 0.0 |
| 16 | | | - | 0.0 |
| | ***SW- (Loose) SAND (saturated)*** Brown, with some gravel and coarse sand | | - | 0.0 |
| 18 | | | - | 0.0 |
| | ***CL- (Medium) CLAY (moist)*** Gray, with sand, trace gravel | SS-2 19.0 - 20.0' | - | 0.0 |
| 20 | | | | |

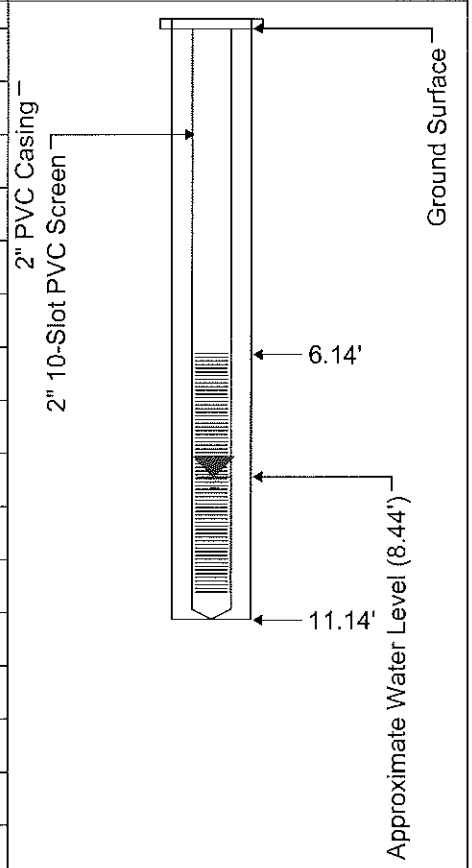


**Completion Notes:** EOB @ 20' bgs.

1. The indicated stratification lines are approximate in situ. The transitions between materials may be gradual.
2. Boring backfilled with natural soils unless otherwise noted

# Well Log .

**Project No.:** 01-4982-0-005
**Well No.:** SB-20/MW-17
**Project Name:** Beacon and Bridge #8
**Date Drilled:** 1/12/2016
**Facility ID#:**
**Drill Rig:** 7822 / HA
**Logged By:** SS
**Sampling Method:** 2 1/8" MC, 3 1/4" S Bucket

PM ENVIRONMENTAL

| Depth (ft.) | Description and Comments | Sample # Depth | Blow Counts | PID (ppm) |
|---|---|---|---|---|
| 0 | Ground Surface | | | |
| | *ASPHALT* | | - | 0.0 |
| | *CONCRETE/GRAVEL* | | - | 0.0 |
| 2 | *SP- (Loose) SAND (moist)* Dark Brown, fine | | - | 0.0 |
| | | | - | 0.0 |
| 4 | *SP- (Loose) SAND (moist)* Brown, fine, trace gravel | | - | 0.0 |
| | | | - | 0.0 |
| 6 | | | - | 0.0 |
| | | | - | 0.0 |
| 8 | | SS-1 8.0 - 9.0' | - | 0.0 |
| | | | - | 0.0 |
| 10 | *SP- (Loose) SAND (moist)* Brown, fine | | - | 0.0 |
| | | | - | 0.0 |
| 12 | *SP- (Loose) SAND (saturated)* Brown, fine, trace coarse sand | | - | 0.0 |
| | | | - | 0.0 |
| 14 | | | - | 0.0 |
| | | | - | 0.0 |
| 16 | | | - | 0.0 |
| | | | - | 0.0 |
| 18 | *CL- (Medium) CLAY (moist)* Gray, with some sand, trace gravel | | - | 0.0 |
| | | | - | 0.0 |
| 20 | | | | |

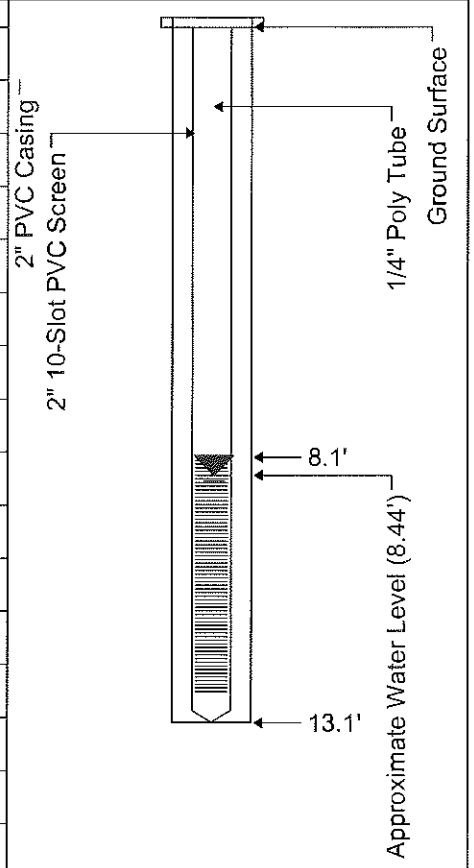


**Completion Notes:** EOB @ 20' bgs.

1. The indicated stratification lines are approximate in situ. The transitions between materials may be gradual.
2. Boring backfilled with natural soils unless otherwise noted

# Well Log .

**Project No.:** 01-4982-0-005
**Well No.:** SB-21/MW-18
**Project Name:** Beacon and Bridge #8
**Date Drilled:** 1/14/2016
**Facility ID#:**
**Drill Rig:** 7822
**Logged By:** SS
**Sampling Method:** 2 1/8" MC, 3 1/4" S Bucket

PM ENVIRONMENTAL

| SUBSURFACE PROFILE | | | SAMPLE | | | |
|---|---|---|---|---|---|---|
| Depth (ft.) | Boring Profile | Description and Comments | Sample # Depth | Blow Counts | PID (ppm) | Groundwater Well Completion Details |
| | | Ground Surface | | | | |
| 0 | | ***GRAVEL*** | | - | 0.0 | |
| | | ***SP- (Medium) SAND (moist)*** Brown, little gravel | | - | 0.0 | |
| 2 | | | | - | 0.0 | |
| | | | | - | 0.0 | |
| 4 | | | | - | 0.0 | |
| | | | | - | 0.0 | |
| 6 | | | | - | 0.0 | |
| | | | SS-1 7.0 - 8.0' | - | 0.0 | |
| 8 | | | | - | 0.0 | |
| | | | | - | 0.0 | |
| 10 | | ***SP- (Medium) SAND (saturated)*** Brown, fine | | - | 0.0 | |
| | | | | - | 0.0 | |
| 12 | | | | - | 0.0 | |
| | | | | - | 0.0 | |
| 14 | | | | - | 0.0 | |
| | | | | - | 0.0 | |
| 16 | | | | - | 0.0 | |
| | | | | - | 0.0 | |
| 18 | | ***CL- (Medium) CLAY (moist)*** Gray, with sand, trace gravel | | - | 0.0 | |
| | | | | - | 0.0 | |
| 20 | | | | | | |

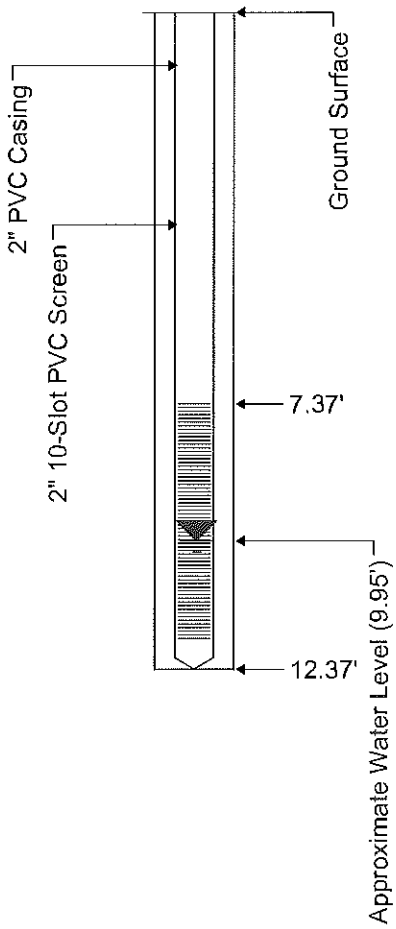


***Completion Notes:*** EOB @ 20' bgs. Hole filled with MW-18.

1. The indicated stratification lines are approximate in situ. The transitions between materials may be gradual.
2. Boring backfilled with natural soils unless otherwise noted

# Well Log .

**Project No.:** 01-4982-0-005
**Well No.:** SB-22/MW-19
**Project Name:** Beacon and Bridge #8
**Date Drilled:** 1/12/2016
**Facility ID#:**
**Drill Rig:** HA / 7822
**Logged By:** SS
**Sampling Method:** 2 1/8" MC5, 3 1/4" S Bucket

PM ENVIRONMENTAL

| SUBSURFACE PROFILE | | | SAMPLE | | | |
|---|---|---|---|---|---|---|
| Depth (ft.) | Boring Profile | Description and Comments | Sample # Depth | Blow Counts | PID (ppm) | Groundwater Well Completion Details |
| | | Ground Surface | | | | |
| 0 | | ***GRASS/TOP SOIL*** | | | | |
| | | ***SP- (Loose) SAND (moist)***<br>Light Brown, fine | | - | 0.0 | |
| | | | | - | 0.0 | |
| 2 | | | | - | 0.0 | |
| | | | | - | 0.0 | |
| 4 | | | SS-1<br>4.0 - 5.0' | - | 0.0 | |
| | | | | - | 0.0 | |
| 6 | | ***SP- (Loose) SAND (moist)***<br>Light Brown, fine, little coarse sand | | - | 0.0 | |
| | | ***SP- (Loose) SAND (saturated)***<br>Light Brown, fine | | - | 0.0 | |
| 8 | | | | - | 0.0 | |
| | | ***SC- (Medium) CLAYEY SAND (saturated)***<br>Fine, little gravel | | - | 0.0 | |
| 10 | | | | | | |

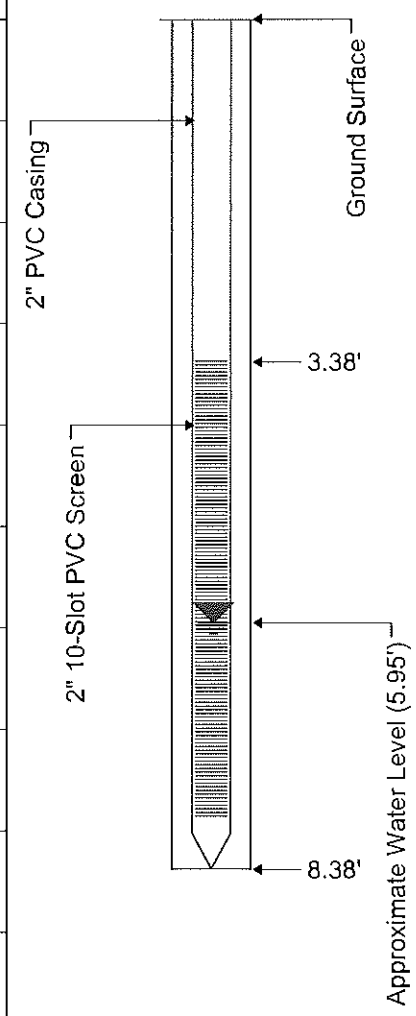


***Completion Notes:*** EOB @ 20' bgs.

1. The indicated stratification lines are approximate in situ. The transitions between materials may be gradual.
2. Boring backfilled with natural soils unless otherwise noted

# Well Log .

**Project No.:** 01-4982-0-005
**Project Name:** Beacon and Bridge #8
**Facility ID#:**
**Logged By:** SS

**Well No.:** SB-23/MW-20
**Date Drilled:** 1/15/2016
**Drill Rig:** 7822 / HA
**Sampling Method:** 2 1/8" MC, 3 1/4" S Bucket

| SUBSURFACE PROFILE | | | SAMPLE | | | |
|---|---|---|---|---|---|---|
| Depth (ft.) | Boring Profile | Description and Comments | Sample # Depth | Blow Counts | PID (ppm) | Groundwater Well Completion Details |
| | | Ground Surface | | | | |
| 0 | | ***GRASS/TOP SOIL*** | | - | 0.0 | |
| | | ***SP- (Loose) SAND (moist)***<br>Brown, fine, little gravel | | - | 0.0 | |
| 2 | | | | - | 0.0 | |
| | | | | - | 0.0 | |
| 4 | | | | - | 0.0 | |
| | | | | - | 0.0 | |
| 6 | | | | - | 0.0 | |
| | | ***SC- (Soft) CLAYEY SAND (moist)***<br>Brown, some clay, intermittent saturated sand seams | | - | 0.0 | |
| 8 | | | | - | 0.0 | |
| | | | | - | 0.0 | |
| 10 | | | | - | 0.0 | |
| | | | | - | 0.0 | |
| 12 | | ***CL- (Stiff) CLAY (moist)***<br>Gray, little sand, trace gravel | | - | 0.0 | |
| | | | | - | 0.0 | |
| 14 | | | | - | 0.0 | |
| 16 | | | | | | |

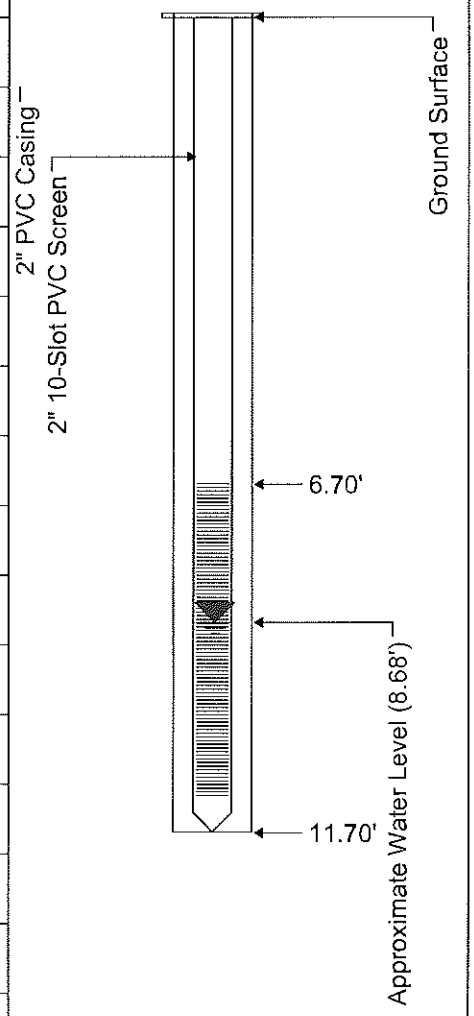


***Completion Notes:*** EOB @ 15' bgs.

1. The indicated stratification lines are approximate in situ. The transitions between materials may be gradual.
2. Boring backfilled with natural soils unless otherwise noted

# Soil Gas Log:

**Project No.:** 01-4982-0-002
**Well No.:** SG-3
**Project Name:** Beacon and Bridge #8
**Date Drilled:** 9/17/2015
**Facility ID#:**
**Drill Rig:** HA
**Logged By:** SS
**Sampling Method:** Hand Auger

| SUBSURFACE PROFILE | | | SAMPLE | | | |
|---|---|---|---|---|---|---|
| Depth (ft.) | Boring Profile | Description and Comments | Sample # Depth | Blow Counts | PID (ppm) | Soil Gas Well Installed |
| | | Ground Surface | | | | |
| 0 | | *GRASS* | | | | |
| | | *SP- (Loose) SAND (moist)* Brown, with some debris | | - | 0.0 | |
| | | | | - | 0.0 | |
| 2 | | | | - | 0.0 | |
| | | | | - | 0.0 | |
| 4 | | | | - | 0.0 | |
| | | | | - | 0.0 | |
| 6 | | | | - | 0.0 | |
| | | | | - | 0.0 | |
| 8 | | | | - | 0.0 | |
| | | | | - | 0.0 | |
| 10 | | | | | | |

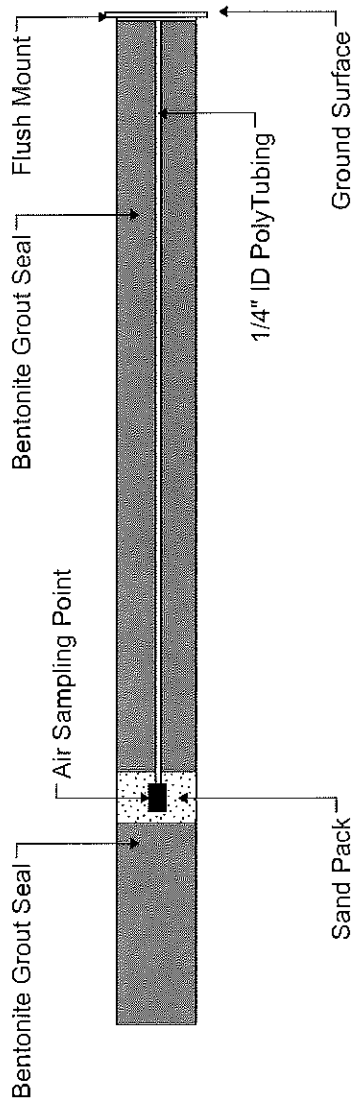


**Completion Notes:** EOB @ 10' bgs.

1. Boring backfilled with natural soils unless otherwise noted

**Sheet:** 1 of 1

# Soil Gas Log:

**Project No.:** 01-4982-0-002
**Project Name:** Beacon and Bridge #8
**Facility ID#:**
**Logged By:** SS

**Well No.:** SG-4
**Date Drilled:** 9/16/2015
**Drill Rig:** HA/6610
**Sampling Method:** 2 1/8" MC, 3 1/4" Bucket

| SUBSURFACE PROFILE | | | SAMPLE | | | |
|---|---|---|---|---|---|---|
| Depth (ft.) | Boring Profile | Description and Comments | Sample # Depth | Blow Counts | PID (ppm) | Soil Gas Well Installed |
| | | Ground Surface | | | | |
| 0 | | *LANDSCAPING* | | | | |
| | | *SP- (Loose) SAND (moist)* Brown, fine, with trace clay and gravel | | - | 0.1 | |
| | | | | - | 0.0 | |
| 2 | | | | - | 0.2 | |
| | | | | - | 0.1 | |
| 4 | | *SC- (Medium) CLAYEY SAND (moist)* Brown, fine | | - | 0.1 | |
| | | | | - | 0.1 | |
| 6 | | | | | | |

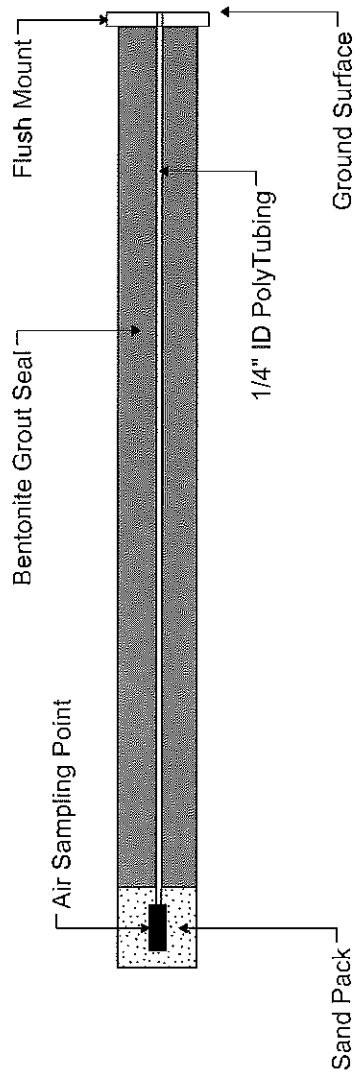


***Completion Notes:*** EOB @ 6' bgs.

1. Boring backfilled with natural soils unless otherwise noted

# Soil Gas Log:

**Project No.:** 01-4982-0-002
**Well No.:** SG-5
**Project Name:** Beacon and Bridge #8
**Date Drilled:** 9/17/2015
**Facility ID#:**
**Drill Rig:** HA
**Logged By:** SS
**Sampling Method:** 2 1/4" Stainless Bucket

PM ENVIRONMENTAL

| SUBSURFACE PROFILE | | | SAMPLE | | | |
|---|---|---|---|---|---|---|
| Depth (ft.) | Boring Profile | Description and Comments | Sample # Depth | Blow Counts | PID (ppm) | Soil Gas Well Installed |
| | | Ground Surface | | | | |
| 0 | | *GRASS/TOP SOIL* | | | | |
| | | *SP- (Medium Loose) SAND (moist)* Brown, fine | | - | 0.1 | |
| | | | | - | 0.0 | |
| 2 | | | | - | 0.0 | |
| | | | | - | 0.1 | |
| | | *SP- (Loose) SAND (moist)* Brown/Gray | | | | |
| 4 | | | | - | 0.0 | |
| | | | | - | 0.1 | |
| 6 | | | | | | |

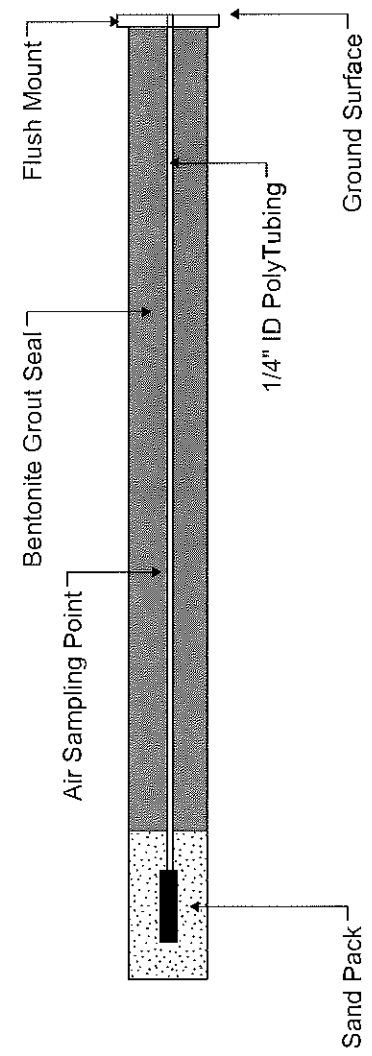


**Completion Notes:** EOB @ 6.5' bgs.

1. Boring backfilled with natural soils unless otherwise noted

# Soil Gas Log:

**Project No.:** 01-4982-0-002
**Well No.:** SG-6
**Project Name:** Beacon and Bridge #8
**Date Drilled:** 9/17/2015
**Facility ID#:**
**Drill Rig:** 6610
**Logged By:** SS
**Sampling Method:** 2 1/8" MC

| SUBSURFACE PROFILE | | | SAMPLE | | | |
|---|---|---|---|---|---|---|
| Depth (ft.) | Boring Profile | Description and Comments | Sample # Depth | Blow Counts | PID (ppm) | Soil Gas Well Installed |
| | | Ground Surface | | | | |
| 0 | | *ASPHALT* | | | | |
| | | *GRAVEL* | | - | 0.1 | |
| | | *SW- (Loose) SAND (moist)* Brown, fine, with gravel | | - | 0.1 | |
| 2 | | | | - | 0.0 | |
| | | *SP- (Medium) SAND (moist)* Light Brown, fine | | - | 0.0 | |
| 4 | | | | - | 0.0 | |
| | | | | - | 0.3 | |
| 6 | | | | | | |

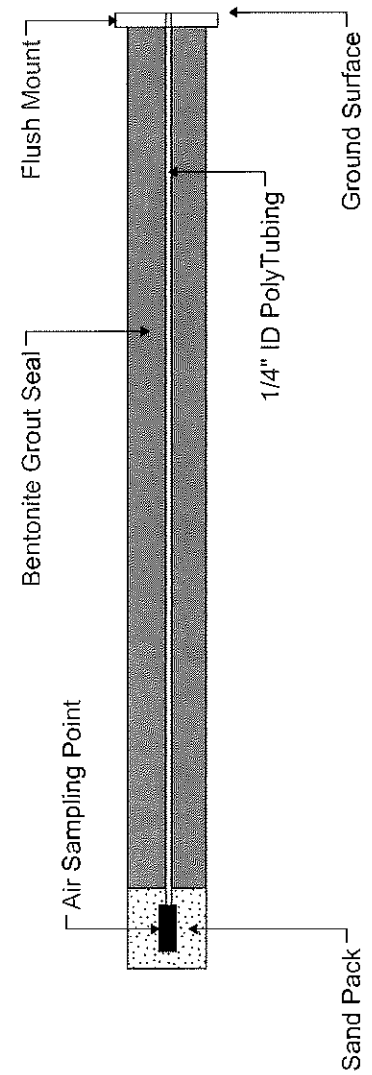


**Completion Notes:** EOB @ 6' bgs.

1. Boring backfilled with natural soils unless otherwise noted

# Soil Gas Log:

**Project No.:** 01-4982-0-002
**Well No.:** SG-7
**Project Name:** Beacon and Bridge #8
**Date Drilled:** 9/15/2015
**Facility ID#:**
**Drill Rig:** 6610
**Logged By:** SS
**Sampling Method:** 2 1/8" MC 3 1/4" Bucket

PM ENVIRONMENTAL

| SUBSURFACE PROFILE | | | SAMPLE | | | |
|---|---|---|---|---|---|---|
| Depth (ft.) | Boring Profile | Description and Comments | Sample # Depth | Blow Counts | PID (ppm) | Soil Gas Well Installed |
| | | Ground Surface | | | | |
| 0 | | ***GRASS/TOP SOIL*** | | | | |
| | | ***SP- (Loose) SAND (moist)*** Light Brown, trace gravel | | - | 0.0 | |
| | | | | - | 0.1 | |
| 2 | | | | - | 0.1 | |
| | | | | - | 0.0 | |
| 4 | | | | - | 0.0 | |
| | | | | - | 0.0 | |
| 6 | | | | - | 3.6 | |
| | | | | - | 4.7 | |
| 8 | | ***SW- (Loose) SAND (moist)*** Brown, with gravel | | - | 77 | |
| | | | | - | 1311 | |
| 10 | | | | | | |

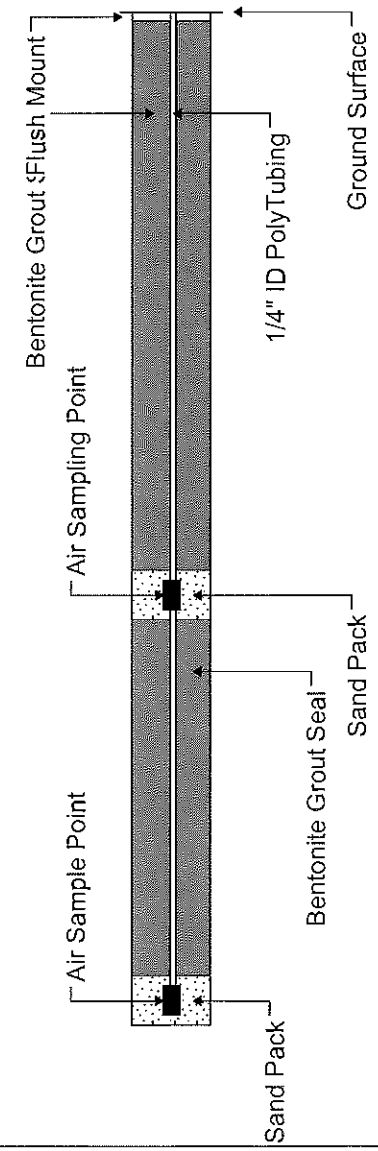


***Completion Notes:*** EOB @ 10' bgs.

1. Boring backfilled with natural soils unless otherwise noted

***Sheet:*** 1 of 1

# Soil Gas Log:

**Project No.:** 01-4982-0-002
**Well No.:** SG-8
**Project Name:** Beacon and Bridge #8
**Date Drilled:** 9/14/2015
**Facility ID#:**
**Drill Rig:** 6610
**Logged By:** SS
**Sampling Method:** 2 1/8" MC

| SUBSURFACE PROFILE | | | SAMPLE | | | |
|---|---|---|---|---|---|---|
| Depth (ft.) | Boring Profile | Description and Comments | Sample # Depth | Blow Counts | PID (ppm) | Soil Gas Well Installed |
| | | Ground Surface | | | | |
| 0 | | ***GRASS/TOP SOIL*** | | | | |
| | | ***SP- (Medium Loose) SAND (moist)*** Brown, fine | | - | 0.0 | |
| | | | | - | 0.0 | |
| 2 | | | | - | 0.0 | |
| | | | | - | 0.0 | |
| 4 | | | | - | 0.0 | |
| | | | | - | 0.0 | |
| 6 | | | | | | |

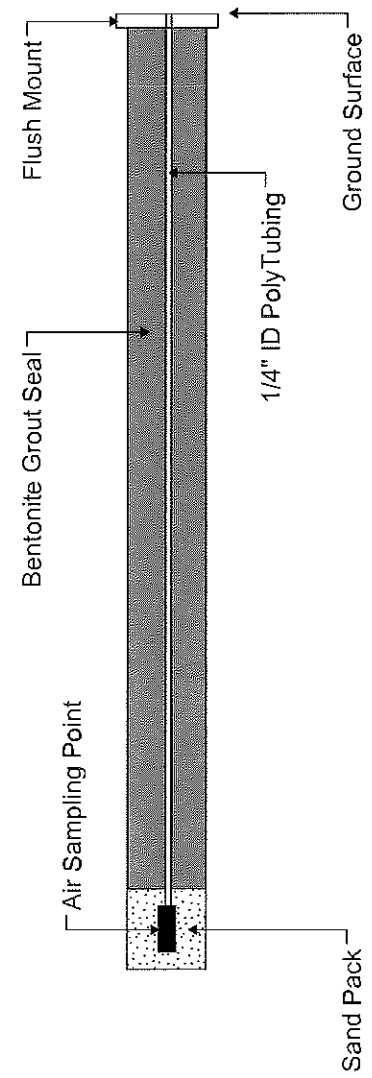


***Completion Notes:*** EOB @ 6' bgs.

1. Boring backfilled with natural soils unless otherwise noted

# Soil Gas Log:

**Project No.:** 01-4982-0-002
**Project Name:** Beacon and Bridge #8
**Facility ID#:**
**Logged By:** SS

**Well No.:** SG-9
**Date Drilled:** 9/14/2015
**Drill Rig:** 6610
**Sampling Method:** 2 1/8" MC 3 1/4" HA

| SUBSURFACE PROFILE | | | SAMPLE | | | |
|---|---|---|---|---|---|---|
| Depth (ft.) | Boring Profile | Description and Comments | Sample # Depth | Blow Counts | PID (ppm) | Soil Gas Well Installed |
| | | Ground Surface | | | | |
| 0 | | *ASPHALT* | | | | |
| | | *GRAVEL* | | - | 223 | |
| | | *SP- (Loose) SAND (moist)* Light Brown, fine, trace gravel | | - | 211 | |
| 2 | | | | - | 289 | |
| | | | | - | 78 | |
| 4 | | | | - | 75 | |
| | | | | - | 93 | |
| 6 | | | | | | |

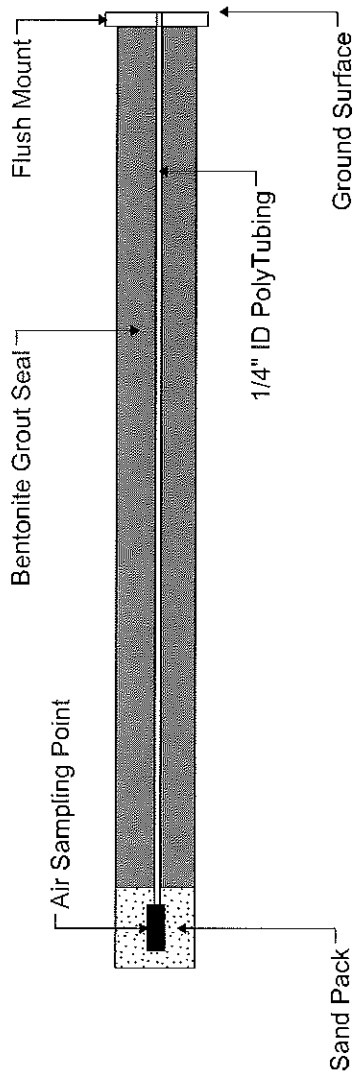


**Completion Notes:** EOB @ 6' bgs.

1. Boring backfilled with natural soils unless otherwise noted

**Sheet:** 1 of 1

# Soil Gas Log:

**Project No.:** 01-4982-0-002
**Well No.:** SG-10
**Project Name:** Beacon and Bridge #8
**Date Drilled:** 9/14/2015
**Facility ID#:**
**Drill Rig:** 6610/HA
**Logged By:** SS
**Sampling Method:** 2 1/8" MC 3 1/8" Bucket

| SUBSURFACE PROFILE | | | SAMPLE | | | |
|---|---|---|---|---|---|---|
| Depth (ft.) | Boring Profile | Description and Comments | Sample # Depth | Blow Counts | PID (ppm) | Soil Gas Well Installed |
| | | Ground Surface | | | | |
| 0 | | ***BRICK*** | | | | |
| | | ***SP- (Loose) SAND (moist)*** Brown, fine, trace sand and gravel | | - | 0.0 | |
| | | | | - | 0.2 | |
| 2 | | | | - | 0.1 | |
| | | | | - | 0.2 | |
| 4 | | | | - | 0.1 | |
| | | | | - | 1.6 | |
| 6 | | | | | | |

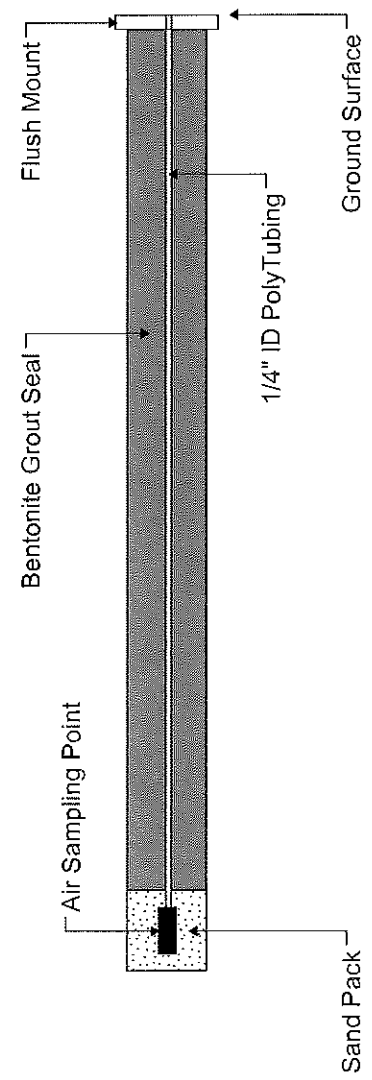


***Completion Notes:*** EOB @ 6' bgs.

1. Boring backfilled with natural soils unless otherwise noted

# Soil Gas Log:

**Project No.:** 01-4982-0-002
**Well No.:** SG-11
**Project Name:** Beacon and Bridge #8
**Date Drilled:** 9/17/2015
**Facility ID#:**
**Drill Rig:** HA
**Logged By:** SS
**Sampling Method:** Hand Auger

PM ENVIRONMENTAL

| SUBSURFACE PROFILE | | | SAMPLE | | | |
|---|---|---|---|---|---|---|
| Depth (ft.) | Boring Profile | Description and Comments | Sample # Depth | Blow Counts | PID (ppm) | Soil Gas Well Installed |
| | | Ground Surface | | | | |
| 0 | | *ASPHALT* | | | | |
| | | ***SP- SAND (moist)*** Brown/Gray, trace debris | | - | 55 | |
| | | | | - | 46 | |
| 2 | | | | - | 41 | |
| | | | | - | 7.4 | |
| 4 | | | | - | 36 | |
| | | | | - | 59 | |
| 6 | | | | - | 168 | |
| | | | | - | 396 | |
| 8 | | ***SP- (Loose) SAND (moist)*** Brown/Gray, coarse | | - | 264 | |
| | | | | - | 412 | |
| 10 | | | | | | |

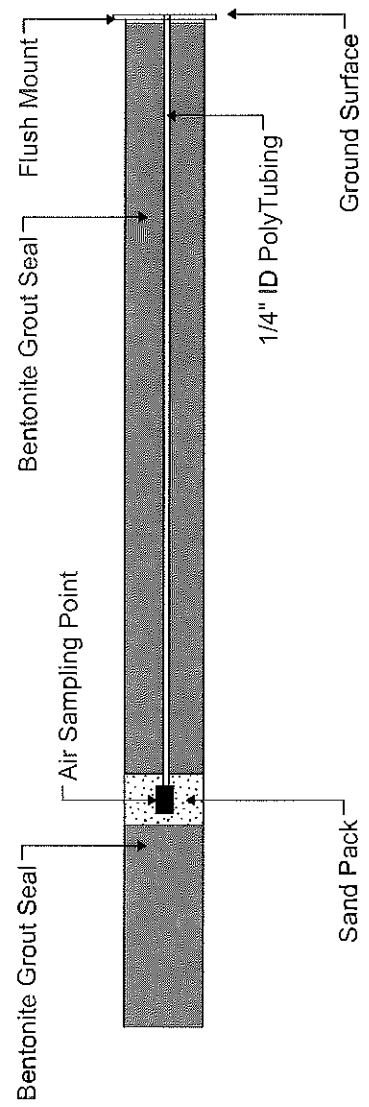


**Completion Notes:** EOB @ 10' bgs.

1. Boring backfilled with natural soils unless otherwise noted

**Sheet:** 1 of 1

# Soil Gas Log:

**Project No.:** 01-4982-0-002
**Project Name:** Beacon and Bridge #8
**Facility ID#:**
**Logged By:** SS

**Well No.:** SG-12
**Date Drilled:** 9/14/2015
**Drill Rig:** 6610/HA
**Sampling Method:** 2 1/8" MC 3 1/8" Bucket

| SUBSURFACE PROFILE | | | SAMPLE | | | |
|---|---|---|---|---|---|---|
| Depth (ft.) | Boring Profile | Description and Comments | Sample # Depth | Blow Counts | PID (ppm) | Soil Gas Well Installed |
| | | Ground Surface | | | | |
| 0 | | *TOP SOIL/LANDSCAPE BRICK* | | | | |
| | | ***SP- (Loose) SAND (moist)*** Light Brown, fine, trace gravel | | - | 0.0 | |
| | | | | - | 0.0 | |
| 2 | | | | - | 0.0 | |
| | | | | - | 0.3 | |
| 4 | | | | - | 0.1 | |
| | | | | - | 0.0 | |
| 6 | | | | | | |

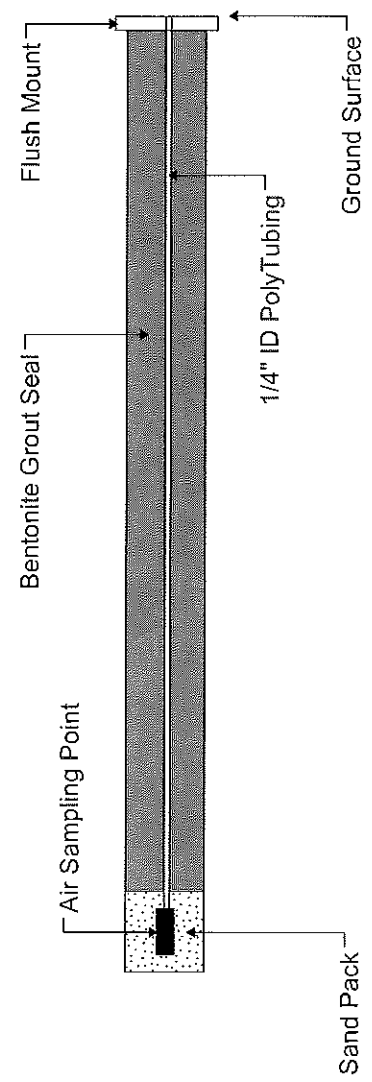


***Completion Notes:*** EOB @ 6' bgs.

1. Boring backfilled with natural soils unless otherwise noted

# Soil Gas Log:

**Project No.:** 01-4982-0-005
**Project Name:** Beacon and Bridge #8
**Facility ID#:**
**Logged By:** SS

**Well No.:** SG-13
**Date Drilled:** 1/14/2016
**Drill Rig:** 7822 / HA
**Sampling Method:** 2 1/8" MC, 3 1/4" S Bucket

| SUBSURFACE PROFILE | | | SAMPLE | | | |
|---|---|---|---|---|---|---|
| Depth (ft.) | Boring Profile | Description and Comments | Sample # Depth | Blow Counts | PID (ppm) | Soil Gas Well Installed |
| | | Ground Surface | | | | |
| 0 | | ***CONCRETE*** | | | | |
| | | ***SW- (Loose) SAND (moist)*** Borwn, fine, with some gravel and trace debris | | - | 0.0 | |
| | | | | - | 0.0 | |
| 2 | | ***SP- (Loose) SAND (moist)*** Brown, fine, with gravel | | - | 0.0 | |
| | | | | - | 0.0 | |
| 4 | | | | - | 0.0 | |
| | | | | - | 0.0 | |
| 6 | | | | | | |

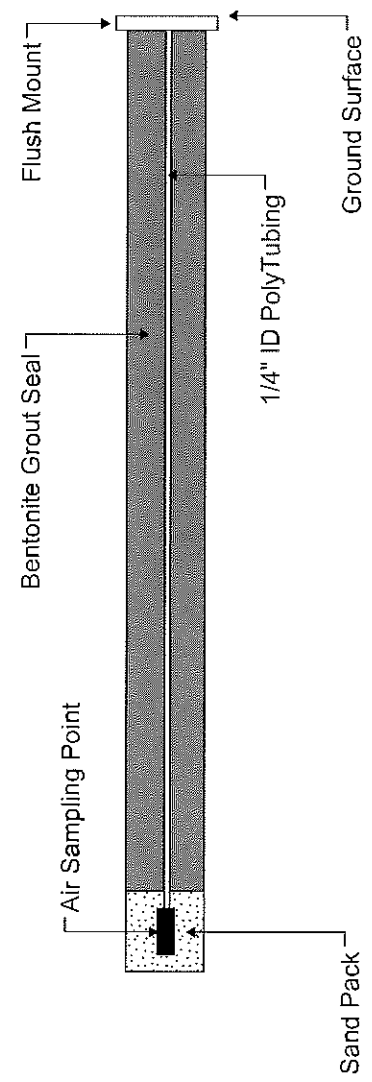


***Completion Notes:*** EOB @ 6' bgs.

1. Boring backfilled with natural soils unless otherwise noted

# Soil Gas Log: .

**Project No.:** 01-4982-0-005
**Project Name:** Beacon and Bridge #8
**Facility ID#:**
**Logged By:** SS

**Well No.:** SG-14
**Date Drilled:** 1/12/2016
**Drill Rig:** Hand Auger
**Sampling Method:** 3 1/4" Stainless Bucket

| SUBSURFACE PROFILE | | | SAMPLE | | | |
|---|---|---|---|---|---|---|
| Depth (ft.) | Boring Profile | Description and Comments | Sample # Depth | Blow Counts | PID (ppm) | Soil Gas Well Installed |
| | | Ground Surface | | | | |
| 0 | | *TOP SOIL* | | | | |
| | | *SP- (Loose) SAND (moist)* Light Brown, fine | | - | 0.0 | |
| | | | | - | 0.0 | |
| 2 | | | | - | 0.0 | |
| | | | | - | 0.0 | |
| 4 | | | | - | 0.0 | |
| | | | | - | 0.0 | |
| 6 | | | SS-1 6.0 - 7.0' | - | 0.0 | |
| | | | | - | 0.0 | |
| 8 | | *SP- (Loose) SAND (moist)* Fine to medium, trace gravel, trace coarse sand | | - | 0.0 | |
| | | *SP- (Loose) SAND (saturated)* Fine to medium, trace gravel, trace coarse sand | | - | 0.0 | |
| 10 | | | | | | |

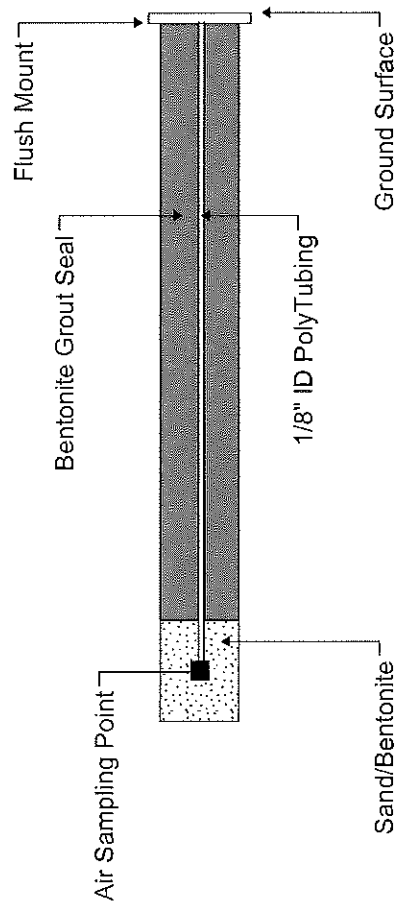


**Completion Notes:** EOB @ 10' bgs.

1. Boring backfilled with natural soils unless otherwise noted

# Soil Gas Log: .

**Project No.:** 01-4982-0-005
**Well No.:** SG-15
**Project Name:** Beacon and Bridge #8
**Date Drilled:** 1/12/2016
**Facility ID#:**
**Drill Rig:** Hand Auger
**Logged By:** SS
**Sampling Method:** 3 1/4" Stainless Bucket

| SUBSURFACE PROFILE | | | SAMPLE | | | |
|---|---|---|---|---|---|---|
| Depth (ft.) | Boring Profile | Description and Comments | Sample # Depth | Blow Counts | PID (ppm) | Soil Gas Well Installed |
| | | Ground Surface | | | | |
| 0 | | *TOP SOIL* | | | | |
| | | *SP- (Loose) SAND (moist)* Light Brown, fine | | - | 0.0 | |
| | | | | - | 0.0 | |
| 2 | | | | - | 0.0 | |
| | | | | - | 0.0 | |
| 4 | | | | - | 0.0 | |
| | | | | - | 0.0 | |
| 6 | | | | | | |

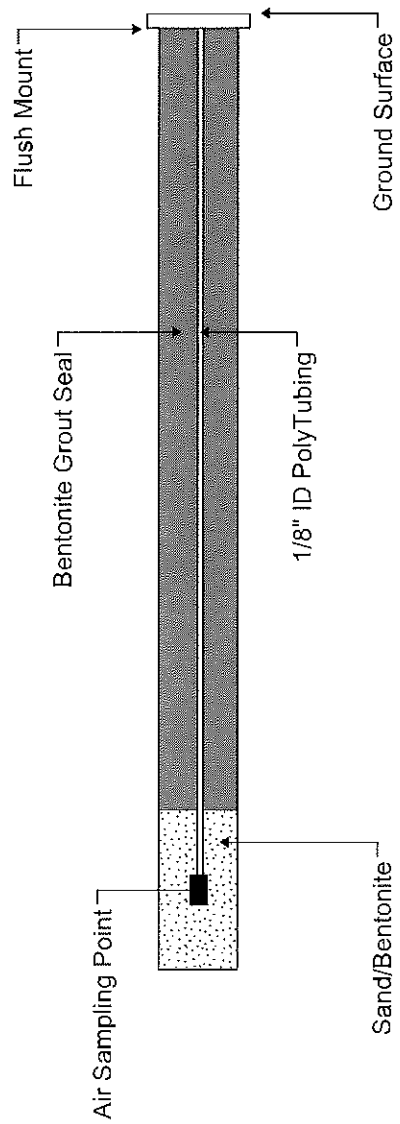


**Completion Notes:** EOB @ 6' bgs.

1. Boring backfilled with natural soils unless otherwise noted

**Sheet:** 1 of 1

# Soil Gas Log:

**Project No.:** 01-4982-0-005
**Well No.:** SG-16
**Project Name:** Beacon and Bridge #8
**Date Drilled:** 1/12/2016
**Facility ID#:**
**Drill Rig:** 7822 / HA
**Logged By:** SS
**Sampling Method:** 2 1/8" MC, 3 1/4" S Bucket

| SUBSURFACE PROFILE | | | SAMPLE | | | |
|---|---|---|---|---|---|---|
| Depth (ft.) | Boring Profile | Description and Comments | Sample # Depth | Blow Counts | PID (ppm) | Soil Gas Well Installed |
| | | Ground Surface | | | | |
| 0 | | *ASPHALT* | | | | |
| | | *CONCRETE/GRAVEL* | | - | 0.0 | |
| | | *SP- (Loose) SAND (moist)* Dark Brown, fine | | - | 0.0 | |
| 2 | | | | - | 0.0 | |
| | | | | - | 0.0 | |
| 4 | | *SP- (Loose) SAND (moist)* Brown, fine, trace gravel | | - | 0.0 | |
| | | | | - | 0.0 | |
| 6 | | | | - | 0.0 | |
| 8 | | | | | | |

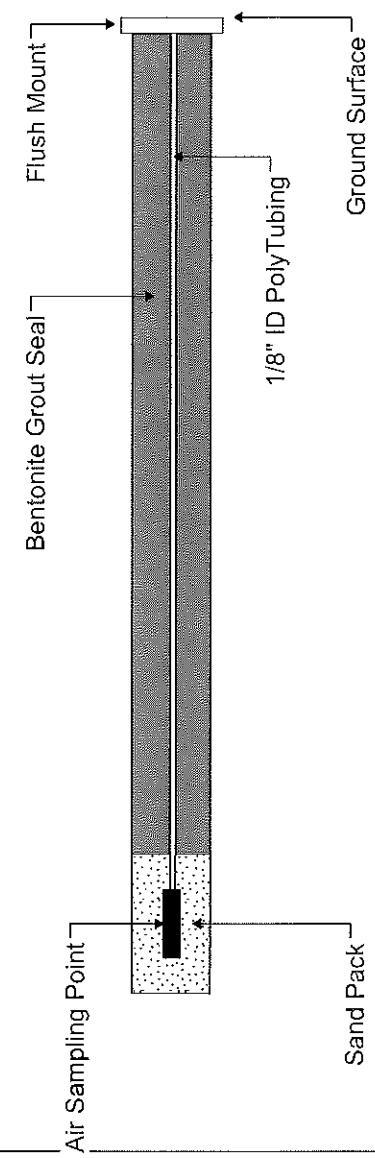


***Completion Notes:*** EOB @ 7' bgs.

1. Boring backfilled with natural soils unless otherwise noted

# Soil Gas Log: .

**Project No.:** 01-4982-0-005
**Well No.:** SG-17
**Project Name:** Beacon and Bridge #8
**Date Drilled:** 1/13/2016
**Facility ID#:**
**Drill Rig:** Hand Auger
**Logged By:** SS
**Sampling Method:** 3 1/4" Stainless Bucket

| SUBSURFACE PROFILE | | | SAMPLE | | | |
|---|---|---|---|---|---|---|
| Depth (ft.) | Boring Profile | Description and Comments | Sample # Depth | Blow Counts | PID (ppm) | Soil Gas Well Installed |
| | | Ground Surface | | | | |
| 0 | | *BRICK PAVERS* | | | | |
| | | *SP- (Loose) SAND (moist)* Light Brown, fine | | - | 0.0 | |
| | | | | - | 0.0 | |
| 2 | | *CL- (Medium) CLAY (moist)* Light Brown, some sand | | - | 0.8 | |
| | | | | - | 6.1 | |
| 4 | | | | - | 11.8 | |
| | | *SC- (Medium) CLAYEY SAND (moist)* Gray, fine, some clay | | - | 13.1 | |
| 6 | | | | - | 1.3 | |
| 8 | | | | | | |

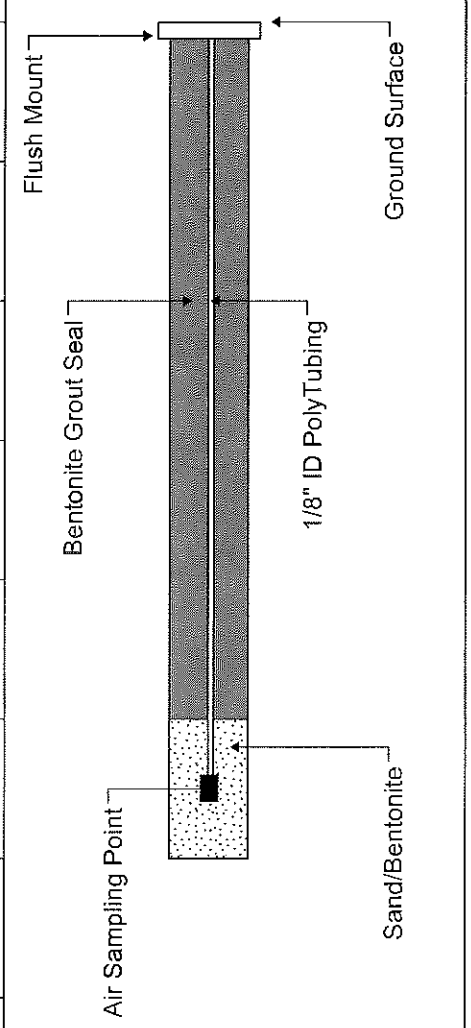


**Completion Notes:** EOB @ 7' bgs.

1. Boring backfilled with natural soils unless otherwise noted

# Soil Gas Log:

**Project No.:** 01-4982-0-005
**Well No.:** SG-18
**Project Name:** Beacon and Bridge #8
**Date Drilled:** 1/15/2016
**Facility ID#:**
**Drill Rig:** 7822 / HA
**Logged By:** SS
**Sampling Method:** 2 1/8" MC, 3 1/4" S Bucket

| SUBSURFACE PROFILE | | | SAMPLE | | | |
|---|---|---|---|---|---|---|
| Depth (ft.) | Boring Profile | Description and Comments | Sample # Depth | Blow Counts | PID (ppm) | Soil Gas Well Installed |
| | | Ground Surface | | | | |
| 0 | | *GRASS/TOP SOIL* | | | | |
| | | *SP- (Loose) SAND (moist)* Brown, fine, little gravel | | - | 0.0 | |
| | | | | - | 0.0 | |
| 2 | | | | - | 0.0 | |
| | | | | - | 0.0 | |
| 4 | | | | - | 0.0 | |
| | | | | - | 0.0 | |
| 6 | | | | | | |

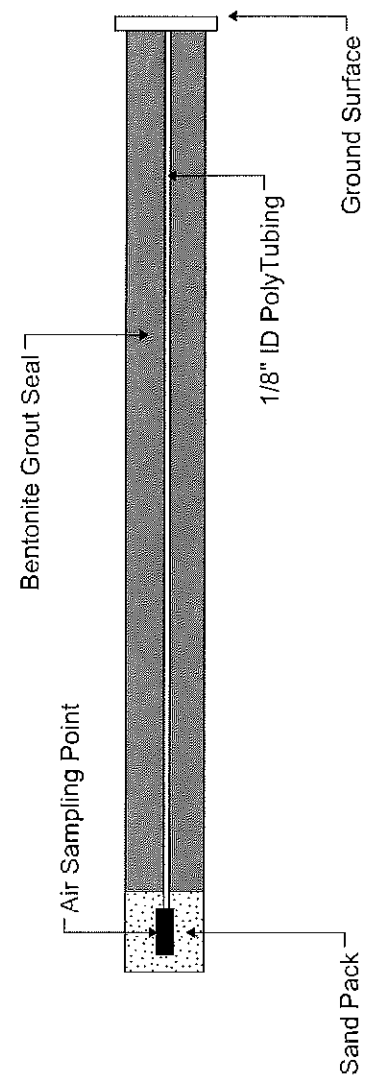


**Completion Notes:** EOB @ 6' bgs.

1. Boring backfilled with natural soils unless otherwise noted

# Soil Gas Log: .

**Project No.:** 01-4982-0-005
**Project Name:** Beacon and Bridge #8
**Facility ID#:**
**Logged By:** SS

**Well No.:** SG-19
**Date Drilled:** 1/15/2016
**Drill Rig:** Hand Auger
**Sampling Method:** 3 1/4" Stainless Bucket

| SUBSURFACE PROFILE | | | SAMPLE | | | |
|---|---|---|---|---|---|---|
| Depth (ft.) | Boring Profile | Description and Comments | Sample # Depth | Blow Counts | PID (ppm) | Soil Gas Well Installed |
| | | Ground Surface | | | | |
| 0 | | ***CONCRETE*** | | | | |
| | | ***SP- (Loose) SAND (moist)*** Brown, fine | | - | 0.0 | |
| | | | | - | 0.0 | |
| 2 | | | | - | 0.0 | |
| | | | | - | 0.0 | |
| 4 | | | | - | 0.0 | |
| | | ***SW- (Loose) SAND (saturated)*** Fine to coarse, mixed gravel | | - | 0.0 | |
| 6 | | | | | | |

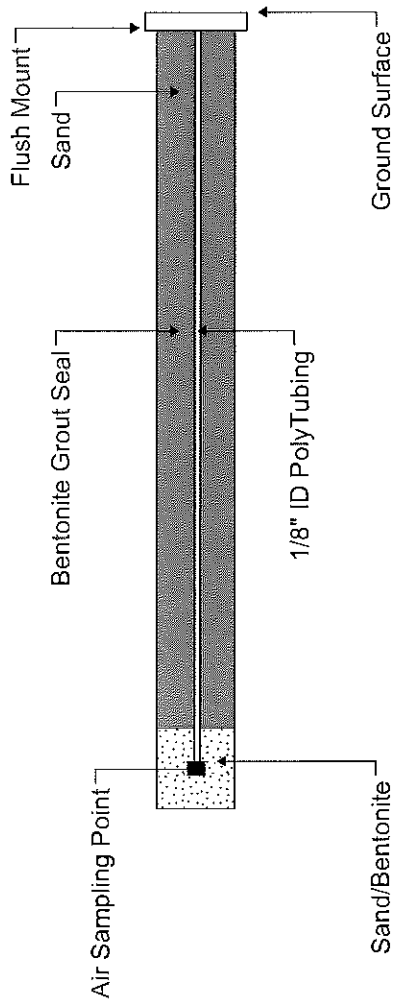


***Completion Notes:*** EOB @ 6' bgs.

1. Boring backfilled with natural soils unless otherwise noted

# Appendix B

PM ENVIRONMENTAL | Environmental & Engineering Services

Brighton Analytical L.L.C.™
2105 Piess Drive · Brighton, Michigan 48114 · Phone (810) 229-7575 · Fax (810) 229-8650 · E-mail bai-brighton@sbcglobal.net

September 24, 2015

PM Environmental, Inc.
4080 W. 11 Mile Rd.
Berkley, MI 48072

Subject: Beacon and Bridge #8
01-4982-0-002

Dear Ms. Santiago :

Thank you for making Brighton Analytical, L.L.C. your laboratory of choice. Attached are the results for the samples submitted on 09/21/2015 for the above mentioned project. NELAP/TNI Accredited Analysis and MDEQ Drinking Water Certified Analysis will be identified in their respective reporting formats. Hard copies can be supplied at your request for a fee of $20.00 per copy.

The invoice for this project will be emailed separately. If you have any questions concerning the data or invoice, please don't hesitate to contact our office. We welcome your comments and suggestions to improve our quality systems. Please reference Brighton Analytical, L.L.C. Project ID 36031 when calling or emailing. We thank you for this opportunity to partner with you on this project and hope to work with you again in the future.

Sincerely,
Brighton Analytical, L.L.C.

DEQ
NELAP ACCREDITED TNI LABORATORY
Certified WBENC Women's Business Enterprise

**Brighton Analytical, L.L.C.™**
Email: bai-brighton@sbcglobal.net
2105 Pless Drive
Brighton, MI 48114
Phone: 810-229-7575
Fax: 810-229-8650

BA PROJECT #: 36C31

**ABBREVIATIONS FOR MATRIX**
S = Solid
L = Liquid
DW = Drinking $H_2O$
O = Oil
P = Wipe
A = Air (Tedlar Bag)
F = Filter
T = Tube
M = Misc.

PROJECT NAME: BEACON And BRidge #8

PROJECT #: 01-4982-0-002

PO #: (PLEASE NOTE IF DIFFERENT BILLING ADDRESS)

Sample collected by: STEVE

**REQUESTED TURNAROUND:** (circle one)
Rush: 1-3 business days (verify with lab & specify date needed)
1 Day = 2.5X Cost 2 Day = 2X Cost 3 Day = 1.5X Cost
Standard: 5 business days

If RUSH, approved by: _____

**Analysis Requested/Method**

| Brighton ID # | Sample Description | Date 2015 | Time | VOA's (PRES) Y N N/A | HDPE UNPRESERVED | HDPE $HNO_3$ | HDPE $H_2SO_4$ | HDPE NAOH | AMBER PRESERVED? | GLASS, NO PRESERVATIVE | STERILIZED BACTERIA | MEOH Preserved Y/N | Sample Matrix | LEADED/UNLEADED GAS VOC | GRO | TPH | | MS MSD | HOLD | ENCORE SAMPLE COLLECTED | |
|---|---|---|---|---|---|---|---|---|---|---|---|---|---|---|---|---|---|---|---|---|---|
| CB 09949 | SB-9 7'-8' | 09/17 | 1053 | | | | | | | 1 | | 1 | S | X | X | | | | | | |
| 2) 9950 | SB-10 2'-3' | 09/15 | 1620 | | | | | | | 1 | | 1 | S | X | X | | | | | | |
| 3) 9951 | SB-10 9'-10' | 09/15 | 1000 | | | | | | | 1 | | 1 | S | X | X | | | | | | |
| 4) 9952 | SB-11 7'-8' | 09/15 | 1628 | | | | | | | 1 | | 1 | S | X | X | | | | | | |
| 5) 9953 | SB-12 7'-8' | 09/17 | 1011 | | | | | | | 1 | | 1 | S | X | X | | | | | | |
| 6) 9954 | SB-13 15'-16' | 09/15 | 1412 | | | | | | | 1 | | 1 | S | X | X | | | | | X | |
| 7) 9955 | SB-13 19'-20' | 09/15 | 1415 | | | | | | | 1 | | 1 | S | X | X | | | | | | |
| 8) 9956 | SB-14 7'-8' | 09/14 | 1435 | | | | | | | 1 | | 1 | S | X | X | | | | | | |
| 9) 9957 | SB-14 9'-10' | 09/14 | 1440 | | | | | | | 1 | | 1 | S | X | X | | | | | X | |
| 10) 9958 | SB-14 14'-15' | 09/14 | 1445 | | | | | | | 1 | | 1 | S | X | X | | | | | | |

COMPANY/MAILING ADDRESS:
4080 W. Eleven mile Rd
Berkley MI
48072

ATTN: Christie Santiago
PHONE: 248 336 9988
FAX OR EMAIL: Santiago@pwenv.com

Samples received within hold time? yes ☒ no ☐
Temperature of samples °C: 4
pHs verified in login? yes ☒ no ☐
Headspace/bubbles in VOA's? yes ☐ no ☒ n/a ☐
Sample containers and COC match? yes ☒ no ☐

BILLING ADDRESS (IF REQUIRED):

**Drinking $H_2O$:**
Fax to LCHD? yes ☐ no ☐
Chlorinated Water Supply? yes ☐ no ☐
AMT.: _____

MCL Failure: yes ☐ no ☐
Client Notified (date/time/initials): _____

**Special Instructions:**

***Please fill out the Chain of Custody completely and review. Incorrect or incomplete information will result in a "hold" on all analyses.***

| Trans. # | RELINQUISHED BY: | RECEIVED BY: | DATE: | TIME: | Trans. # | RELINQUISHED BY: | RECEIVED BY: | DATE: | TIME: |
|---|---|---|---|---|---|---|---|---|---|
| 1 | [signature] | Pm Storage | 09/17/15 | 2000 | 3 | | | | |
| 2 | [signature] | [signature] | 09/21/15 | 1038 | 4 | | | | |

**Brighton Analytical, L.L.C.™**
Email: bai-brighton@sbcglobal.net
2105 Pless Drive
Brighton, MI 48114
Phone: 810-229-7575
Fax: 810-229-8650

BA PROJECT #: 36031

PAGE 2 OF 2

**ABBREVIATIONS FOR MATRIX**
S = Solid
L = Liquid
DW = Drinking $H_2O$
O = Oil
P = Wipe
A = Air (Tedlar Bag)
F = Filter
T = Tube
M = Misc.

PROJECT NAME: Beacon & Bridge #8

PROJECT #: 01-4082-0-002

PO #: (PLEASE NOTE IF DIFFERENT BILLING ADDRESS)

Sample collected by: Steve

**REQUESTED TURNAROUND:** (circle one)
Rush: 1-3 business days (verify with lab & specify date needed)
1 Day = 2.5X Cost 2 Day = 2X Cost 3 Day = 1.5X Cost
Standard: 5 business days

If RUSH, approved by: _____

**Analysis Requested/Method**

| Brighton ID # | Sample Description | Sample Coll. Date 2015 | Sample Coll. Time | VOA'S (PRES. Y N N/A) | HDPE UNPRESERVED | HDPE $HNO_3$ | HDPE $H_2SO_4$ | HDPE NaOH | AMBER PRESERVED? | GLASS, NO PRESERVATIVE | STERILIZED BACTERIA | MEOH Preserved Y N | Sample Matrix | LEADED/unleaded GAS VOC | GRO | TPH | DISSOLVED Pb | MS/MSD | HOLD | ENCORE SAMPLE Collected |
|---|---|---|---|---|---|---|---|---|---|---|---|---|---|---|---|---|---|---|---|---|
| CBC 9959 | SB-15 2'-3' | 9/14 | 1130 | | | | | | | 1 | | 1 | S | X | X | | | | | |
| 2) 9960 | SB-15 8'-9' | 9/14 | 1143 | | | | | | | 1 | | 1 | S | X | X | | | | | X |
| 3) 9961 | SB-15 19'-20' | 9/14 | 1152 | | | | | | | 1 | | 1 | S | X | X | | | | | |
| 4) 9962 | SB-16 6'-7' | 9/14 | 1103 | | | | | | | 1 | | 1 | S | X | X | | | | | |
| 5) 9963 | SB-16 12'-13' | 9/15 | 1112 | | | | | | | 1 | | 1 | S | X | X | | | | | |
| 6) 9964 | SB-17 6'-7' | 9/14 | 1655 | | | | | | | 1 | | 1 | S | X | X | | | | | |
| 9965/66/67 | SB-18 7'-8' | 9/16 | 1439 | | | | | | | 1 | | 1 | S | X | X | | | X | | |
| 8) 9968 | TMW-18 ⊛ | 9/16 | 1532 | 2 | | 1 | | | 1 | | | | L | X | X | | X | | | |
| 9) | | | | | | | | | | | | | | | | | | | | |
| 10) | | | | | | | | | | | | | | | | | | | | |

**Special Instructions:** ⊛ Dissolved per bottle [illegible] 9-21-15

COMPANY/MAILING ADDRESS:
4080 West Eleven Mile Rd
Beverly MI
48072
ATTN: Christie Santiago
PHONE: 248 336 9988
FAX OR EMAIL: Santiago@PWENV.com

Samples received within hold time? yes ☐ no ☐
Temperature of samples °C:
pHs verified in login? yes ☐ no ☐
Headspace/bubbles in VOA's? yes ☐ no ☐ n/a ☐
Sample containers and COC match? yes ☐ no ☐

BILLING ADDRESS (IF REQUIRED):

**Drinking $H_2O$:**
Fax to LCHD? yes ☐ no ☐
Chlorinated Water Supply? yes ☐ no ☐
AMT.: _____

MCL Failure: yes ☐ no ☐
Client Notified (date/time/initials): _____

*Please fill out the Chain of Custody completely and review. Incorrect or incomplete information will result in a "hold" on all analyses.*

| Trans. # | RELINQUISHED BY: | RECEIVED BY: | DATE: | TIME: | Trans. # | RELINQUISHED BY: | RECEIVED BY: | DATE: | TIME: |
|---|---|---|---|---|---|---|---|---|---|
| 1 | [signature] | Pm Storage | 09/17/15 | 2000 | 3 | | | | |
| 2 | [signature] | D. Hoffner | 09/21/15 | 1035 | 4 | | | | |

Brighton Analytical L.L.C.™

**Brighton Analytical, L.L.C.**
**2105 Pless Drive**
**Brighton, Michigan 48116**
**Phone: (810) 229-7575 FAX: (810) 229-8650**
e-mail: bai-brighton@sbcglobal.net

Sample Date: 9/17/2015
Submit Date: 9/21/2015
Report Date: 9/24/2015

To: PM Environmental, Inc.
4080 W. 11 Mile Rd.
Berkley, MI 48072

BA Report Number: **36031**
BA Sample ID: **CB09949**

Project Name: **Beacon and Bridge #8**
Project Number: **01-4982-0-002**
Sample ID: **SB-9 7'-8'**

| Parameters | Results | Units | DL | Method Reference | Analyst | Analysis Date |
|---|---|---|---|---|---|---|
| **GRO Analysis** | | | | | | |
| GRO (Methanol Preserved) | <4000 | ug/Kg | 4000 | SW846 8015 | BY | 9/22/2015 |
| **Volatile Analysis(Methanol Preserved)** | | | | | | |
| Benzene | <50 | ug/Kg | 50 | SW846 8260B | CW | 9/22/2015 |
| 1,2-Dibromoethane(Ethylene Dibromide) | <20 | ug/Kg | 20 | SW846 8260B | CW | 9/22/2015 |
| 1,2-Dichloroethane | <50 | ug/Kg | 50 | SW846 8260B | CW | 9/22/2015 |
| Ethanol (Ethyl alcohol) | <2500 | ug/Kg | 2500 | SW846 8260B | CW | 9/22/2015 |
| Ethylbenzene | <50 | ug/Kg | 50 | SW846 8260B | CW | 9/22/2015 |
| Isopropylbenzene | <50 | ug/Kg | 50 | SW846 8260B | CW | 9/22/2015 |
| 2-Methylnaphthalene | <250 | ug/Kg | 250 | SW846 8260B | CW | 9/22/2015 |
| MTBE | <50 | ug/Kg | 50 | SW846 8260B | CW | 9/22/2015 |
| Naphthalene | <250 | ug/Kg | 250 | SW846 8260B | CW | 9/22/2015 |
| n-Propylbenzene | <50 | ug/Kg | 50 | SW846 8260B | CW | 9/22/2015 |
| Toluene | <50 | ug/Kg | 50 | SW846 8260B | CW | 9/22/2015 |
| 1,2,3-Trimethylbenzene | <50 | ug/Kg | 50 | SW846 8260B | CW | 9/22/2015 |
| 1,2,4-Trimethylbenzene | <50 | ug/Kg | 50 | SW846 8260B | CW | 9/22/2015 |
| 1,3,5-Trimethylbenzene | <50 | ug/Kg | 50 | SW846 8260B | CW | 9/22/2015 |
| Xylenes(total) | <150 | ug/Kg | 150 | SW846 8260B | CW | 9/22/2015 |
| EPA Method 5035 Methanol Preserv | **Extracted** | | | EPA 5035 | PME | 9/17/2015 |
| %Solid | 90 | % | | ASTM D2216 | HD | 9/21/2015 |

All soil results based on dry weight.

DL=Reported detection limit for analytical method requested. Some compounds require special analytical methods to achieve MDNR designated target detection limits (TDL).

Released by:

Date: 24 Sept 2015

**Brighton Analytical, L.L.C.**
**2105 Pless Drive**
**Brighton, Michigan 48116**
**Phone: (810) 229-7575 FAX: (810) 229-8650**
e-mail: bai-brighton@sbcglobal.net

Sample Date: 9/15/2015
Submit Date: 9/21/2015
Report Date: 9/24/2015

To: PM Environmental, Inc.
4080 W. 11 Mile Rd.
Berkley, MI 48072

BA Report Number: **36031**
BA Sample ID: **CB09950**

Project Name: **Beacon and Bridge #8**
Project Number: **01-4982-0-002**
Sample ID: **SB-10 2'-3'**

| Parameters | Results | Units | DL | Method Reference | Analyst | Analysis Date |
|---|---|---|---|---|---|---|
| **GRO Analysis** | | | | | | |
| GRO (Methanol Preserved) | <4000 | ug/Kg | 4000 | SW846 8015 | BY | 9/22/2015 |
| **Volatile Analysis(Methanol Preserved)** | | | | | | |
| Benzene | <50 | ug/Kg | 50 | SW846 8260B | CW | 9/22/2015 |
| 1,2-Dibromoethane(Ethylene Dibromide) | <20 | ug/Kg | 20 | SW846 8260B | CW | 9/22/2015 |
| 1,2-Dichloroethane | <50 | ug/Kg | 50 | SW846 8260B | CW | 9/22/2015 |
| Ethanol (Ethyl alcohol) | <2500 | ug/Kg | 2500 | SW846 8260B | CW | 9/22/2015 |
| Ethylbenzene | <50 | ug/Kg | 50 | SW846 8260B | CW | 9/22/2015 |
| Isopropylbenzene | <50 | ug/Kg | 50 | SW846 8260B | CW | 9/22/2015 |
| 2-Methylnaphthalene | <250 | ug/Kg | 250 | SW846 8260B | CW | 9/22/2015 |
| MTBE | <50 | ug/Kg | 50 | SW846 8260B | CW | 9/22/2015 |
| Naphthalene | <250 | ug/Kg | 250 | SW846 8260B | CW | 9/22/2015 |
| n-Propylbenzene | <50 | ug/Kg | 50 | SW846 8260B | CW | 9/22/2015 |
| Toluene | <50 | ug/Kg | 50 | SW846 8260B | CW | 9/22/2015 |
| 1,2,3-Trimethylbenzene | <50 | ug/Kg | 50 | SW846 8260B | CW | 9/22/2015 |
| 1,2,4-Trimethylbenzene | <50 | ug/Kg | 50 | SW846 8260B | CW | 9/22/2015 |
| 1,3,5-Trimethylbenzene | <50 | ug/Kg | 50 | SW846 8260B | CW | 9/22/2015 |
| Xylenes(total) | <150 | ug/Kg | 150 | SW846 8260B | CW | 9/22/2015 |
| EPA Method 5035 Methanol Preserv | **Extracted** | | | EPA 5035 | PME | 9/15/2015 |
| %Solid | **83** | % | | ASTM D2216 | HD | 9/21/2015 |

All soil results based on dry weight.

DL=Reported detection limit for analytical method requested. Some compounds require special analytical methods to achieve MDNR designated target detection limits (TDL).

Released by:

Date: 24 Sept 2015

**Brighton Analytical, L.L.C.**
**2105 Pless Drive**
**Brighton, Michigan 48116**
**Phone: (810) 229-7575 FAX: (810) 229-8650**
e-mail: bai-brighton@sbcglobal.net

Sample Date: 9/16/2015
Submit Date: 9/21/2015
Report Date: 9/24/2015

To: PM Environmental, Inc.
4080 W. 11 Mile Rd.
Berkley, MI 48072

BA Report Number: **36031**
BA Sample ID: **CB09951**

Project Name: **Beacon and Bridge #8**
Project Number: **01-4982-0-002**
Sample ID: **SB-10 9'-10'**

| Parameters | Results | Units | DL | Method Reference | Analyst | Analysis Date |
|---|---|---|---|---|---|---|
| **GRO Analysis** | | | | | | |
| GRO (Methanol Preserved) | <4000 | ug/Kg | 4000 | SW846 8015 | BY | 9/22/2015 |
| **Volatile Analysis(Methanol Preserved)** | | | | | | |
| Benzene | **<50** | ug/Kg | 50 | SW846 8260B | CW | 9/22/2015 |
| 1,2-Dibromoethane(Ethylene Dibromide) | **<20** | ug/Kg | 20 | SW846 8260B | CW | 9/22/2015 |
| 1,2-Dichloroethane | **<50** | ug/Kg | 50 | SW846 8260B | CW | 9/22/2015 |
| Ethanol (Ethyl alcohol) | **<2500** | ug/Kg | 2500 | SW846 8260B | CW | 9/22/2015 |
| Ethylbenzene | **<50** | ug/Kg | 50 | SW846 8260B | CW | 9/22/2015 |
| Isopropylbenzene | **<50** | ug/Kg | 50 | SW846 8260B | CW | 9/22/2015 |
| 2-Methylnaphthalene | **<250** | ug/Kg | 250 | SW846 8260B | CW | 9/22/2015 |
| MTBE | **<50** | ug/Kg | 50 | SW846 8260B | CW | 9/22/2015 |
| Naphthalene | **<250** | ug/Kg | 250 | SW846 8260B | CW | 9/22/2015 |
| n-Propylbenzene | **<50** | ug/Kg | 50 | SW846 8260B | CW | 9/22/2015 |
| Toluene | **<50** | ug/Kg | 50 | SW846 8260B | CW | 9/22/2015 |
| 1,2,3-Trimethylbenzene | **<50** | ug/Kg | 50 | SW846 8260B | CW | 9/22/2015 |
| 1,2,4-Trimethylbenzene | **<50** | ug/Kg | 50 | SW846 8260B | CW | 9/22/2015 |
| 1,3,5-Trimethylbenzene | **<50** | ug/Kg | 50 | SW846 8260B | CW | 9/22/2015 |
| Xylenes(total) | **<150** | ug/Kg | 150 | SW846 8260B | CW | 9/22/2015 |
| EPA Method 5035 Methanol Preserv | **Extracted** | | | EPA 5035 | PME | 9/16/2015 |
| %Solid | **96** | % | | ASTM D2216 | HD | 9/21/2015 |

All soil results based on dry weight.

DL=Reported detection limit for analytical method requested. Some compounds require special analytical methods to achieve MDNR designated target detection limits (TDL).

Released by: Stanley M Sita

Date: 24 Sept 2015

**Brighton Analytical, L.L.C.**
**2105 Pless Drive**
**Brighton, Michigan 48116**
**Phone: (810) 229-7575 FAX: (810) 229-8650**
e-mail: bai-brighton@sbcglobal.net

Sample Date: 9/16/2015
Submit Date: 9/21/2015
Report Date: 9/24/2015

To: PM Environmental, Inc.
4080 W. 11 Mile Rd.
Berkley, MI 48072

BA Report Number: **36031**
BA Sample ID: **CB09952**

Project Name: **Beacon and Bridge #8**
Project Number: **01-4982-0-002**
Sample ID: **SB-11 7'-8'**

| Parameters | Results | Units | DL | Method Reference | Analyst | Analysis Date |
|---|---|---|---|---|---|---|
| **GRO Analysis** | | | | | | |
| GRO (Methanol Preserved) | <4000 | ug/Kg | 4000 | SW846 8015 | BY | 9/22/2015 |
| **Volatile Analysis(Methanol Preserved)** | | | | | | |
| Benzene | <50 | ug/Kg | 50 | SW846 8260B | CW | 9/22/2015 |
| 1,2-Dibromoethane(Ethylene Dibromide) | <20 | ug/Kg | 20 | SW846 8260B | CW | 9/22/2015 |
| 1,2-Dichloroethane | <50 | ug/Kg | 50 | SW846 8260B | CW | 9/22/2015 |
| Ethanol (Ethyl alcohol) | <2500 | ug/Kg | 2500 | SW846 8260B | CW | 9/22/2015 |
| Ethylbenzene | <50 | ug/Kg | 50 | SW846 8260B | CW | 9/22/2015 |
| Isopropylbenzene | <50 | ug/Kg | 50 | SW846 8260B | CW | 9/22/2015 |
| 2-Methylnaphthalene | <250 | ug/Kg | 250 | SW846 8260B | CW | 9/22/2015 |
| MTBE | <50 | ug/Kg | 50 | SW846 8260B | CW | 9/22/2015 |
| Naphthalene | <250 | ug/Kg | 250 | SW846 8260B | CW | 9/22/2015 |
| n-Propylbenzene | <50 | ug/Kg | 50 | SW846 8260B | CW | 9/22/2015 |
| Toluene | <50 | ug/Kg | 50 | SW846 8260B | CW | 9/22/2015 |
| 1,2,3-Trimethylbenzene | <50 | ug/Kg | 50 | SW846 8260B | CW | 9/22/2015 |
| 1,2,4-Trimethylbenzene | <50 | ug/Kg | 50 | SW846 8260B | CW | 9/22/2015 |
| 1,3,5-Trimethylbenzene | <50 | ug/Kg | 50 | SW846 8260B | CW | 9/22/2015 |
| Xylenes(total) | <150 | ug/Kg | 150 | SW846 8260B | CW | 9/22/2015 |
| EPA Method 5035 Methanol Preserv | **Extracted** | | | EPA 5035 | PME | 9/16/2015 |
| %Solid | 82 | % | | ASTM D2216 | HD | 9/21/2015 |

All soil results based on dry weight.

DL=Reported detection limit for analytical method requested. Some compounds require special analytical methods to achieve MDNR designated target detection limits (TDL).

Released by: Stanley M Smith

Date: 24 Sept 2015

Brighton Analytical L.L.C.™

**Brighton Analytical, L.L.C.**
**2105 Pless Drive**
**Brighton, Michigan 48116**
**Phone: (810) 229-7575 FAX: (810) 229-8650**
e-mail: bai-brighton@sbcglobal.net

Sample Date: 9/17/2015
Submit Date: 9/21/2015
Report Date: 9/24/2015

To: PM Environmental, Inc.
4080 W. 11 Mile Rd.
Berkley, MI 48072

BA Report Number: **36031**
BA Sample ID: **CB09953**

Project Name: **Beacon and Bridge #8**
Project Number: **01-4982-0-002**
Sample ID: **SB-12 7'-8'**

| Parameters | Results | Units | DL | Method Reference | Analyst | Analysis Date |
|---|---|---|---|---|---|---|
| **GRO Analysis** | | | | | | |
| GRO (Methanol Preserved) | **<4000** | ug/Kg | 4000 | SW846 8015 | BY | 9/22/2015 |
| **Volatile Analysis(Methanol Preserved)** | | | | | | |
| Benzene | **<50** | ug/Kg | 50 | SW846 8260B | CW | 9/22/2015 |
| 1,2-Dibromoethane(Ethylene Dibromide) | **<20** | ug/Kg | 20 | SW846 8260B | CW | 9/22/2015 |
| 1,2-Dichloroethane | **<50** | ug/Kg | 50 | SW846 8260B | CW | 9/22/2015 |
| Ethanol (Ethyl alcohol) | **<2500** | ug/Kg | 2500 | SW846 8260B | CW | 9/22/2015 |
| Ethylbenzene | **<50** | ug/Kg | 50 | SW846 8260B | CW | 9/22/2015 |
| Isopropylbenzene | **<50** | ug/Kg | 50 | SW846 8260B | CW | 9/22/2015 |
| 2-Methylnaphthalene | **<250** | ug/Kg | 250 | SW846 8260B | CW | 9/22/2015 |
| MTBE | **<50** | ug/Kg | 50 | SW846 8260B | CW | 9/22/2015 |
| Naphthalene | **<250** | ug/Kg | 250 | SW846 8260B | CW | 9/22/2015 |
| n-Propylbenzene | **<50** | ug/Kg | 50 | SW846 8260B | CW | 9/22/2015 |
| Toluene | **<50** | ug/Kg | 50 | SW846 8260B | CW | 9/22/2015 |
| 1,2,3-Trimethylbenzene | **<50** | ug/Kg | 50 | SW846 8260B | CW | 9/22/2015 |
| 1,2,4-Trimethylbenzene | **<50** | ug/Kg | 50 | SW846 8260B | CW | 9/22/2015 |
| 1,3,5-Trimethylbenzene | **<50** | ug/Kg | 50 | SW846 8260B | CW | 9/22/2015 |
| Xylenes(total) | **<150** | ug/Kg | 150 | SW846 8260B | CW | 9/22/2015 |
| EPA Method 5035 Methanol Preserv | **Extracted** | | | EPA 5035 | PME | 9/17/2015 |
| %Solid | **86** | % | | ASTM D2216 | HD | 9/21/2015 |

All soil results based on dry weight.

DL=Reported detection limit for analytical method requested. Some compounds require special analytical methods to achieve MDNR designated target detection limits (TDL).

Released by: Shirley M Smith

Date: 24 Sept 2015

Brighton Analytical L.L.C.™

**Brighton Analytical, L.L.C.**
**2105 Pless Drive**
**Brighton, Michigan 48116**
**Phone: (810) 229-7575 FAX: (810) 229-8650**
e-mail: bai-brighton@sbcglobal.net

Sample Date: 9/15/2015
Submit Date: 9/21/2015
Report Date: 9/24/2015

To: PM Environmental, Inc.
4080 W. 11 Mile Rd.
Berkley, MI 48072

BA Report Number: **36031**
BA Sample ID: **CB09954**

Project Name: **Beacon and Bridge #8**
Project Number: **01-4982-0-002**
Sample ID: **SB-13 15'-16'**

| Parameters | Results | Units | DL | Method Reference | Analyst | Analysis Date |
|---|---|---|---|---|---|---|
| **GRO Analysis** | | | | | | |
| GRO (Methanol Preserved) | **690000** | ug/Kg | 28000 | SW846 8015 | BY | 9/22/2015 |
| **Volatile Analysis(Methanol Preserved)** | | | | | | |
| Benzene | **8500** | ug/Kg | 1000 | SW846 8260B | CW | 9/22/2015 |
| 1,2-Dibromoethane(Ethylene Dibromide) | **5200** | ug/Kg | 400 | SW846 8260B | CW | 9/22/2015 |
| 1,2-Dichloroethane | **5300** | ug/Kg | 1000 | SW846 8260B | CW | 9/22/2015 |
| Ethanol (Ethyl alcohol) | **<50000** | ug/Kg | 50000 | SW846 8260B | CW | 9/22/2015 |
| Ethylbenzene | **46000** | ug/Kg | 1000 | SW846 8260B | CW | 9/22/2015 |
| Isopropylbenzene | **11000** | ug/Kg | 1000 | SW846 8260B | CW | 9/22/2015 |
| 2-Methylnaphthalene | **30000** | ug/Kg | 5000 | SW846 8260B | CW | 9/22/2015 |
| MTBE | **<1000** | ug/Kg | 1000 | SW846 8260B | CW | 9/22/2015 |
| Naphthalene | **20000** | ug/Kg | 5000 | SW846 8260B | CW | 9/22/2015 |
| n-Propylbenzene | **26000** | ug/Kg | 1000 | SW846 8260B | CW | 9/22/2015 |
| Toluene | **28000** | ug/Kg | 1000 | SW846 8260B | CW | 9/22/2015 |
| 1,2,3-Trimethylbenzene | **35000** | ug/Kg | 1000 | SW846 8260B | CW | 9/22/2015 |
| 1,2,4-Trimethylbenzene | **120000** | ug/Kg | 1000 | SW846 8260B | CW | 9/22/2015 |
| 1,3,5-Trimethylbenzene | **40000** | ug/Kg | 1000 | SW846 8260B | CW | 9/22/2015 |
| Xylenes(total) | **200000** | ug/Kg | 3000 | SW846 8260B | CW | 9/22/2015 |
| EPA Method 5035 Methanol Preserv | **Extracted** | | | EPA 5035 | PME | 9/15/2015 |
| %Solid | **88** | % | | ASTM D2216 | HD | 9/21/2015 |

All soil results based on dry weight.

DL=Reported detection limit for analytical method requested. Some compounds require special analytical methods to achieve MDNR designated target detection limits (TDL).

Released by: [signature]

Date: 24 Sept 2015

Elevated volatile & GRO dl due to sample matrix.

Brighton Analytical L.L.C.™

**Brighton Analytical, L.L.C.**
**2105 Pless Drive**
**Brighton, Michigan 48116**
**Phone: (810) 229-7575 FAX: (810) 229-8650**
e-mail: bai-brighton@sbcglobal.net

To: PM Environmental, Inc.
4080 W. 11 Mile Rd.
Berkley, MI 48072

Sample Date: 9/15/2015
Submit Date: 9/21/2015
Report Date: 9/24/2015

BA Report Number: **36031**
BA Sample ID: **CB09955**

Project Name: **Beacon and Bridge #8**
Project Number: **01-4982-0-002**
Sample ID: **SB-13 19'-20'**

| Parameters | Results | Units | DL | Method Reference | Analyst | Analysis Date |
|---|---|---|---|---|---|---|
| **GRO Analysis** | | | | | | |
| GRO (Methanol Preserved) | **<4000** | ug/Kg | 4000 | SW846 8015 | BY | 9/22/2015 |
| **Volatile Analysis(Methanol Preserved)** | | | | | | |
| Benzene | **<50** | ug/Kg | 50 | SW846 8260B | CW | 9/22/2015 |
| 1,2-Dibromoethane(Ethylene Dibromide) | **<20** | ug/Kg | 20 | SW846 8260B | CW | 9/22/2015 |
| 1,2-Dichloroethane | **<50** | ug/Kg | 50 | SW846 8260B | CW | 9/22/2015 |
| Ethanol (Ethyl alcohol) | **<2500** | ug/Kg | 2500 | SW846 8260B | CW | 9/22/2015 |
| Ethylbenzene | **<50** | ug/Kg | 50 | SW846 8260B | CW | 9/22/2015 |
| Isopropylbenzene | **<50** | ug/Kg | 50 | SW846 8260B | CW | 9/22/2015 |
| 2-Methylnaphthalene | **290** | ug/Kg | 250 | SW846 8260B | CW | 9/22/2015 |
| MTBE | **<50** | ug/Kg | 50 | SW846 8260B | CW | 9/22/2015 |
| Naphthalene | **<250** | ug/Kg | 250 | SW846 8260B | CW | 9/22/2015 |
| n-Propylbenzene | **<50** | ug/Kg | 50 | SW846 8260B | CW | 9/22/2015 |
| Toluene | **<50** | ug/Kg | 50 | SW846 8260B | CW | 9/22/2015 |
| 1,2,3-Trimethylbenzene | **<50** | ug/Kg | 50 | SW846 8260B | CW | 9/22/2015 |
| 1,2,4-Trimethylbenzene | **110** | ug/Kg | 50 | SW846 8260B | CW | 9/22/2015 |
| 1,3,5-Trimethylbenzene | **<50** | ug/Kg | 50 | SW846 8260B | CW | 9/22/2015 |
| Xylenes(total) | **190** | ug/Kg | 150 | SW846 8260B | CW | 9/22/2015 |
| EPA Method 5035 Methanol Preserv | **Extracted** | | | EPA 5035 | PME | 9/15/2015 |
| %Solid | **88** | % | | ASTM D2216 | HD | 9/21/2015 |

All soil results based on dry weight.

DL=Reported detection limit for analytical method requested. Some compounds require special analytical methods to achieve MDNR designated target detection limits (TDL).

Released by: [signature]

Date: 24 Sept 2015

Brighton Analytical, L.L.C.
2105 Pless Drive
Brighton, Michigan 48116
Phone: (810) 229-7575 FAX: (810) 229-8650
e-mail: bai-brighton@sbcglobal.net

Sample Date: 9/14/2015
Submit Date: 9/21/2015
Report Date: 9/24/2015

To: PM Environmental, Inc.
4080 W. 11 Mile Rd.
Berkley, MI 48072

BA Report Number: **36031**
BA Sample ID: **CB09956**

Project Name: **Beacon and Bridge #8**
Project Number: **01-4982-0-002**
Sample ID: **SB-14 7'-8'**

| Parameters | Results | Units | DL | Method Reference | Analyst | Analysis Date |
|---|---|---|---|---|---|---|
| **GRO Analysis** | | | | | | |
| GRO (Methanol Preserved) | **52000** | ug/Kg | 4000 | SW846 8015 | BY | 9/23/2015 |
| **Volatile Analysis(Methanol Preserved)** | | | | | | |
| Benzene | **260** | ug/Kg | 50 | SW846 8260B | CW | 9/22/2015 |
| 1,2-Dibromoethane(Ethylene Dibromide) | **<20** | ug/Kg | 20 | SW846 8260B | CW | 9/22/2015 |
| 1,2-Dichloroethane | **<50** | ug/Kg | 50 | SW846 8260B | CW | 9/22/2015 |
| Ethanol (Ethyl alcohol) | **<2500** | ug/Kg | 2500 | SW846 8260B | CW | 9/22/2015 |
| Ethylbenzene | **1900** | ug/Kg | 50 | SW846 8260B | CW | 9/22/2015 |
| Isopropylbenzene | **220** | ug/Kg | 50 | SW846 8260B | CW | 9/22/2015 |
| 2-Methylnaphthalene | **3200** | ug/Kg | 250 | SW846 8260B | CW | 9/22/2015 |
| MTBE | **<50** | ug/Kg | 50 | SW846 8260B | CW | 9/22/2015 |
| Naphthalene | **1900** | ug/Kg | 250 | SW846 8260B | CW | 9/22/2015 |
| n-Propylbenzene | **990** | ug/Kg | 50 | SW846 8260B | CW | 9/22/2015 |
| Toluene | **2500** | ug/Kg | 50 | SW846 8260B | CW | 9/22/2015 |
| 1,2,3-Trimethylbenzene | **2400** | ug/Kg | 50 | SW846 8260B | CW | 9/22/2015 |
| 1,2,4-Trimethylbenzene | **7100** | ug/Kg | 50 | SW846 8260B | CW | 9/22/2015 |
| 1,3,5-Trimethylbenzene | **2000** | ug/Kg | 50 | SW846 8260B | CW | 9/22/2015 |
| Xylenes(total) | **11000** | ug/Kg | 150 | SW846 8260B | CW | 9/22/2015 |
| EPA Method 5035 Methanol Preserv | **Extracted** | | | EPA 5035 | PME | 9/14/2015 |
| %Solid | **91** | % | | ASTM D2216 | HD | 9/21/2015 |

All soil results based on dry weight.

DL=Reported detection limit for analytical method requested. Some compounds require special analytical methods to achieve MDNR designated target detection limits (TDL).

Released by: Stanley M Smith

Date: 24 Sept 2015

Brighton Analytical, L.L.C.™

**Brighton Analytical, L.L.C.**
**2105 Pless Drive**
**Brighton, Michigan 48116**
**Phone: (810) 229-7575 FAX: (810) 229-8650**
e-mail: bai-brighton@sbcglobal.net

Sample Date: 9/14/2015
Submit Date: 9/21/2015
Report Date: 9/24/2015

To: PM Environmental, Inc.
4080 W. 11 Mile Rd.
Berkley, MI 48072

BA Report Number: **36031**
BA Sample ID: **CB09957**

Project Name: **Beacon and Bridge #8**
Project Number: **01-4982-0-002**
Sample ID: **SB-14 9'-10'**

| Parameters | Results | Units | DL | Method Reference | Analyst | Analysis Date |
|---|---|---|---|---|---|---|
| **GRO Analysis** | | | | | | |
| GRO (Methanol Preserved) | **2100000** | ug/Kg | 104000 | SW846 8015 | BY | 9/23/2015 |
| **Volatile Analysis(Methanol Preserved)** | | | | | | |
| Benzene | **2900** | ug/Kg | 1000 | SW846 8260B | CW | 9/22/2015 |
| 1,2-Dibromoethane(Ethylene Dibromide) | **<400** | ug/Kg | 400 | SW846 8260B | CW | 9/22/2015 |
| 1,2-Dichloroethane | **<1000** | ug/Kg | 1000 | SW846 8260B | CW | 9/22/2015 |
| Ethanol (Ethyl alcohol) | **<50000** | ug/Kg | 50000 | SW846 8260B | CW | 9/22/2015 |
| Ethylbenzene | **53000** | ug/Kg | 1000 | SW846 8260B | CW | 9/22/2015 |
| Isopropylbenzene | **6700** | ug/Kg | 1000 | SW846 8260B | CW | 9/22/2015 |
| 2-Methylnaphthalene | **46000** | ug/Kg | 5000 | SW846 8260B | CW | 9/22/2015 |
| MTBE | **<1000** | ug/Kg | 1000 | SW846 8260B | CW | 9/22/2015 |
| Naphthalene | **29000** | ug/Kg | 5000 | SW846 8260B | CW | 9/22/2015 |
| n-Propylbenzene | **29000** | ug/Kg | 1000 | SW846 8260B | CW | 9/22/2015 |
| Toluene | **60000** | ug/Kg | 1000 | SW846 8260B | CW | 9/22/2015 |
| 1,2,3-Trimethylbenzene | **62000** | ug/Kg | 1000 | SW846 8260B | CW | 9/22/2015 |
| 1,2,4-Trimethylbenzene | **190000** | ug/Kg | 1000 | SW846 8260B | CW | 9/22/2015 |
| 1,3,5-Trimethylbenzene | **55000** | ug/Kg | 1000 | SW846 8260B | CW | 9/22/2015 |
| Xylenes(total) | **290000** | ug/Kg | 3000 | SW846 8260B | CW | 9/22/2015 |
| EPA Method 5035 Methanol Preserv | **Extracted** | | | EPA 5035 | PME | 9/14/2015 |
| %Solid | **91** | % | | ASTM D2216 | HD | 9/21/2015 |

All soil results based on dry weight.

DL=Reported detection limit for analytical method requested. Some compounds require special analytical methods to achieve MDNR designated target detection limits (TDL).

Released by: Steve Miller

Date: 24 Sept 2015

Elevated GRO & volatile dl due to sample matrix.

**Brighton Analytical, L.L.C.**
**2105 Pless Drive**
**Brighton, Michigan 48116**
**Phone: (810) 229-7575 FAX: (810) 229-8650**
e-mail: bai-brighton@sbcglobal.net

To: PM Environmental, Inc.
4080 W. 11 Mile Rd.
Berkley, MI 48072

Sample Date: 9/14/2015
Submit Date: 9/21/2015
Report Date: 9/24/2015

BA Report Number: **36031**
BA Sample ID: **CB09958**

Project Name: **Beacon and Bridge #8**
Project Number: **01-4982-0-002**
Sample ID: **SB-14 14'-15'**

| Parameters | Results | Units | DL | Method Reference | Analyst | Analysis Date |
|---|---|---|---|---|---|---|
| **GRO Analysis** | | | | | | |
| GRO (Methanol Preserved) | <4000 | ug/Kg | 4000 | SW846 8015 | BY | 9/23/2015 |
| **Volatile Analysis(Methanol Preserved)** | | | | | | |
| Benzene | <50 | ug/Kg | 50 | SW846 8260B | CW | 9/22/2015 |
| 1,2-Dibromoethane(Ethylene Dibromide) | <20 | ug/Kg | 20 | SW846 8260B | CW | 9/22/2015 |
| 1,2-Dichloroethane | <50 | ug/Kg | 50 | SW846 8260B | CW | 9/22/2015 |
| Ethanol (Ethyl alcohol) | <2500 | ug/Kg | 2500 | SW846 8260B | CW | 9/22/2015 |
| Ethylbenzene | <50 | ug/Kg | 50 | SW846 8260B | CW | 9/22/2015 |
| Isopropylbenzene | <50 | ug/Kg | 50 | SW846 8260B | CW | 9/22/2015 |
| 2-Methylnaphthalene | <250 | ug/Kg | 250 | SW846 8260B | CW | 9/22/2015 |
| MTBE | <50 | ug/Kg | 50 | SW846 8260B | CW | 9/22/2015 |
| Naphthalene | <250 | ug/Kg | 250 | SW846 8260B | CW | 9/22/2015 |
| n-Propylbenzene | <50 | ug/Kg | 50 | SW846 8260B | CW | 9/22/2015 |
| Toluene | <50 | ug/Kg | 50 | SW846 8260B | CW | 9/22/2015 |
| 1,2,3-Trimethylbenzene | <50 | ug/Kg | 50 | SW846 8260B | CW | 9/22/2015 |
| 1,2,4-Trimethylbenzene | <50 | ug/Kg | 50 | SW846 8260B | CW | 9/22/2015 |
| 1,3,5-Trimethylbenzene | <50 | ug/Kg | 50 | SW846 8260B | CW | 9/22/2015 |
| Xylenes(total) | <150 | ug/Kg | 150 | SW846 8260B | CW | 9/22/2015 |
| EPA Method 5035 Methanol Preserv | **Extracted** | | | EPA 5035 | PME | 9/14/2015 |
| %Solid | **83** | % | | ASTM D2216 | HD | 9/21/2015 |

All soil results based on dry weight.

DL=Reported detection limit for analytical method requested. Some compounds require special analytical methods to achieve MDNR designated target detection limits (TDL).

Released by:

Date: 24 Sept 2015

Brighton Analytical, L.L.C.™

**Brighton Analytical, L.L.C.**
**2105 Pless Drive**
**Brighton, Michigan 48116**
**Phone: (810) 229-7575 FAX: (810) 229-8650**
e-mail: bai-brighton@sbcglobal.net

Sample Date: 9/14/2015
Submit Date: 9/21/2015
Report Date: 9/24/2015

To: PM Environmental, Inc.
4080 W. 11 Mile Rd.
Berkley, MI 48072

BA Report Number: **36031**
BA Sample ID: **CB09959**

Project Name: **Beacon and Bridge #8**
Project Number: **01-4982-0-002**
Sample ID: **SB-15 2'-3'**

| Parameters | Results | Units | DL | Method Reference | Analyst | Analysis Date |
|---|---|---|---|---|---|---|
| **GRO Analysis** | | | | | | |
| GRO (Methanol Preserved) | **4000** | ug/Kg | 4000 | SW846 8015 | BY | 9/23/2015 |
| **Volatile Analysis(Methanol Preserved)** | | | | | | |
| Benzene | **130** | ug/Kg | 50 | SW846 8260B | CW | 9/22/2015 |
| 1,2-Dibromoethane(Ethylene Dibromide) | **<20** | ug/Kg | 20 | SW846 8260B | CW | 9/22/2015 |
| 1,2-Dichloroethane | **<50** | ug/Kg | 50 | SW846 8260B | CW | 9/22/2015 |
| Ethanol (Ethyl alcohol) | **<2500** | ug/Kg | 2500 | SW846 8260B | CW | 9/22/2015 |
| Ethylbenzene | **200** | ug/Kg | 50 | SW846 8260B | CW | 9/22/2015 |
| Isopropylbenzene | **<50** | ug/Kg | 50 | SW846 8260B | CW | 9/22/2015 |
| 2-Methylnaphthalene | **<250** | ug/Kg | 250 | SW846 8260B | CW | 9/22/2015 |
| MTBE | **<50** | ug/Kg | 50 | SW846 8260B | CW | 9/22/2015 |
| Naphthalene | **<250** | ug/Kg | 250 | SW846 8260B | CW | 9/22/2015 |
| n-Propylbenzene | **62** | ug/Kg | 50 | SW846 8260B | CW | 9/22/2015 |
| Toluene | **180** | ug/Kg | 50 | SW846 8260B | CW | 9/22/2015 |
| 1,2,3-Trimethylbenzene | **53** | ug/Kg | 50 | SW846 8260B | CW | 9/22/2015 |
| 1,2,4-Trimethylbenzene | **230** | ug/Kg | 50 | SW846 8260B | CW | 9/22/2015 |
| 1,3,5-Trimethylbenzene | **67** | ug/Kg | 50 | SW846 8260B | CW | 9/22/2015 |
| Xylenes(total) | **610** | ug/Kg | 150 | SW846 8260B | CW | 9/22/2015 |
| EPA Method 5035 Methanol Preserv | **Extracted** | | | EPA 5035 | PME | 9/14/2015 |
| %Solid | **90** | % | | ASTM D2216 | HD | 9/21/2015 |

All soil results based on dry weight.

DL=Reported detection limit for analytical method requested. Some compounds require special analytical methods to achieve MDNR designated target detection limits (TDL).

Released by: Stanley M Smith

Date: 24 Sept 2015

**Brighton Analytical, L.L.C.**
**2105 Pless Drive**
**Brighton, Michigan 48116**
**Phone: (810) 229-7575 FAX: (810) 229-8650**
e-mail: bai-brighton@sbcglobal.net

Sample Date: 9/14/2015
Submit Date: 9/21/2015
Report Date: 9/24/2015

To: PM Environmental, Inc.
4080 W. 11 Mile Rd.
Berkley, MI 48072

BA Report Number: **36031**
BA Sample ID: **CB09960**

Project Name: **Beacon and Bridge #8**
Project Number: **01-4982-0-002**
Sample ID: **SB-15 8'-9'**

| Parameters | Results | Units | DL | Method Reference | Analyst | Analysis Date |
|---|---|---|---|---|---|---|
| **GRO Analysis** | | | | | | |
| GRO (Methanol Preserved) | **4300000** | ug/Kg | 248000 | SW846 8015 | BY | 9/23/2015 |
| **Volatile Analysis(Methanol Preserved)** | | | | | | |
| Benzene | **16000** | ug/Kg | 15000 | SW846 8260B | CW | 9/23/2015 |
| 1,2-Dibromoethane(Ethylene Dibromide) | **<6000** | ug/Kg | 6000 | SW846 8260B | CW | 9/23/2015 |
| 1,2-Dichloroethane | **<15000** | ug/Kg | 15000 | SW846 8260B | CW | 9/23/2015 |
| Ethanol (Ethyl alcohol) | **<750000** | ug/Kg | 750000 | SW846 8260B | CW | 9/23/2015 |
| Ethylbenzene | **130000** | ug/Kg | 15000 | SW846 8260B | CW | 9/23/2015 |
| Isopropylbenzene | **15000** | ug/Kg | 15000 | SW846 8260B | CW | 9/23/2015 |
| 2-Methylnaphthalene | **150000** | ug/Kg | 75000 | SW846 8260B | CW | 9/23/2015 |
| MTBE | **<15000** | ug/Kg | 15000 | SW846 8260B | CW | 9/23/2015 |
| Naphthalene | **<75000** | ug/Kg | 75000 | SW846 8260B | CW | 9/23/2015 |
| n-Propylbenzene | **59000** | ug/Kg | 15000 | SW846 8260B | CW | 9/23/2015 |
| Toluene | **230000** | ug/Kg | 15000 | SW846 8260B | CW | 9/23/2015 |
| 1,2,3-Trimethylbenzene | **110000** | ug/Kg | 15000 | SW846 8260B | CW | 9/23/2015 |
| 1,2,4-Trimethylbenzene | **370000** | ug/Kg | 15000 | SW846 8260B | CW | 9/23/2015 |
| 1,3,5-Trimethylbenzene | **110000** | ug/Kg | 15000 | SW846 8260B | CW | 9/23/2015 |
| Xylenes(total) | **670000** | ug/Kg | 45000 | SW846 8260B | CW | 9/23/2015 |
| EPA Method 5035 Methanol Preserv | **Extracted** | | | EPA 5035 | PME | 9/14/2015 |
| %Solid | **88** | % | | ASTM D2216 | HD | 9/21/2015 |

All soil results based on dry weight.

DL=Reported detection limit for analytical method requested. Some compounds require special analytical methods to achieve MDNR designated target detection limits (TDL).

Released by: Stanley M Smith
Date: 24 Sept 2015

Elevated volatile & GRO dl due to sample matrix.

Brighton Analytical L.L.C.™

**Brighton Analytical, L.L.C.**
**2105 Pless Drive**
**Brighton, Michigan 48116**
**Phone: (810) 229-7575 FAX: (810) 229-8650**
e-mail: bai-brighton@sbcglobal.net

Sample Date: 9/14/2015
Submit Date: 9/21/2015
Report Date: 9/24/2015

To: PM Environmental, Inc.
4080 W. 11 Mile Rd.
Berkley, MI 48072

BA Report Number: **36031**
BA Sample ID: **CB09961**

Project Name: **Beacon and Bridge #8**
Project Number: **01-4982-0-002**
Sample ID: **SB-15 19'-20'**

| Parameters | Results | Units | DL | Method Reference | Analyst | Analysis Date |
|---|---|---|---|---|---|---|
| **GRO Analysis** | | | | | | |
| GRO (Methanol Preserved) | <4000 | ug/Kg | 4000 | SW846 8015 | BY | 9/23/2015 |
| **Volatile Analysis(Methanol Preserved)** | | | | | | |
| Benzene | **<50** | ug/Kg | 50 | SW846 8260B | CW | 9/22/2015 |
| 1,2-Dibromoethane(Ethylene Dibromide) | **<20** | ug/Kg | 20 | SW846 8260B | CW | 9/22/2015 |
| 1,2-Dichloroethane | **<50** | ug/Kg | 50 | SW846 8260B | CW | 9/22/2015 |
| Ethanol (Ethyl alcohol) | **<2500** | ug/Kg | 2500 | SW846 8260B | CW | 9/22/2015 |
| Ethylbenzene | **<50** | ug/Kg | 50 | SW846 8260B | CW | 9/22/2015 |
| Isopropylbenzene | **<50** | ug/Kg | 50 | SW846 8260B | CW | 9/22/2015 |
| 2-Methylnaphthalene | **<250** | ug/Kg | 250 | SW846 8260B | CW | 9/22/2015 |
| MTBE | **<50** | ug/Kg | 50 | SW846 8260B | CW | 9/22/2015 |
| Naphthalene | **<250** | ug/Kg | 250 | SW846 8260B | CW | 9/22/2015 |
| n-Propylbenzene | **<50** | ug/Kg | 50 | SW846 8260B | CW | 9/22/2015 |
| Toluene | **<50** | ug/Kg | 50 | SW846 8260B | CW | 9/22/2015 |
| 1,2,3-Trimethylbenzene | **<50** | ug/Kg | 50 | SW846 8260B | CW | 9/22/2015 |
| 1,2,4-Trimethylbenzene | **100** | ug/Kg | 50 | SW846 8260B | CW | 9/22/2015 |
| 1,3,5-Trimethylbenzene | **<50** | ug/Kg | 50 | SW846 8260B | CW | 9/22/2015 |
| Xylenes(total) | **<150** | ug/Kg | 150 | SW846 8260B | CW | 9/22/2015 |
| EPA Method 5035 Methanol Preserv | **Extracted** | | | EPA 5035 | PME | 9/14/2015 |
| %Solid | **88** | % | | ASTM D2216 | HD | 9/21/2015 |

All soil results based on dry weight.

DL=Reported detection limit for analytical method requested. Some compounds require special analytical methods to achieve MDNR designated target detection limits (TDL).

Released by: Stanley M Smith

Date: 24 Sept 2015

**Brighton Analytical, L.L.C.**
**2105 Pless Drive**
**Brighton, Michigan 48116**
**Phone: (810) 229-7575 FAX: (810) 229-8650**
e-mail: bai-brighton@sbcglobal.net

Sample Date: 9/14/2015
Submit Date: 9/21/2015
Report Date: 9/24/2015

To: PM Environmental, Inc.
4080 W. 11 Mile Rd.
Berkley, MI 48072

BA Report Number: **36031**
BA Sample ID: **CB09962**

Project Name: **Beacon and Bridge #8**
Project Number: **01-4982-0-002**
Sample ID: **SB-16 6'-7'**

| Parameters | Results | Units | DL | Method Reference | Analyst | Analysis Date |
|---|---|---|---|---|---|---|
| **GRO Analysis** | | | | | | |
| GRO (Methanol Preserved) | <4000 | ug/Kg | 4000 | SW846 8015 | BY | 9/23/2015 |
| **Volatile Analysis(Methanol Preserved)** | | | | | | |
| Benzene | 200 | ug/Kg | 50 | SW846 8260B | CW | 9/22/2015 |
| 1,2-Dibromoethane(Ethylene Dibromide) | <20 | ug/Kg | 20 | SW846 8260B | CW | 9/22/2015 |
| 1,2-Dichloroethane | <50 | ug/Kg | 50 | SW846 8260B | CW | 9/22/2015 |
| Ethanol (Ethyl alcohol) | <2500 | ug/Kg | 2500 | SW846 8260B | CW | 9/22/2015 |
| Ethylbenzene | <50 | ug/Kg | 50 | SW846 8260B | CW | 9/22/2015 |
| Isopropylbenzene | <50 | ug/Kg | 50 | SW846 8260B | CW | 9/22/2015 |
| 2-Methylnaphthalene | <250 | ug/Kg | 250 | SW846 8260B | CW | 9/22/2015 |
| MTBE | <50 | ug/Kg | 50 | SW846 8260B | CW | 9/22/2015 |
| Naphthalene | <250 | ug/Kg | 250 | SW846 8260B | CW | 9/22/2015 |
| n-Propylbenzene | <50 | ug/Kg | 50 | SW846 8260B | CW | 9/22/2015 |
| Toluene | <50 | ug/Kg | 50 | SW846 8260B | CW | 9/22/2015 |
| 1,2,3-Trimethylbenzene | <50 | ug/Kg | 50 | SW846 8260B | CW | 9/22/2015 |
| 1,2,4-Trimethylbenzene | <50 | ug/Kg | 50 | SW846 8260B | CW | 9/22/2015 |
| 1,3,5-Trimethylbenzene | <50 | ug/Kg | 50 | SW846 8260B | CW | 9/22/2015 |
| Xylenes(total) | 260 | ug/Kg | 150 | SW846 8260B | CW | 9/22/2015 |
| EPA Method 5035 Methanol Preserv | **Extracted** | | | EPA 5035 | PME | 9/14/2015 |
| %Solid | 89 | % | | ASTM D2216 | HD | 9/21/2015 |

All soil results based on dry weight.

DL=Reported detection limit for analytical method requested. Some compounds require special analytical methods to achieve MDNR designated target detection limits (TDL).

Released by: Stanley M Smith

Date: 24 Sept 2015

Brighton Analytical L.L.C.™

**Brighton Analytical, L.L.C.**
**2105 Pless Drive**
**Brighton, Michigan 48116**
**Phone: (810) 229-7575 FAX: (810) 229-8650**
e-mail: bai-brighton@sbcglobal.net

To: PM Environmental, Inc.
4080 W. 11 Mile Rd.
Berkley, MI 48072

Sample Date: 9/15/2015
Submit Date: 9/21/2015
Report Date: 9/24/2015

BA Report Number: **36031**
BA Sample ID: **CB09963**

Project Name: **Beacon and Bridge #8**
Project Number: **01-4982-0-002**
Sample ID: **SB-16 12'-13'**

| Parameters | Results | Units | DL | Method Reference | Analyst | Analysis Date |
|---|---|---|---|---|---|---|
| **GRO Analysis** | | | | | | |
| GRO (Methanol Preserved) | **<4000** | ug/Kg | 4000 | SW846 8015 | BY | 9/23/2015 |
| **Volatile Analysis(Methanol Preserved)** | | | | | | |
| Benzene | **54** | ug/Kg | 50 | SW846 8260B | CW | 9/22/2015 |
| 1,2-Dibromoethane(Ethylene Dibromide) | **<20** | ug/Kg | 20 | SW846 8260B | CW | 9/22/2015 |
| 1,2-Dichloroethane | **<50** | ug/Kg | 50 | SW846 8260B | CW | 9/22/2015 |
| Ethanol (Ethyl alcohol) | **<2500** | ug/Kg | 2500 | SW846 8260B | CW | 9/22/2015 |
| Ethylbenzene | **<50** | ug/Kg | 50 | SW846 8260B | CW | 9/22/2015 |
| Isopropylbenzene | **<50** | ug/Kg | 50 | SW846 8260B | CW | 9/22/2015 |
| 2-Methylnaphthalene | **<250** | ug/Kg | 250 | SW846 8260B | CW | 9/22/2015 |
| MTBE | **<50** | ug/Kg | 50 | SW846 8260B | CW | 9/22/2015 |
| Naphthalene | **<250** | ug/Kg | 250 | SW846 8260B | CW | 9/22/2015 |
| n-Propylbenzene | **<50** | ug/Kg | 50 | SW846 8260B | CW | 9/22/2015 |
| Toluene | **<50** | ug/Kg | 50 | SW846 8260B | CW | 9/22/2015 |
| 1,2,3-Trimethylbenzene | **<50** | ug/Kg | 50 | SW846 8260B | CW | 9/22/2015 |
| 1,2,4-Trimethylbenzene | **<50** | ug/Kg | 50 | SW846 8260B | CW | 9/22/2015 |
| 1,3,5-Trimethylbenzene | **<50** | ug/Kg | 50 | SW846 8260B | CW | 9/22/2015 |
| Xylenes(total) | **<150** | ug/Kg | 150 | SW846 8260B | CW | 9/22/2015 |
| EPA Method 5035 Methanol Preserv | **Extracted** | | | EPA 5035 | PME | 9/15/2015 |
| %Solid | **91** | % | | ASTM D2216 | HD | 9/21/2015 |

All soil results based on dry weight.

DL=Reported detection limit for analytical method requested. Some compounds require special analytical methods to achieve MDNR designated target detection limits (TDL).

Released by: Stanley M. Sitter

Date: 24 Sept 2015

Brighton Analytical L.L.C.™

**Brighton Analytical, L.L.C.**
**2105 Pless Drive**
**Brighton, Michigan 48116**
**Phone: (810) 229-7575 FAX: (810) 229-8650**
e-mail: bai-brighton@sbcglobal.net

To: PM Environmental, Inc.
4080 W. 11 Mile Rd.
Berkley, MI 48072

Sample Date: 9/14/2015
Submit Date: 9/21/2015
Report Date: 9/24/2015

BA Report Number: **36031**
BA Sample ID: **CB09964**

Project Name: **Beacon and Bridge #8**
Project Number: **01-4982-0-002**
Sample ID: **SB-17 6'-7'**

| Parameters | Results | Units | DL | Method Reference | Analyst | Analysis Date |
|---|---|---|---|---|---|---|
| **GRO Analysis** | | | | | | |
| GRO (Methanol Preserved) | <4000 | ug/Kg | 4000 | SW846 8015 | BY | 9/23/2015 |
| **Volatile Analysis(Methanol Preserved)** | | | | | | |
| Benzene | <50 | ug/Kg | 50 | SW846 8260B | CW | 9/22/2015 |
| 1,2-Dibromoethane(Ethylene Dibromide) | <20 | ug/Kg | 20 | SW846 8260B | CW | 9/22/2015 |
| 1,2-Dichloroethane | <50 | ug/Kg | 50 | SW846 8260B | CW | 9/22/2015 |
| Ethanol (Ethyl alcohol) | <2500 | ug/Kg | 2500 | SW846 8260B | CW | 9/22/2015 |
| Ethylbenzene | <50 | ug/Kg | 50 | SW846 8260B | CW | 9/22/2015 |
| Isopropylbenzene | <50 | ug/Kg | 50 | SW846 8260B | CW | 9/22/2015 |
| 2-Methylnaphthalene | <250 | ug/Kg | 250 | SW846 8260B | CW | 9/22/2015 |
| MTBE | <50 | ug/Kg | 50 | SW846 8260B | CW | 9/22/2015 |
| Naphthalene | <250 | ug/Kg | 250 | SW846 8260B | CW | 9/22/2015 |
| n-Propylbenzene | <50 | ug/Kg | 50 | SW846 8260B | CW | 9/22/2015 |
| Toluene | <50 | ug/Kg | 50 | SW846 8260B | CW | 9/22/2015 |
| 1,2,3-Trimethylbenzene | <50 | ug/Kg | 50 | SW846 8260B | CW | 9/22/2015 |
| 1,2,4-Trimethylbenzene | <50 | ug/Kg | 50 | SW846 8260B | CW | 9/22/2015 |
| 1,3,5-Trimethylbenzene | <50 | ug/Kg | 50 | SW846 8260B | CW | 9/22/2015 |
| Xylenes(total) | <150 | ug/Kg | 150 | SW846 8260B | CW | 9/22/2015 |
| EPA Method 5035 Methanol Preserv | Extracted | | | EPA 5035 | PME | 9/14/2015 |
| %Solid | 80 | % | | ASTM D2216 | HD | 9/21/2015 |

All soil results based on dry weight.

DL=Reported detection limit for analytical method requested. Some compounds require special analytical methods to achieve MDNR designated target detection limits (TDL).

Released by: Stanley M Smith

Date: 24 Sept 2015

**Brighton Analytical, L.L.C.**
**2105 Pless Drive**
**Brighton, Michigan 48116**
**Phone: (810) 229-7575 FAX: (810) 229-8650**
e-mail: bai-brighton@sbcglobal.net

Sample Date: 9/16/2015
Submit Date: 9/21/2015
Report Date: 9/24/2015

To: PM Environmental, Inc.
4080 W. 11 Mile Rd.
Berkley, MI 48072

BA Report Number: **36031**
BA Sample ID: **CB09965**

Project Name: **Beacon and Bridge #8**
Project Number: **01-4982-0-002**
Sample ID: **SB-18 7'-8'**

| Parameters | Results | Units | DL | Method Reference | Analyst | Analysis Date |
|---|---|---|---|---|---|---|
| **GRO Analysis** | | | | | | |
| GRO (Methanol Preserved) | <4000 | ug/Kg | 4000 | SW846 8015 | BY | 9/23/2015 |
| **Volatile Analysis(Methanol Preserved)** | | | | | | |
| Benzene | <50 | ug/Kg | 50 | SW846 8260B | CW | 9/22/2015 |
| 1,2-Dibromoethane(Ethylene Dibromide) | <20 | ug/Kg | 20 | SW846 8260B | CW | 9/22/2015 |
| 1,2-Dichloroethane | <50 | ug/Kg | 50 | SW846 8260B | CW | 9/22/2015 |
| Ethanol (Ethyl alcohol) | <2500 | ug/Kg | 2500 | SW846 8260B | CW | 9/22/2015 |
| Ethylbenzene | <50 | ug/Kg | 50 | SW846 8260B | CW | 9/22/2015 |
| Isopropylbenzene | <50 | ug/Kg | 50 | SW846 8260B | CW | 9/22/2015 |
| 2-Methylnaphthalene | <250 | ug/Kg | 250 | SW846 8260B | CW | 9/22/2015 |
| MTBE | <50 | ug/Kg | 50 | SW846 8260B | CW | 9/22/2015 |
| Naphthalene | <250 | ug/Kg | 250 | SW846 8260B | CW | 9/22/2015 |
| n-Propylbenzene | <50 | ug/Kg | 50 | SW846 8260B | CW | 9/22/2015 |
| Toluene | <50 | ug/Kg | 50 | SW846 8260B | CW | 9/22/2015 |
| 1,2,3-Trimethylbenzene | <50 | ug/Kg | 50 | SW846 8260B | CW | 9/22/2015 |
| 1,2,4-Trimethylbenzene | <50 | ug/Kg | 50 | SW846 8260B | CW | 9/22/2015 |
| 1,3,5-Trimethylbenzene | <50 | ug/Kg | 50 | SW846 8260B | CW | 9/22/2015 |
| Xylenes(total) | <150 | ug/Kg | 150 | SW846 8260B | CW | 9/22/2015 |
| EPA Method 5035 Methanol Preserv | **Extracted** | | | EPA 5035 | PME | 9/16/2015 |
| %Solid | 95 | % | | ASTM D2216 | HD | 9/21/2015 |

All soil results based on dry weight.

DL=Reported detection limit for analytical method requested. Some compounds require special analytical methods to achieve MDNR designated target detection limits (TDL).

Released by: Stanley M. Smith

Date: 24 Sept 2015

Brighton Analytical L.L.C.™

**Brighton Analytical, L.L.C.**
**2105 Pless Drive**
**Brighton, Michigan 48116**
**Phone: (810) 229-7575 FAX: (810) 229-8650**
e-mail: bai-brighton@sbcglobal.net

Sample Date: 9/16/2015
Submit Date: 9/21/2015
Report Date: 9/24/2015

To: PM Environmental, Inc.
4080 W. 11 Mile Rd.
Berkley, MI 48072

BA Report Number: **36031**
BA Sample ID: **CB09966**

Project Name: **Beacon and Bridge #8**
Project Number: **01-4982-0-002**
Sample ID: **SB-18 7'-8' MS**

| Parameters | Results | Units | DL | Method Reference | Analyst | Analysis Date |
|---|---|---|---|---|---|---|
| **GRO Analysis** | | | | | | |
| GRO (Methanol Preserved) | **92%** | ug/Kg | | SW846 8015 | BY | 9/23/2015 |
| **Volatile Analysis** | | | | | | |
| Carbon tetrachloride | **93** | % | | 8260B/624 | CW | 9/22/2015 |
| Chlorobenzene | **87** | % | | 8260B/624 | CW | 9/22/2015 |
| Chloroform | **88** | % | | 8260B/624 | CW | 9/22/2015 |
| cis-1,3-Dichloropropene | **80** | % | | 8260B/624 | CW | 9/22/2015 |
| Dibromochloromethane | **87** | % | | 8260B/624 | CW | 9/22/2015 |
| 1,2-Dichlorobenzene | **86** | % | | 8260B/624 | CW | 9/22/2015 |
| 1,3-Dichlorobenzene | **83** | % | | 8260B/624 | CW | 9/22/2015 |
| 1,4-Dichlorobenzene | **83** | % | | 8260B/624 | CW | 9/22/2015 |
| 1,1-Dichloroethane | **88** | % | | 8260B/624 | CW | 9/22/2015 |
| 1,2-Dichloroethane | **88** | % | | 8260B/624 | CW | 9/22/2015 |
| 1,1-Dichloroethene | **98** | % | | 8260B/624 | CW | 9/22/2015 |
| 1,2-Dichloropropane | **92** | % | | 8260B/624 | CW | 9/22/2015 |
| Tetrachloroethane | **86** | % | | 8260B/624 | CW | 9/22/2015 |
| 1,1,2,2-Tetrachloroethane | **82** | % | | 8260B/624 | CW | 9/22/2015 |
| 1,1,2-Trichloroethane | **86** | % | | 8260B/624 | CW | 9/22/2015 |
| Trichloroethene | **94** | % | | 8260B/624 | CW | 9/22/2015 |
| EPA Method 5035 Methanol Preserv | **Extracted** | | | EPA 5035 | PME | 9/16/2015 |
| %Solid | **95** | % | | ASTM D2216 | HD | 9/21/2015 |

All soil results based on dry weight.

DL=Reported detection limit for analytical method requested. Some compounds require special analytical methods to achieve MDNR designated target detection limits (TDL).

Released by: Shirley M. Smith

Date: 24 Sept 2015

Brighton Analytical, L.L.C.™

**Brighton Analytical, L.L.C.**
**2105 Pless Drive**
**Brighton, Michigan 48116**
**Phone: (810) 229-7575 FAX: (810) 229-8650**
e-mail: bai-brighton@sbcglobal.net

Sample Date: 9/16/2015
Submit Date: 9/21/2015
Report Date: 9/24/2015

To: PM Environmental, Inc.
4080 W. 11 Mile Rd.
Berkley, MI 48072

BA Report Number: **36031**
BA Sample ID: **CB09967**

Project Name: **Beacon and Bridge #8**
Project Number: **01-4982-0-002**
Sample ID: **SB-18 7'-8' MSD**

| Parameters | Results | Units | DL | Method Reference | Analyst | Analysis Date |
|---|---|---|---|---|---|---|
| **GRO Analysis** | | | | | | |
| GRO (Methanol Preserved) | **86%** | ug/Kg | | SW846 8015 | BY | 9/23/2015 |
| **Volatile Analysis** | | | | | | |
| Carbon tetrachloride | **95** | % | | 8260B/624 | CW | 9/22/2015 |
| Chlorobenzene | **88** | % | | 8260B/624 | CW | 9/22/2015 |
| Chloroform | **86** | % | | 8260B/624 | CW | 9/22/2015 |
| cis-1,3-Dichloropropene | **79** | % | | 8260B/624 | CW | 9/22/2015 |
| Dibromochloromethane | **85** | % | | 8260B/624 | CW | 9/22/2015 |
| 1,2-Dichlorobenzene | **85** | % | | 8260B/624 | CW | 9/22/2015 |
| 1,3-Dichlorobenzene | **83** | % | | 8260B/624 | CW | 9/22/2015 |
| 1,4-Dichlorobenzene | **81** | % | | 8260B/624 | CW | 9/22/2015 |
| 1,1-Dichloroethane | **87** | % | | 8260B/624 | CW | 9/22/2015 |
| 1,2-Dichloroethane | **86** | % | | 8260B/624 | CW | 9/22/2015 |
| 1,1-Dichloroethene | **98** | % | | 8260B/624 | CW | 9/22/2015 |
| 1,2-Dichloropropane | **90** | % | | 8260B/624 | CW | 9/22/2015 |
| Tetrachloroethane | **83** | % | | 8260B/624 | CW | 9/22/2015 |
| 1,1,2,2-Tetrachloroethane | **79** | % | | 8260B/624 | CW | 9/22/2015 |
| 1,1,2-Trichloroethane | **84** | % | | 8260B/624 | CW | 9/22/2015 |
| Trichloroethene | **96** | % | | 8260B/624 | CW | 9/22/2015 |
| EPA Method 5035 Methanol Preserv | **Extracted** | | | EPA 5035 | PME | 9/16/2015 |
| %Solid | **95** | % | | ASTM D2216 | HD | 9/21/2015 |

All soil results based on dry weight.

DL=Reported detection limit for analytical method requested. Some compounds require special analytical methods to achieve MDNR designated target detection limits (TDL).

Released by: Shirley M. Sui

Date: 24 Sept 2015

**Brighton Analytical, L.L.C.**
**2105 Pless Drive**
**Brighton, Michigan 48116**
**Phone: (810) 229-7575 FAX: (810) 229-8650**
e-mail: bai-brighton@sbcglobal.net

Sample Date: 9/16/2015
Submit Date: 9/21/2015
Report Date: 9/24/2015

To: PM Environmental, Inc.
4080 W. 11 Mile Rd.
Berkley, MI 48072

BA Report Number: **36031**
BA Sample ID: **CB09968**

Project Name: **Beacon and Bridge #8**
Project Number: **01-4982-0-002**
Sample ID: **TMW-18**

| Parameters | Results | Units | DL | Method Reference | Analyst | Analysis Date |
|---|---|---|---|---|---|---|
| **Dissolved Metal Analysis** | | | | | | |
| Dissolved Lead | **<3** | ug/L | 3 | EPA 200.8 rev5.4 | LT | 9/23/2015 |
| **GRO Analysis** | | | | | | |
| Gasoline Range Organics | **<100** | ug/L | 100 | SW846 8015C | BY | 9/21/2015 |
| **Volatile Analysis** | | | | | | |
| Benzene | **<1** | ug/L | 1 | SW846 8260B | CW | 9/23/2015 |
| 1,2-Dibromoethane | **<1** | ug/L | 1 | SW846 8260B | CW | 9/23/2015 |
| 1,2-Dichloroethane | **<1** | ug/L | 1 | SW846 8260B | CW | 9/23/2015 |
| Ethanol(Ethyl alcohol) | **<1000** | ug/L | 1000 | SW846 8260B | CW | 9/23/2015 |
| Ethylbenzene | **<1** | ug/L | 1 | SW846 8260B | CW | 9/23/2015 |
| Isopropylbenzene | **<1** | ug/L | 1 | SW846 8260B | CW | 9/23/2015 |
| 2-Methylnaphthalene | **<5** | ug/L | 5 | SW846 8260B | CW | 9/23/2015 |
| MTBE | **<1** | ug/L | 1 | SW846 8260B | CW | 9/23/2015 |
| Naphthalene | **<5** | ug/L | 5 | SW846 8260B | CW | 9/23/2015 |
| n-Propylbenzene | **<1** | ug/L | 1 | SW846 8260B | CW | 9/23/2015 |
| Toluene | **<1** | ug/L | 1 | SW846 8260B | CW | 9/23/2015 |
| 1,2,3-Trimethylbenzene | **<1** | ug/L | 1 | SW846 8260B | CW | 9/23/2015 |
| 1,2,4-Trimethylbenzene | **<1** | ug/L | 1 | SW846 8260B | CW | 9/23/2015 |
| 1,3,5-Trimethylbenzene | **<1** | ug/L | 1 | SW846 8260B | CW | 9/23/2015 |
| Xylenes(total) | **<3** | ug/L | 3 | SW846 8260B | CW | 9/23/2015 |

DL=Reported detection limit for analytical method requested. Some compounds require special analytical methods to achieve MDNR designated target detection limits (TDL).

Released by:

Date: 24 Sept 2015

Brighton Analytical L.L.C.

# BRIGHTON ANALYTICAL, LLC

# QUALITY ASSURANCE/QUALITY CONTROL

# GC/MS

# VOLATILE METHOD 8260/624

## REPRESENTATIVE BATCH PRECISION AND ACCURACY QUALITY CONTROL SUMMARY

Analysis Date: September 23, 2015 Spike Std. ID: 2508.1 Inst./Detec: HP7890/5975 Vol6

Laboratory ID: CB09675 Matrix: Water Analyst: CW

| | Matrix Spike - Precision | | | Matrix spike - Accuracy | | | | | | |
|---|---|---|---|---|---|---|---|---|---|---|
| | Spike 1 ug/L | Spike 2 ug/L | Relative Percent Difference +/- 20% | Spk Conc ug/L | % Recovery | % Recovery | Range (%) | Sample background ug/L | LCS +/- 20% | Method Blank |
| d4-1,2-Dichloroethane | 48.8 | 49.4 | 1.4 | 50 | 98 | 99 | 70-130 | 98% | 97% | 98% |
| d8-Toluene | 50.7 | 51.5 | 1.6 | 50 | 101 | 103 | 70-130 | 104% | 101% | 102% |
| 4-Bromofluorobenzene | 47.8 | 47.0 | 1.6 | 50 | 96 | 94 | 70-130 | 105% | 97% | 105% |
| COMPOUNDS | | | | | | | | | | |
| 1,1- Dichloroethene | 46.2 | 45.7 | 1.2 | 50 | 92% | 91% | 70-130 | <1 | 91% | <1 |
| 1,1- Dichloroethane | 41.6 | 41.8 | 0.5 | 50 | 83% | 84% | 70-130 | <1 | 91% | <1 |
| Chloroform | 41.0 | 40.9 | 0.1 | 50 | 82% | 82% | 70-130 | <1 | 87% | <1 |
| 1,2- Dichlororethane | 40.7 | 40.5 | 0.4 | 50 | 81% | 81% | 70-130 | <1 | 85% | <1 |
| Carbon tetrachloride | 44.5 | 43.9 | 1.2 | 50 | 89% | 88% | 70-130 | <1 | 90% | <1 |
| 1,2- Dichloropropane | 42.7 | 41.7 | 2.4 | 50 | 85% | 83% | 70-130 | <1 | 90% | <1 |
| cis- 1,3 -dichloropropene | 37.2 | 37.5 | 1.0 | 50 | 74% | 75% | 70-130 | <1 | 85% | <1 |
| Trichloroethene | 42.5 | 43.7 | 2.8 | 50 | 81% | 83% | 70-130 | 2.2 | 89% | <1 |
| Dibromochloromethane | 39.8 | 39.4 | 1.1 | 50 | 80% | 79% | 70-130 | <1 | 86% | <1 |
| 1,1,2- Trichloroehtane | 39.8 | 39.9 | 0.2 | 50 | 80% | 80% | 70-130 | <1 | 88% | <1 |
| Tetrachloroethane | 37.7 | 38.0 | 0.8 | 50 | 38% | 38% | 70-130 | 18.9 | 94% | <1 |
| 1,1,2,2 -Tetrachloroethane | 36.6 | 36.8 | 0.5 | 50 | 73% | 74% | 70-130 | <1 | 81% | <1 |
| Chlorobenzene | 41.3 | 40.7 | 1.4 | 50 | 83% | 81% | 70-130 | <1 | 91% | <1 |
| 1,3- Dichlorobenzene | 38.3 | 38.1 | 0.6 | 50 | 77% | 76% | 70-130 | <1 | 85% | <1 |
| 1,4- Dichlorobenzene | 37.6 | 37.8 | 0.8 | 50 | 75% | 76% | 70-130 | <1 | 85% | <1 |
| 1,2-Dichlorobenzene | 39.2 | 39.2 | 0.0 | 50 | 78% | 78% | 70-130 | <1 | 86% | <1 |

ug/L is equivalent to ppb

Comments: _____

# GC/MS

# VOLATILE METHOD 8260/624

## REPRESENTATIVE BATCH PRECISION AND ACCURACY QUALITY CONTROL SUMMARY

Analysis Date: September 22, 2015 Spike Std. ID: 2506.1 Inst /Detec: HP7890/5975 Vol6

Laboratory ID: CB09958 Matrix: Mech Soil Analyst: CW

| | Matrix Spike - Precision | | | Matrix spike - Accuracy | | | | | | |
|---|---|---|---|---|---|---|---|---|---|---|
| | Spike 1 ug/L | Spike 2 ug/L | Relative Percent Difference +/- 20% | Spk Conc ug/L | % Recovery | % Recovery | Range (%) | Sample background ug/L | LCS +/- 20% | Method Blank |
| d4-1,2-Dichloroethane | 49.4 | 48.8 | 1.2 | 50 | 99 | 98 | 70-130 | 98% | 97% | 97% |
| d8-Toluene | 48.5 | 50.2 | 3.5 | 50 | 97 | 100 | 70-130 | 99% | 101% | 102% |
| 4-Bromofluorobenzene | 47.0 | 47.5 | 1.1 | 50 | 94 | 95 | 70-130 | 101% | 95% | 109% |
| COMPOUNDS | | | | | | | | | | |
| 1,1- Dichloroethene | 49.6 | 50.6 | 2.0 | 50 | 99% | 101% | 70-130 | <1 | 94% | <1 |
| 1,1- Dichloroethane | 45.2 | 45.4 | 0.6 | 50 | 90% | 91% | 70-130 | <1 | 92% | <1 |
| Chloroform | 44.1 | 44.6 | 1.1 | 50 | 88% | 89% | 70-130 | <1 | 89% | <1 |
| 1,2- Dichloroethane | 43.5 | 43.8 | 0.8 | 50 | 87% | 88% | 70-130 | <1 | 89% | <1 |
| Carbon tetrachloride | 44.9 | 43.6 | 2.8 | 50 | 90% | 87% | 70-130 | <1 | 91% | <1 |
| 1,2- Dichloropropane | 43.8 | 44.7 | 2.0 | 50 | 88% | 89% | 70-130 | <1 | 90% | <1 |
| cis- 1,3 -dichloropropene | 39.5 | 40.9 | 3.4 | 50 | 79% | 82% | 70-130 | <1 | 84% | <1 |
| Trichloroethene | 44.7 | 45.4 | 1.5 | 50 | 89% | 91% | 70-130 | <1 | 91% | <1 |
| Dibromochloromethane | 40.5 | 41.1 | 1.4 | 50 | 81% | 82% | 70-130 | <1 | 87% | <1 |
| 1,1,2- Trichloroehtane | 39.5 | 41.2 | 4.2 | 50 | 79% | 82% | 70-130 | <1 | 88% | <1 |
| Tetrachloroethane | 39.3 | 40.8 | 3.7 | 50 | 79% | 82% | 70-130 | <1 | 89% | <1 |
| 1,1,2,2 -Tetrachloroethane | 38.8 | 40.6 | 4.4 | 50 | 78% | 81% | 70-130 | <1 | 83% | <1 |
| Chlorobenzene | 41.2 | 42.9 | 4.0 | 50 | 82% | 86% | 70-130 | <1 | 87% | <1 |
| 1,3- Dichlorobenzene | 41.7 | 41.9 | 0.5 | 50 | 83% | 84% | 70-130 | <1 | 85% | <1 |
| 1,4- Dichlorobenzene | 40.6 | 42.1 | 3.7 | 50 | 81% | 84% | 70-130 | <1 | 84% | <1 |
| 1,2-Dichlorobenzene | 42.3 | 42.4 | 0.4 | 50 | 85% | 85% | 70-130 | <1 | 85% | <1 |

ug/L is equivalent to ppb

Comments: _____

# GC/MS

# VOLATILE METHOD 8260/624

## REPRESENTATIVE BATCH PRECISION AND ACCURACY QUALITY CONTROL SUMMARY

Analysis Date: September 22, 2015 Spike Std. ID: 2506.1 Inst./Detec: HP7890/5975 Vol6

Laboratory ID: CB09966-67 Matrix: Meoh Soil Analyst: CW

| | Matrix Spike - Precision | | | Matrix spike - Accuracy | | | | | | |
|---|---|---|---|---|---|---|---|---|---|---|
| | Spike 1 ug/L | Spike 2 ug/L | Relative Percent Difference +/- 20% | Spk Conc ug/L | % Recovery | % Recovery | Range (%) | Sample background ug/L | LCS +/- 20% | Method Blank |
| d4-1,2-Dichloroethane | 48.9 | 48.7 | 0.5 | 50 | 98 | 97 | 70-130 | 97% | 97% | 97% |
| d8-Toluene | 51.6 | 51.3 | 0.4 | 50 | 103 | 103 | 70-130 | 99% | 101% | 102% |
| 4-Bromofluorobenzene | 47.9 | 47.7 | 0.2 | 50 | 96 | 95 | 70-130 | 102% | 95% | 109% |
| COMPOUNDS | | | | | | | | | | |
| 1,1- Dichloroethene | 48.9 | 49.2 | 0.5 | 50 | 98% | 98% | 70-130 | <1 | 94% | <1 |
| 1,1- Dichloroethane | 44.2 | 43.4 | 1.8 | 50 | 88% | 87% | 70-130 | <1 | 92% | <1 |
| Chloroform | 44.0 | 43.2 | 1.8 | 50 | 88% | 86% | 70-130 | <1 | 89% | <1 |
| 1,2- Dichlororethane | 44.0 | 43.2 | 1.8 | 50 | 88% | 86% | 70-130 | <1 | 89% | <1 |
| Carbon tetrachloride | 46.7 | 47.3 | 1.4 | 50 | 93% | 95% | 70-130 | <1 | 91% | <1 |
| 1,2- Dichloropropane | 46.2 | 45.2 | 2.0 | 50 | 92% | 90% | 70-130 | <1 | 90% | <1 |
| cis- 1,3 -dichloropropene | 40.1 | 39.3 | 2.0 | 50 | 80% | 79% | 70-130 | <1 | 84% | <1 |
| Trichloroethene | 47.2 | 47.9 | 1.5 | 50 | 94% | 96% | 70-130 | <1 | 91% | <1 |
| Dibromochloromethane | 43.5 | 42.6 | 2.1 | 50 | 87% | 85% | 70-130 | <1 | 87% | <1 |
| 1,1,2- Trichloroehlane | 43.2 | 41.9 | 2.9 | 50 | 86% | 84% | 70-130 | <1 | 88% | <1 |
| Tetrachloroethane | 43.1 | 41.7 | 3.3 | 50 | 86% | 83% | 70-130 | <1 | 89% | <1 |
| 1,1,2,2 -Tetrachloroethane | 40.8 | 39.5 | 3.4 | 50 | 82% | 79% | 70-130 | <1 | 83% | <1 |
| Chlorobenzene | 43.3 | 44.0 | 1.8 | 50 | 87% | 88% | 70-130 | <1 | 87% | <1 |
| 1,3- Dichlorobenzene | 41.6 | 41.4 | 0.4 | 50 | 83% | 83% | 70-130 | <1 | 85% | <1 |
| 1,4- Dichlorobenzene | 41.0 | 40.6 | 2.4 | 50 | 83% | 81% | 70-130 | <1 | 84% | <1 |
| 1,2-Dichlorobenzene | 42.9 | 42.3 | 1.4 | 50 | 86% | 85% | 70-130 | <1 | 85% | <1 |

ug/L is equivalent to ppb

Comments: _____

# GC/MS

# VOLATILE METHOD 8260/624

## REPRESENTATIVE BATCH PRECISION AND ACCURACY QUALITY CONTROL SUMMARY

Analysis Date: September 23, 2015 Spike Std. ID: 2506.1 Inst./Detec: HP7890/5975 Vol6

Laboratory ID: CB09892 Matrix: Mech Soil Analyst: CW

| | Matrix Spike - Precision | | | Matrix spike - Accuracy | | | | | | |
|---|---|---|---|---|---|---|---|---|---|---|
| | Spike 1 ug/L | Spike 2 ug/L | Relative Percent Difference +/- 20% | Spk Conc ug/L | % Recovery | % Recovery | Range (%) | Sample background ug/L | LCS +/- 20% | Method Blank |
| d4-1,2-Dichloroethane | 48.6 | 48.3 | 0.7 | 50 | 97 | 97 | 70-130 | 98% | 98% | 96% |
| d8-Toluene | 49.0 | 48.9 | 0.1 | 50 | 98 | 98 | 70-130 | 99% | 100% | 103% |
| 4-Bromofluorobenzene | 46.9 | 47.8 | 2.0 | 50 | 94 | 96 | 70-130 | 103% | 93% | 106% |
| COMPOUNDS | | | | | | | | | | |
| 1,1- Dichloroethene | 47.5 | 47.6 | 0.1 | 50 | 95% | 95% | 70-130 | <1 | 93% | <1 |
| 1,1- Dichloroethane | 42.6 | 44.3 | 3.9 | 50 | 85% | 89% | 70-130 | <1 | 92% | <1 |
| Chloroform | 42.1 | 42.5 | 1.0 | 50 | 84% | 85% | 70-130 | <1 | 87% | <1 |
| 1,2- Dichlororethene | 41.2 | 42.4 | 2.8 | 50 | 82% | 85% | 70-130 | <1 | 88% | <1 |
| Carbon tetrachloride | 42.4 | 40.9 | 3.6 | 50 | 85% | 82% | 70-130 | <1 | 90% | <1 |
| 1,2- Dichloropropane | 41.7 | 41.5 | 0.6 | 50 | 83% | 83% | 70-130 | <1 | 87% | <1 |
| cis- 1,3 -dichloropropene | 41.8 | 41.9 | 0.2 | 50 | 84% | 84% | 70-130 | <1 | 90% | <1 |
| Trichloroethene | 42.8 | 43.3 | 1.1 | 50 | 81% | 82% | 70-130 | 2.2 | 90% | <1 |
| Dibromochloromethane | 38.4 | 39.9 | 3.9 | 50 | 77% | 80% | 70-130 | <1 | 86% | <1 |
| 1,1,2- Trichloroehtane | 39.2 | 39.1 | 0.4 | 50 | 78% | 78% | 70-130 | <1 | 86% | <1 |
| Tetrachloroethane | 38.8 | 37.9 | 2.3 | 50 | 40% | 38% | 70-130 | 18.9 | 89% | <1 |
| 1,1,2,2 -Tetrachloroethane | 37.2 | 38.3 | 2.9 | 50 | 74% | 77% | 70-130 | <1 | 85% | <1 |
| Chlorobenzene | 40.0 | 40.9 | 2.2 | 50 | 80% | 82% | 70-130 | <1 | 84% | <1 |
| 1,3- Dichlorobenzene | 40.6 | 41.6 | 2.4 | 50 | 81% | 83% | 70-130 | <1 | 84% | <1 |
| 1,4- Dichlorobenzene | 40.2 | 40.8 | 1.5 | 50 | 80% | 82% | 70-130 | <1 | 83% | <1 |
| 1,2-Dichlorobenzene | 40.3 | 41.6 | 3.2 | 50 | 81% | 83% | 70-130 | <1 | 83% | <1 |

ug/L is equivalent to ppb

Comments: _____

# REPRESENTATIVE BATCH QUALITY CONTROL

## Accuracy & Precision

**Analyst:** BY **Parameter:** GRO

**Analysis Date:** 9/23/2015 **Method Reference:** EPA 8015

**Matrix:** Soil **Inst./Detector :** HP-3/FID

| SPIKE - ACCURACY | | | | | |
|---|---|---|---|---|---|
| **Laboratory ID** CB09965 | **Spike Conc. (µg/mL)** | **Background (µg/mL)** | **% Recovery** | **Acceptable Range (%)** | **Method Blank Concentration** |
| 2-Bromochlorobenzene ($S_2$) | 30 | ND | 92 / 79 | 60 - 130 | 85% |
| GRO | 110 | ND | 92 / 86 | 60 - 130 | <100 µg/L |

| SPIKE - PRECISION | | | | |
|---|---|---|---|---|
| **Laboratory ID** CB09965 | **Observed A (µg/mL)** | **Observed B (µg/mL)** | **RPD** | **Acceptable Range** |
| 2-Bromochlorobenzene ($S_2$) | 27.5 | 23.7 | 14.8 | ≤ 20% |
| GRO | 101.4 | 95.0 | 6.5 | ≤ 20% |

| MISCELLANEOUS | | |
|---|---|---|
| | **Standard ID #** | |
| 2-Bromochlorobenzene ($S_2$) | #2287 | |
| GRO | #2392 | |

**COMMENTS:**

# REPRESENTATIVE BATCH QUALITY CONTROL

## Accuracy & Precision

**Analyst:** BY **Parameter:** GRO

**Analysis Date:** 9/21/2015 **Method Reference:** EPA 8015

**Matrix:** Water **Inst./Detector :** HP-3/FID

| SPIKE - ACCURACY | | | | | |
|---|---|---|---|---|---|
| **Laboratory ID** CB09195 | **Spike Conc. (µg/mL)** | **Background (µg/mL)** | **% Recovery** | **Acceptable Range (%)** | **Method Blank Concentration** |
| 2-Bromochlorobenzene ($S_2$) | 30 | ND | 97 / 104 | 60 - 130 | 86% |
| GRO | 110 | ND | 107 / 105 | 60 - 130 | <100 µg/L |

| SPIKE - PRECISION | | | | |
|---|---|---|---|---|
| **Laboratory ID** CB09195 | **Observed A (µg/mL)** | **Observed B (µg/mL)** | **RPD** | **Acceptable Range** |
| 2-Bromochlorobenzene ($S_2$) | 29.2 | 31.1 | 6.3 | ≤ 20% |
| GRO | 118.0 | 115.8 | 1.9 | ≤ 20% |

| MISCELLANEOUS | | |
|---|---|---|
| | **Standard ID #** | |
| 2-Bromochlorobenzene ($S_2$) | #2287 | |
| GRO | #2392 | |

**COMMENTS:**

# REPRESENTATIVE BATCH QUALITY CONTROL

## Accuracy & Precision

**Analyst:** BY **Parameter:** GRO

**Analysis Date:** 9/22/2015 **Method Reference:** EPA 8015

**Matrix:** Soil **Inst./Detector :** HP-3/FID

| SPIKE - ACCURACY | | | | | |
|---|---|---|---|---|---|
| Laboratory ID<br>CB09955 | Spike Conc. (µg/mL) | Background (µg/mL) | % Recovery | Acceptable Range (%) | Method Blank Concentration |
| 2-Bromochlorobenzene ($S_2$) | 30 | ND | 84 / 103 | 60 - 130 | 100% |
| GRO | 110 | ND | 112 / 106 | 60 - 130 | <100 µg/L |

| SPIKE - PRECISION | | | | |
|---|---|---|---|---|
| Laboratory ID<br>CB09955 | Observed A (µg/mL) | Observed B (µg/mL) | RPD | Acceptable Range |
| 2-Bromochlorobenzene ($S_2$) | 25.2 | 30.8 | 20.0 | ≤ 20% |
| GRO | 123.1 | 116.9 | 5.2 | < 20% |

| MISCELLANEOUS | | |
|---|---|---|
| | Standard ID # | |
| 2-Bromochlorobenzene ($S_2$) | #2287 | |
| GRO | #2392 | |

**COMMENTS:**

# ICP-MS
## METHOD 200.8

**REPRESENTATIVE BATCH PRECISION AND ACCURACY QUALITY CONTROL SUMMARY**

Analysis Date: 9/23/15 Standard ID: 090915 H2O Batch: 8/23/2015

Matrix Spike Lab ID: CB09933 Matrix: Dissolved Analyst: LT

| Metals | Matrix Spike - Precision * | | | Matrix Spike - Accuracy** | | | | Miscellaneous*** | | |
|---|---|---|---|---|---|---|---|---|---|---|
| | Matrix Spike (ug/L) | Matrix Spike Dup (ug/L) | RPD (%) | Spk Conc (ug/L) | MS Recovery (%) | MSD Recovery (%) | Sample Conc (ug/L) | Method Blk (ug/L) | LCS-Method STD (%) | Ind. Std. SPEX 1&3 (%) |
| Iron | 28673 | 30447 | 6.0 | 20000 | 105.7 | 114.6 | 7529 | <0.2 | 107.8 | 95.7 |
| Lead | 2061 | 1994 | 3.3 | 2000 | 103.0 | 99.7 | 1 | <1 | 106.8 | 97.3 |

* Matrix spike precision range +/- 20% RPD
** Matrix spike accuracy range +/- 30% recovery
*** LCS accuracy range +/- 15% recovery / Ind std accuracy range +/- 10% recovery

Comments:

Brighton Analytical L.L.C.™
2105 Pless Drive · Brighton, Michigan 48114 · Phone (810) 229-7575 · Fax (810) 229-8650 · E-mail bai-brighton@sbcglobal.net

October 20, 2015

PM Environmental, Inc.
4080 W. 11 Mile Rd.
Berkley, MI 48072

Subject: Beacon & Bridge #8
01-4982-0-003

Dear Ms. Santiago :

Thank you for making Brighton Analytical, L.L.C. your laboratory of choice. Attached are the results for the samples submitted on 10/07/2015 for the above mentioned project. NELAP/TNI Accredited Analysis and MDEQ Drinking Water Certified Analysis will be identified in their respective reporting formats. Hard copies can be supplied at your request for a fee of $20.00 per copy.

The invoice for this project will be emailed separately. If you have any questions concerning the data or invoice, please don't hesitate to contact our office. We welcome your comments and suggestions to improve our quality systems. Please reference Brighton Analytical, L.L.C. Project ID 36263 when calling or emailing. We thank you for this opportunity to partner with you on this project and hope to work with you again in the future.

Sincerely,
Brighton Analytical, L.L.C.

DEQ
NELAP ACCREDITED LABORATORY TNI
Certified WBENC Women's Business Enterprise

# Brighton Analytical, L.L.C.™

Email: bai-brighton@sbcglobal.net
2105 Pless Drive
Brighton, MI 48114
Phone: 810-229-7575
Fax: 810-229-8650

BA PROJECT #: 362263

PAGE 1 OF 2

PROJECT NAME: Beacon & Bridge #8

PROJECT #: 01-4982-0-003

PO #: (PLEASE NOTE IF DIFFERENT BILLING ADDRESS)

Sample collected by: Doug Spencer

**ABBREVIATIONS FOR MATRIX**
S = Solid
L = Liquid
DW = Drinking $H_2O$
O = Oil
P = Wipe
A = Air (Tedlar Bag)
F = Filter
T = Tube
M = Misc.

**REQUESTED TURNAROUND:** (circle one)
Rush: 1-3 business days (verify with lab & specify date needed)
1 Day = 2.5X Cost 2 Day = 2X Cost 3 Day = 1.5X Cost
Standard: 5 business days

If RUSH, approved by: _____

Analysis Requested/Method: TO-15/VOC (Soil Gas)

| Brighton ID # | Sample Description | Sample Coll. Date | Sample Coll. Time | Container Type & Quantity: VOA'S (PRES) Y N N/A | HDPE UNPRESERVED | HDPE HNO3 | EDPE H2SO4 | HDPE NaOH | AMBER PRESERVED? | GLASS, NO PRESERVATIVE | STERILIZED BACTERIA | MEOH Preserved Y N | Sample Matrix | TO-15/VOC (Soil Gas) |
|---|---|---|---|---|---|---|---|---|---|---|---|---|---|---|
| 1) CC00638 | SG-1 | 10/6/15 | 13:23-13:28 | | | | | | | | | | SV | X |
| 2) 39 | SG-2 | ↓ | 13:28-13:33 | | | | | | | | | | SV | X |
| 3) 40 | SG-3 | | 11:25-11:30 | | | | | | | | | | SV | X |
| 4) 41 | SG-4 | | 11:10-11:15 | | | | | | | | | | SV | X |
| 5) 42 | SG-5 | | 11:36-11:41 | | | | | | | | | | SV | X |
| 6) 43 | SG-6 | | 13:45-13:50 | | | | | | | | | | SV | X |
| 7) 44 | SG-7S | | 12:48-12:53 | | | | | | | | | | SV | X |
| 8) 45 | SG-7D | | 12:54-12:59 | | | | | | | | | | SV | X |
| 9) 46 | SG-8 | | 10:00-10:05 | | | | | | | | | | SV | X |
| 10) 47 | SG-9 | ↓ | 09:45-09:50 | | | | | | | | | | SV | X |

**COMPANY/MAILING ADDRESS:**
PM Environmental
4080 West Eleven Mile Rd.
Berkley, MI 48072
ATTN: Christie Santiago
PHONE: 248-336-9988
FAX OR EMAIL: Santiago@pmenv.com

Samples received within hold time? yes ☑ no ☐
Temperature of samples °C: 4
pHs verified in login? yes ☐ no ☑
Headspace/bubbles in VOA's? yes ☐ no ☐ n/a ☑
Sample containers and COC match? yes ☑ no ☐

**BILLING ADDRESS (IF REQUIRED):**

**Drinking $H_2O$:**
Fax to LCHD? yes ☐ no ☐
Chlorinated Water Supply? yes ☐ no ☐
AMT.: _____

MCL Failure: yes ☐ no ☐
Client Notified (date/time/initials): _____

**Special Instructions:** See Soil gas C.O.C. addendums in each box.

***Please fill out the Chain of Custody completely and review. Incorrect or incomplete information will result in a "hold" on all analyses.***

| Trans. # | RELINQUISHED BY: | RECEIVED BY: | DATE: | TIME: | Trans. # | RELINQUISHED BY: | RECEIVED BY: | DATE: | TIME: |
|---|---|---|---|---|---|---|---|---|---|
| 1 | [signature] | PM Storage | 10/6/15 | 17:00 | 3 | [signature] | [signature] | 10/7/15 | 1500 |
| 2 | PM Storage | [signature] | 10/7/15 | 1330 | 4 | | | | |

# Brighton Analytical, L.L.C.™

email: bai-brighton@sbcglobal.net

2105 Pless Drive
Brighton, MI 48114

Phone: 810-229-7575
FAX: 810-229-8650


BA PROJECT #: 36263

ABBREVIATIONS FOR MATRIX
S = Solid
L = Liquid
DW = Drinking $H_2O$
O = Oil
P = Wipes
A = Air (Tedlar Bag)
F = Filter
T = Tube M = Misc.

PAGE 2 OF 2

COMPANY/MAILING ADDRESS:
PM Environmental
4080 West Eleven Mile Rd.
Berkley, MI 48072

ATTN: Christie Santiago

PHONE: 248-336-9988

FAX OR EMAIL: Santiago@pmenv.com

PROJECT NAME: Beacon & Bridge #8

PROJECT #: 01-4982-0-003

PO #: (PLEASE NOTE IF DIFFERENT BILLING ADDRESS)

Sample Collected By: Doug Spencer

REQUESTED TURNAROUND: (circle one)
Rush: 1-3 business days (verify with lab & specify date needed)
1 Day =2.5X Cost 2 Day= 2X Cost 3 Day = 1.5X Cost
Standard: 5 business days

If RUSH, approved by: _____

Samples received within hold time? yes no

Temperature of samples °C:

pHs verified in login? yes no

Headspace/bubbles in VOA's? yes no n/a

Sample containers and COC match? yes no

| Brighton ID # | Sample Description | Sample Coll. Date | Sample Coll. Time | VOA'S (PRES) Y N NA | HDPE UNPRESERVED | HDPE $HNO_3$ | HDPE $H_2SO_4$ | HDPE NaOH | AMBER Preserved? | GLASS, SO PRESERVATIVE | STERILIZED HACH (HRA) | MBOH Received Y N | Sample Matrix | Analysis Requested/Method: VOC/TO-15 |
|---|---|---|---|---|---|---|---|---|---|---|---|---|---|---|
| 1) 48 | SG-10 | 10/6/15 | 10:35 10:40 | | | | | | | | | | SV | X |
| 2) 49 | SG-11 | ↓ | 13:35 13:40 | | | | | | | | | | SV | X |
| 3) 50 | SG-12 | ↓ | 10:17 10:22 | | | | | | | | | | SV | X |
| 4) | | | | | | | | | | | | | | |
| 5) | | | | | | | | | | | | | | |
| 6) | | | | | | | | | | | | | | |
| 7) | | | | | | | | | | | | | | |
| 8) | | | | | | | | | | | | | | |
| 9) | | | | | | | | | | | | | | |
| 10) | | | | | | | | | | | | | | |

BILLING ADDRESS (IF REQUIRED):

Drinking H2O: FAX TO LCHD yes no

Chlorinated Water Supply? yes no
AMT.: _____

MCL failure: yes no

Client notified (date/time/initials):

Special Instructions: See Soil gas C.O.C. addendums in each box.

*Please fill out the Chain of Custody completely and review. Incorrect or incomplete information will result in a "hold" on all analyses.*

| Trans. # | RELINQUISHED BY: | RECEIVED BY: | DATE: | TIME: | Trans. # | RELINQUISHED BY: | RECEIVED BY: | DATE: | TIME: |
|---|---|---|---|---|---|---|---|---|---|
| 1 | [illegible] | PM Storage | 10/6/15 | 17:00 | 3 | [illegible] | [illegible] | 10-7-15 | 1500 |
| 2 | PM Storage | [illegible] | 10/7/15 | 1300 | 4 | | | | |

COC ADDENDA

DATE 10-2-15

COMPANY PM

CONTAINER AND SERIAL # 1 L [illegible]

CONTAINER CLEANED [illegible] SIGNED [illegible]

VACUUM OUT 28" hg 10-1-15 SIGNED [illegible]

SAMPLE DATE/REPRESENTATIVE 10/6/15 / D.S. Cow.

PROJECT NAME/NUMBER 01-4982-0-004

| SAMPLE ID | TIME START | TIME END | VACUUM START | VACUUM END | VOLUME | FLOW RATE |
|---|---|---|---|---|---|---|
| SG-1 | 13:23 | 13:28 | 24 in Hg | 3 in Hg | 1L | 200 ml/minute |

0638

Lab ID_____ Lab Project #_____

Date Analyzed_____ Temp/Pressure_____ Tube ID_____

Volume Calcualtion_____

Tank Dilution_____

Tube Dilution_____

Brighton Analytical L.L.C.

COC ADDENDA

DATE 10-2-15

COMPANY PM

CONTAINER AND SERIAL # 1 Lsum-a 7.0071 w [illegible] sample.

CONTAINER CLEANED 8-27-15 SIGNED [illegible]

VACUUM OUT 27" hg 10-1-15 SIGNED [illegible]

SAMPLE DATE/REPRESENTATIVE 10/6/15 / D.S./C.W.

PROJECT NAME/NUMBER 01-4982-0-003 / B&B #8

| SAMPLE ID | TIME START | TIME END | VACUUM START | VACUUM END | VOLUME | FLOW RATE |
|---|---|---|---|---|---|---|
| SG-2 | 13:28 | 13:33 | 26.5 in Hg | 1 in Hg | 1L | 200 mL/min |

Lab ID 0639 Lab Project #

Date Analyzed Temp/Pressure Tube ID

Volume Calcualtion

Tank Dilution

Tube Dilution

Brighton Analytical L.L.C.

COC ADDENDA

DATE 10-2-15

COMPANY PWA

CONTAINER AND SERIAL # 1 L SUMMA J1897 w 5 min sampler

CONTAINER CLEANED 7-27-15 SIGNED [illegible]

VACUUM OUT 27" hg 10-1-15 SIGNED [illegible]

SAMPLE DATE/REPRESENTATIVE 10/6/15 / D.S. / C.W.

PROJECT NAME/NUMBER 01-4198 2-0-003 Bob #2

| SAMPLE ID | TIME START | TIME END | VACUUM START | VACUUM END | VOLUME | FLOW RATE |
|---|---|---|---|---|---|---|
| SG-3 | 11:25 | 11:30 | 26 in Hg | 3 in Hg | 200 cc | 1L |

Lab ID 0640 Lab Project #

Date Analyzed Temp/Pressure Tube ID

Volume Calcualtion

Tank Dilution

Tube Dilution

Brighton Analytical L.L.C.

COC ADDENDA

DATE 10-2-15

COMPANY PMA

CONTAINER AND SERIAL # 1L summa J1896 w 5min sampler

CONTAINER CLEANED 8-13-15 SIGNED [illegible]

VACUUM OUT 28" hg 10-1-15 SIGNED [illegible]

SAMPLE DATE/REPRESENTATIVE 10/6/15 / D.S. / C.W.

PROJECT NAME/NUMBER 01-4982-0-003

| SAMPLE ID | TIME START | TIME END | VACUUM START | VACUUM END | VOLUME | FLOW RATE |
|---|---|---|---|---|---|---|
| SG-4 | 11:15 | 11:20 | 27in Hg | 3in Hg | 1L | 200mL/min |

Lab ID 0641 Lab Project #

Date Analyzed Temp/Pressure Tube ID

Volume Calcualtion

Tank Dilution

Tube Dilution

COC ADDENDA

DATE 10-2-15

COMPANY Pru

CONTAINER AND SERIAL # 1 L Summa R0073 w Jan sampler

CONTAINER CLEANED 8-20-15 SIGNED [illegible]

VACUUM OUT 27" Hg 10-1-15 SIGNED [illegible]

SAMPLE DATE/REPRESENTATIVE 10/6/15 / D.S./C.W.

PROJECT NAME/NUMBER 01-4987-0-003

| SAMPLE ID | TIME START | TIME END | VACUUM START | VACUUM END | VOLUME | FLOW RATE |
|---|---|---|---|---|---|---|
| SG-~~[illegible]~~5 | 11:36 | 11:41 | 24 inHg | 1 inHg | 1L | 200mL/min |

Lab ID 0642 Lab Project #

Date Analyzed Temp/Pressure Tube ID

Volume Calcualtion

Tank Dilution

Tube Dilution

Brighton Analytical L.L.C.

COC ADDENDA

DATE 10-2-15

COMPANY PM

CONTAINER AND SERIAL # 1L SUMMA R0070 w 5min sampler

CONTAINER CLEANED 8-25-15 SIGNED [illegible]

VACUUM OUT 29" hg 10-1-15 SIGNED [illegible]

SAMPLE DATE/REPRESENTATIVE 10/6/15 / D.S.

PROJECT NAME/NUMBER 01-4982-0-007 / B&B#8

| SAMPLE ID | TIME START | TIME END | VACUUM START | VACUUM END | VOLUME | FLOW RATE |
|---|---|---|---|---|---|---|
| SG-6 | 13:45 | 13:50 | 28 in Hg | 3 in Hg | 1L | 200mL/min |

Lab ID 0643 Lab Project #

Date Analyzed Temp/Pressure Tube ID

Volume Calcualtion

Tank Dilution

Tube Dilution

Brighton Analytical L.L.C.

COC ADDENDA

DATE 10-2-15

COMPANY PM

CONTAINER AND SERIAL # 1 L Summa J1898 w 5 min sampler

CONTAINER CLEANED 8-11-15 SIGNED [illegible]

VACUUM OUT 27" hg 10-1-15 SIGNED [illegible]

SAMPLE DATE/REPRESENTATIVE 10/6/15 / D.S./C.W.

PROJECT NAME/NUMBER 01-4982-0-003

| SAMPLE ID | TIME START | TIME END | VACUUM START | VACUUM END | VOLUME | FLOW RATE |
|---|---|---|---|---|---|---|
| SG-75 | 12:48 | 12:53 | 16 in Hg | 4 in Hg | 1 L | 200 mL/min |

Lab ID 0644 Lab Project #

Date Analyzed Temp/Pressure Tube ID

Volume Calcualtion

Tank Dilution

Tube Dilution

Brighton Analytical L.L.C.

COC ADDENDA

DATE 10-2-15

COMPANY PM

CONTAINER AND SERIAL # 1L summa R0072 w Swin Sampler

CONTAINER CLEANED 8-24-15 SIGNED [illegible]

VACUUM OUT 27"Hg 10-1-15 SIGNED [illegible]

SAMPLE DATE/REPRESENTATIVE 10/6/15 / P.S. C.W.

PROJECT NAME/NUMBER 01-4982-0-003 / B+B #8

| SAMPLE ID | TIME START | TIME END | VACUUM START | VACUUM END | VOLUME | FLOW RATE |
|---|---|---|---|---|---|---|
| SG-7D | 12:54 | 12:59 | 25 inHg | 1 inHg | 1L | 200mL/min |

Lab ID 0645 Lab Project #

Date Analyzed Temp/Pressure Tube ID

Volume Calcualtion

Tank Dilution

Tube Dilution

Brighton Analytical L.L.C.

COC ADDENDA

DATE 10-2-15

COMPANY PM

CONTAINER AND SERIAL # 1L summa J1878 w 5 min samples

CONTAINER CLEANED 7-22-15 SIGNED [illegible]

VACUUM OUT 27" hg 10-1-15 SIGNED [illegible]

SAMPLE DATE/REPRESENTATIVE 10/6/15 | D.S./C.W.

PROJECT NAME/NUMBER 01-4982-0-003 / B&B #8

| SAMPLE ID | TIME START | TIME END | VACUUM START | VACUUM END | VOLUME | FLOW RATE |
|---|---|---|---|---|---|---|
| 56-8 | 10:00 | 10:05 | 26 inHg | 4 inHg | 1L | 200 mL/min. |

Lab ID 0646 Lab Project #

Date Analyzed Temp/Pressure Tube ID

Volume Calcualtion

Tank Dilution

Tube Dilution

Brighton Analytical L.L.C.

COC ADDENDA

DATE 10-2-15

COMPANY PLM

CONTAINER AND SERIAL # 1 L SUMMA J1900 w 5 min sampler

CONTAINER CLEANED 7-6-15 SIGNED [illegible]

VACUUM OUT 27" hg 10-1-15 SIGNED [illegible]

SAMPLE DATE/REPRESENTATIVE 10-6-15 DS

PROJECT NAME/NUMBER 01-48720

| SAMPLE ID | TIME START | TIME END | VACUUM START | VACUUM END | VOLUME | FLOW RATE |
|---|---|---|---|---|---|---|
| SG-9 | 09:45 | 09:50 | 24 in Hg | 3 in Hg | 1L | 200 mL/min |

Lab ID 0647 Lab Project #

Date Analyzed Temp/Pressure Tube ID

Volume Calcualtion

Tank Dilution

Tube Dilution

Brighton Analytical L.L.C.

COC ADDENDA

DATE 10-2-15

COMPANY PM

CONTAINER AND SERIAL # 1 LSUMMA # RD074 w Sun sampler

CONTAINER CLEANED 7-30-15 SIGNED [illegible]

VACUUM OUT 28"Hg 10-1-15 SIGNED [illegible]

SAMPLE DATE/REPRESENTATIVE 10/6/15 / D.S.

PROJECT NAME/NUMBER 01-4982-0-003 / B&B #8

| SAMPLE ID | TIME START | TIME END | VACUUM START | VACUUM END | VOLUME | FLOW RATE |
|---|---|---|---|---|---|---|
| SG-10 | 10:35 | 10:40 | 25 inHg | 1 inHg | 1L | 200mL/min. |

Lab ID 0648 Lab Project #

Date Analyzed Temp/Pressure Tube ID

Volume Calcualtion

Tank Dilution

Tube Dilution

Brighton Analytical L.L.C.

COC ADDENDA

DATE 10-2-15

COMPANY PM

CONTAINER AND SERIAL # 1 L summa J1903 w 5min sampler

CONTAINER CLEANED 7-22-15 SIGNED [illegible]

VACUUM OUT 27" hg 10-1-15 SIGNED [illegible]

SAMPLE DATE/REPRESENTATIVE 10/6/15 / D.S./C.W.

PROJECT NAME/NUMBER 01-4982-0-003 / B&B #8

| SAMPLE ID | TIME START | TIME END | VACUUM START | VACUUM END | VOLUME | FLOW RATE |
|---|---|---|---|---|---|---|
| SG-11 | 13:13 | 13:18 | 25 in Hg | 3 in Hg | 1L | 200 mL/min |

Lab ID 0649 Lab Project #

Date Analyzed Temp/Pressure Tube ID

Volume Calcualtion

Tank Dilution

Tube Dilution

Brighton Analytical L.L.C.

COC ADDENDA

DATE 10-2-15

COMPANY Pru

CONTAINER AND SERIAL # 1 L summa J1894 w 5 min sampler

CONTAINER CLEANED 7-7-15 SIGNED [illegible]

VACUUM OUT 28" hg 10-1-15 SIGNED [illegible]

SAMPLE DATE/REPRESENTATIVE 10/6/15 / D.S. / Colo.

PROJECT NAME/NUMBER 01-4982-0-003 / [illegible] #8

| SAMPLE ID | TIME START | TIME END | VACUUM START | VACUUM END | VOLUME | FLOW RATE |
|---|---|---|---|---|---|---|
| 56-12 | 16:17 | 10:22 | 27 in Hg | 2 in Hg | 1 L | 200 mL/min. |

Lab II 0650 Lab Project #

Date Analyzed Temp/Pressure Tube ID

Volume Calcualtion

Tank Dilution

Tube Dilution

**Brighton Analytical LLC**
2105 Pless Drive
Brighton, Michigan 48114
Phone: (810)229-7575 (810)229-8650
e-mail:bai-brighton@sbcglobal.net
MDNRE Certified #9404
NELAC Accredited #176507

Sample Date 10/6/2015
Submit Date 10/7/2015
Report Date: 10/20/2015

PM Environmental, Inc.
4080 W. 11 Mile Rd.
Berkley, MI 48072

BA Project # **36263**
BA Sample ID **CC00638**
Method **TO15**

Project Name: **Beacon & Bridge #8**
Project Number: **01-4982-0-003**
Sample ID: **SG-1**

| Analyte Name | ppbv Result | Units | RL | CAS Number | ug/m3 Result | Date Analyzed | Analyst |
|---|---|---|---|---|---|---|---|
| **Volatile TO15 Analysis** | | | | | | | |
| Acetone | 66 | ppbv | 0.80 | 67-64-1 | 160 | 10/16/2015 | CW |
| Benzene | 18 | ppbv | 0.80 | 71-43-2 | 59 | 10/16/2015 | CW |
| Benzyl Chloride | <0.80 | ppbv | 0.80 | 100-44-7 | <4.1 | 10/16/2015 | CW |
| Bromodichloromethane | <0.80 | ppbv | 0.80 | 75-27-4 | <5.4 | 10/16/2015 | CW |
| Bromoethene | <0.80 | ppbv | 0.80 | 593-60-2 | <3.5 | 10/16/2015 | CW |
| Bromoform | <0.80 | ppbv | 0.80 | 75-25-2 | <8.3 | 10/16/2015 | CW |
| Bromomethane | <0.80 | ppbv | 0.80 | 74-83-9 | <3.1 | 10/16/2015 | CW |
| 1,3-Butadiene | <0.80 | ppbv | 0.80 | 106-99-0 | <1.8 | 10/16/2015 | CW |
| Carbon disulfide | <0.80 | ppbv | 0.80 | 75-15-0 | <2.5 | 10/16/2015 | CW |
| Carbon tetrachloride | <0.80 | ppbv | 0.80 | 56-23-5 | <5.0 | 10/16/2015 | CW |
| Chlorobenzene | <0.80 | ppbv | 0.80 | 108-90-7 | <3.7 | 10/16/2015 | CW |
| Chloroethane | <0.80 | ppbv | 0.80 | 75-00-3 | <2.1 | 10/16/2015 | CW |
| Chloroform | 3.4 | ppbv | 0.80 | 67-66-3 | 17 | 10/16/2015 | CW |
| Chloromethane | <0.80 | ppbv | 0.80 | 74-87-3 | <1.7 | 10/16/2015 | CW |
| 3-Chloropropene | <0.80 | ppbv | 0.80 | 107-05-1 | <2.5 | 10/16/2015 | CW |
| 2-Chlorotoluene | <0.80 | ppbv | 0.80 | 95-49-8 | <4.1 | 10/16/2015 | CW |
| cis-1,2-Dichloroethylene | <0.80 | ppbv | 0.80 | 156-59-2 | <3.2 | 10/16/2015 | CW |
| cis-1,3-Dichloropropene | <0.80 | ppbv | 0.80 | 10061-01-5 | <3.6 | 10/16/2015 | CW |
| Cyclohexane | 5.6 | ppbv | 0.80 | 110-82-7 | 19 | 10/16/2015 | CW |
| Dibromochloromethane | <0.80 | ppbv | 0.80 | 124-48-1 | <6.8 | 10/16/2015 | CW |
| 1,2-Dibromoethane | <0.80 | ppbv | 0.80 | 106-93-4 | <6.1 | 10/16/2015 | CW |
| 1,4-Dichlorobenzene | <0.80 | ppbv | 0.80 | 106-46-7 | <4.8 | 10/16/2015 | CW |
| 1,2-Dichlorobenzene | <0.80 | ppbv | 0.80 | 95-50-1 | <4.8 | 10/16/2015 | CW |
| 1,3-Dichlorobenzene | <0.80 | ppbv | 0.80 | 541-73-1 | <4.8 | 10/16/2015 | CW |
| Dichlorodifluoromethane | 6.8 | ppbv | 0.80 | 75-71-8 | 34 | 10/16/2015 | CW |
| 1,1-Dichloroethane | <0.80 | ppbv | 0.80 | 75-34-3 | <3.2 | 10/16/2015 | CW |
| 1,2-Dichloroethane | <0.80 | ppbv | 0.80 | 107-06-2 | <3.2 | 10/16/2015 | CW |
| 1,1-Dichloroethylene | <0.80 | ppbv | 0.80 | 75-35-4 | <3.2 | 10/16/2015 | CW |

**Brighton Analytical LLC**
2105 Pless Drive
Brighton, Michigan 48114
Phone: (810)229-7575 (810)229-8650
e-mail:bai-brighton@sbcglobal.net
MDNRE Certified #9404
NELAC Accredited #176507

Sample Date 10/6/2015
Submit Date 10/7/2015
Report Date: 10/20/2015

PM Environmental, Inc.
4080 W. 11 Mile Rd.
Berkley, MI 48072

BA Project # **36263**
BA Sample ID **CC00638**
Method **TO15**

Project Name: **Beacon & Bridge #8**
Project Number: **01-4982-0-003**
Sample ID: **SG-1**

| Analyte Name | ppbv Result | Units | RL | CAS Number | ug/m3 Result | Date Analyzed | Analyst |
|---|---|---|---|---|---|---|---|
| **Volatile TO15 Analysis** | | | | | | | |
| 1,2-Dichloropropane | <0.80 | ppbv | 0.80 | 78-87-5 | <3.7 | 10/16/2015 | CW |
| Dichlorotetrafluoroethane(Freon114) | <0.80 | ppbv | 0.80 | 76-14-2 | <5.6 | 10/16/2015 | CW |
| 1,4-Dioxane | <0.80 | ppbv | 0.80 | 123-91-1 | <2.9 | 10/16/2015 | CW |
| Ethanol | <2.0 | ppbv | 2.0 | 64-17-5 | <3.8 | 10/16/2015 | CW |
| Ethyl Acetate | <0.80 | ppbv | 0.80 | 141-78-6 | <2.9 | 10/16/2015 | CW |
| Ethylbenzene | 8.4 | ppbv | 0.80 | 100-41-4 | 36 | 10/16/2015 | CW |
| 4-Ethyltoluene | 18 | ppbv | 0.80 | 622-96-8 | 87 | 10/16/2015 | CW |
| Heptane | <0.80 | ppbv | 0.80 | 142-82-5 | <3.3 | 10/16/2015 | CW |
| Hexachlorobutadiene | <0.80 | ppbv | 0.80 | 87-68-3 | <8.5 | 10/16/2015 | CW |
| Hexane | 74 | ppbv | 0.80 | 110-54-3 | 260 | 10/16/2015 | CW |
| 2-Hexanone | <0.80 | ppbv | 0.80 | 591-78-6 | <3.3 | 10/16/2015 | CW |
| Isopropyl Alcohol | 210 | ppbv | 0.80 | 67-63-0 | 520 | 10/16/2015 | CW |
| Methyl ethyl ketone | 5.5 | ppbv | 0.80 | 78-93-3 | 16 | 10/16/2015 | CW |
| Methyl Isobutyl Ketone | <0.80 | ppbv | 0.80 | 108-10-1 | <3.3 | 10/16/2015 | CW |
| Methyl Tert Butyl Ether | <0.80 | ppbv | 0.80 | 1634-04-4 | <2.9 | 10/16/2015 | CW |
| Methylene chloride | 38 | ppbv | 0.80 | 75-09-2 | 130 | 10/16/2015 | CW |
| Methylmethacrylate | <0.80 | ppbv | 0.80 | 80-62-6 | <3.3 | 10/16/2015 | CW |
| m,p-Xylene | 37 | ppbv | 0.80 | 108-38-3/106-42-3 | 160 | 10/16/2015 | CW |
| Naphthalene | <0.80 | ppbv | 0.80 | 91-20-3 | <4.2 | 10/16/2015 | CW |
| o-Xylene | 13 | ppbv | 0.80 | 95-47-6 | 56 | 10/16/2015 | CW |
| Propylene | <2.0 | ppbv | 2.0 | 115-07-1 | <3.4 | 10/16/2015 | CW |
| Styrene | 1.7 | ppbv | 0.80 | 100-42-5 | 7.2 | 10/16/2015 | CW |
| Tertiary Butyl Alcohol | <0.80 | ppbv | 0.80 | 75-65-0 | <2.4 | 10/16/2015 | CW |
| 1,1,2,2-Tetrachloroethane | <0.80 | ppbv | 0.80 | 79-34-5 | <5.5 | 10/16/2015 | CW |
| Tetrachloroethylene | 0.7 | ppbv | 0.16 | 127-18-4 | 4.5 | 10/16/2015 | CW |
| Tetrahydrofuran | <0.80 | ppbv | 0.80 | 109-99-9 | <2.4 | 10/16/2015 | CW |
| Toluene | 120 | ppbv | 0.80 | 108-88-3 | 440 | 10/16/2015 | CW |
| trans-1,2-Dichloroethylene | <0.80 | ppbv | 0.80 | 156-60-5 | <3.2 | 10/16/2015 | CW |

**Brighton Analytical LLC**
2105 Pless Drive
Brighton, Michigan 48114
Phone: (810)229-7575 (810)229-8650
e-mail:bai-brighton@sbcglobal.net
MDNRE Certified #9404
NELAC Accredited #176507

Sample Date 10/6/2015
Submit Date 10/7/2015
Report Date: 10/20/2015

PM Environmental, Inc.
4080 W. 11 Mile Rd.
Berkley, MI 48072

BA Project # **36263**
BA Sample ID **CC00638**
Method **TO15**

Project Name: **Beacon & Bridge #8**
Project Number: **01-4982-0-003**
Sample ID: **SG-1**

| Analyte Name | ppbv Result | Units | RL | CAS Number | ug/m3 Result | Date Analyzed | Analyst |
|---|---|---|---|---|---|---|---|
| **Volatile TO15 Analysis** | | | | | | | |
| trans-1,3-Dichloropropene | <0.80 | ppbv | 0.80 | 10061-02-6 | <3.6 | 10/16/2015 | CW |
| 1,2,4-Trichlorobenzene | <0.80 | ppbv | 0.80 | 120-82-1 | <5.9 | 10/16/2015 | CW |
| 1,1,1-Trichloroethane | <0.80 | ppbv | 0.80 | 71-55-6 | <4.4 | 10/16/2015 | CW |
| 1,1,2-Trichloroethane | <0.80 | ppbv | 0.80 | 79-00-5 | <4.4 | 10/16/2015 | CW |
| Trichloroethylene | 1.2 | ppbv | 0.16 | 79-01-6 | 6.4 | 10/16/2015 | CW |
| Trichlorofluoromethane | 9.5 | ppbv | 0.80 | 75-69-4 | 53 | 10/16/2015 | CW |
| 1,1,2-Trichlorotrifluoroethane(Freon113) | <0.80 | ppbv | 0.80 | 76-13-1 | <6.1 | 10/16/2015 | CW |
| 1,3,5-Trimethylbenzene | 4.1 | ppbv | 0.80 | 108-67-8 | 20 | 10/16/2015 | CW |
| 1,2,4-Trimethylbenzene | 16 | ppbv | 0.80 | 95-63-6 | 81 | 10/16/2015 | CW |
| 2,2,4-Trimethylpentane | 3.5 | ppbv | 0.80 | 540-84-1 | 16 | 10/16/2015 | CW |
| Vinyl Acetate | <0.80 | ppbv | 0.80 | 108-05-4 | <2.8 | 10/16/2015 | CW |
| Vinyl chloride | <0.80 | ppbv | 0.80 | 75-01-4 | <2.0 | 10/16/2015 | CW |
| Xylenes(total) | 50 | ppbv | 0.80 | 1330-20-7 | 216 | 10/16/2015 | CW |

RL=Reported detection limit for analytical method requested. Some compounds require special analytical methods to achieve MDNR designated target detection limits (TDL).

Released by [signature]
Date 10/20/15

**Brighton Analytical LLC**
2105 Pless Drive
Brighton, Michigan 48114
Phone: (810)229-7575 (810)229-8650
e-mail:bai-brighton@sbcglobal.net
MDNRE Certified #9404
NELAC Accredited #176507

Sample Date 10/6/2015
Submit Date 10/7/2015
Report Date: 10/20/2015

PM Environmental, Inc.
4080 W. 11 Mile Rd.
Berkley, MI 48072

BA Project # **36263**
BA Sample ID **CC00639**
Method **TO15**

Project Name: **Beacon & Bridge #8**
Project Number: **01-4982-0-003**
Sample ID: **SG-2**

| Analyte Name | ppbv Result | Units | RL | CAS Number | ug/m3 Result | Date Analyzed | Analyst |
|---|---|---|---|---|---|---|---|
| **Volatile TO15 Analysis** | | | | | | | |
| Acetone | <0.80 | ppbv | 0.80 | 67-64-1 | <1.9 | 10/16/2015 | CW |
| Benzene | 26 | ppbv | 0.80 | 71-43-2 | 82 | 10/16/2015 | CW |
| Benzyl Chloride | <0.80 | ppbv | 0.80 | 100-44-7 | <4.1 | 10/16/2015 | CW |
| Bromodichloromethane | <0.80 | ppbv | 0.80 | 75-27-4 | <5.4 | 10/16/2015 | CW |
| Bromoethene | <0.80 | ppbv | 0.80 | 593-60-2 | <3.5 | 10/16/2015 | CW |
| Bromoform | <0.80 | ppbv | 0.80 | 75-25-2 | <8.3 | 10/16/2015 | CW |
| Bromomethane | <0.80 | ppbv | 0.80 | 74-83-9 | <3.1 | 10/16/2015 | CW |
| 1,3-Butadiene | <0.80 | ppbv | 0.80 | 106-99-0 | <1.8 | 10/16/2015 | CW |
| Carbon disulfide | <0.80 | ppbv | 0.80 | 75-15-0 | <2.5 | 10/16/2015 | CW |
| Carbon tetrachloride | <0.80 | ppbv | 0.80 | 56-23-5 | <5.0 | 10/16/2015 | CW |
| Chlorobenzene | <0.80 | ppbv | 0.80 | 108-90-7 | <3.7 | 10/16/2015 | CW |
| Chloroethane | <0.80 | ppbv | 0.80 | 75-00-3 | <2.1 | 10/16/2015 | CW |
| Chloroform | 4.0 | ppbv | 0.80 | 67-66-3 | 19 | 10/16/2015 | CW |
| Chloromethane | <0.80 | ppbv | 0.80 | 74-87-3 | <1.7 | 10/16/2015 | CW |
| 3-Chloropropene | <0.80 | ppbv | 0.80 | 107-05-1 | <2.5 | 10/16/2015 | CW |
| 2-Chlorotoluene | <0.80 | ppbv | 0.80 | 95-49-8 | <4.1 | 10/16/2015 | CW |
| cis-1,2-Dichloroethylene | <0.80 | ppbv | 0.80 | 156-59-2 | <3.2 | 10/16/2015 | CW |
| cis-1,3-Dichloropropene | <0.80 | ppbv | 0.80 | 10061-01-5 | <3.6 | 10/16/2015 | CW |
| Cyclohexane | <0.80 | ppbv | 0.80 | 110-82-7 | <2.8 | 10/16/2015 | CW |
| Dibromochloromethane | <0.80 | ppbv | 0.80 | 124-48-1 | <6.8 | 10/16/2015 | CW |
| 1,2-Dibromoethane | <0.80 | ppbv | 0.80 | 106-93-4 | <6.1 | 10/16/2015 | CW |
| 1,3-Dichlorobenzene | <0.80 | ppbv | 0.80 | 541-73-1 | <4.8 | 10/16/2015 | CW |
| 1,2-Dichlorobenzene | <0.80 | ppbv | 0.80 | 95-50-1 | <4.8 | 10/16/2015 | CW |
| 1,4-Dichlorobenzene | <0.80 | ppbv | 0.80 | 106-46-7 | <4.8 | 10/16/2015 | CW |
| Dichlorodifluoromethane | 100 | ppbv | 0.80 | 75-71-8 | 510 | 10/16/2015 | CW |
| 1,1-Dichloroethane | <0.80 | ppbv | 0.80 | 75-34-3 | <3.2 | 10/16/2015 | CW |
| 1,2-Dichloroethane | <0.80 | ppbv | 0.80 | 107-06-2 | <3.2 | 10/16/2015 | CW |
| 1,1-Dichloroethylene | <0.80 | ppbv | 0.80 | 75-35-4 | <3.2 | 10/16/2015 | CW |

**Brighton Analytical LLC**
2105 Pless Drive
Brighton, Michigan 48114
Phone: (810)229-7575 (810)229-8650
e-mail:bai-brighton@sbcglobal.net
MDNRE Certified #9404
NELAC Accredited #176507

Sample Date 10/6/2015
Submit Date 10/7/2015
Report Date: 10/20/2015

PM Environmental, Inc.
4080 W. 11 Mile Rd.
Berkley, MI 48072

BA Project # **36263**
BA Sample ID **CC00639**
Method **TO15**

Project Name: **Beacon & Bridge #8**
Project Number: **01-4982-0-003**
Sample ID: **SG-2**

| Analyte Name | ppbv Result | Units | RL | CAS Number | ug/m3 Result | Date Analyzed | Analyst |
|---|---|---|---|---|---|---|---|
| **Volatile TO15 Analysis** | | | | | | | |
| 1,2-Dichloropropane | <0.80 | ppbv | 0.80 | 78-87-5 | <3.7 | 10/16/2015 | CW |
| Dichlorotetrafluoroethane(Freon114) | <0.80 | ppbv | 0.80 | 76-14-2 | <5.6 | 10/16/2015 | CW |
| 1,4-Dioxane | <0.80 | ppbv | 0.80 | 123-91-1 | <2.9 | 10/16/2015 | CW |
| Ethanol | <2.0 | ppbv | 2.0 | 64-17-5 | <3.8 | 10/16/2015 | CW |
| Ethyl Acetate | <0.80 | ppbv | 0.80 | 141-78-6 | <2.9 | 10/16/2015 | CW |
| Ethylbenzene | 6.7 | ppbv | 0.80 | 100-41-4 | 29 | 10/16/2015 | CW |
| 4-Ethyltoluene | 12 | ppbv | 0.80 | 622-96-8 | 60 | 10/16/2015 | CW |
| Heptane | 55 | ppbv | 0.80 | 142-82-5 | 230 | 10/16/2015 | CW |
| Hexachlorobutadiene | <0.80 | ppbv | 0.80 | 87-68-3 | <8.5 | 10/16/2015 | CW |
| Hexane | 180 | ppbv | 0.80 | 110-54-3 | 620 | 10/16/2015 | CW |
| 2-Hexanone | <0.80 | ppbv | 0.80 | 591-78-6 | <3.3 | 10/16/2015 | CW |
| Isopropyl Alcohol | <0.80 | ppbv | 0.80 | 67-63-0 | <2.0 | 10/16/2015 | CW |
| Methyl ethyl ketone | <0.80 | ppbv | 0.80 | 78-93-3 | <2.4 | 10/16/2015 | CW |
| Methyl Isobutyl Ketone | <0.80 | ppbv | 0.80 | 108-10-1 | <3.3 | 10/16/2015 | CW |
| Methyl Tert Butyl Ether | <0.80 | ppbv | 0.80 | 1634-04-4 | <2.9 | 10/16/2015 | CW |
| Methylene chloride | 120 | ppbv | 0.80 | 75-09-2 | 420 | 10/16/2015 | CW |
| Methylmethacrylate | <0.80 | ppbv | 0.80 | 80-62-6 | <3.3 | 10/16/2015 | CW |
| m,p-Xylene | 26 | ppbv | 0.80 | 108-38-3/106-42-3 | 110 | 10/16/2015 | CW |
| Naphthalene | <0.80 | ppbv | 0.80 | 91-20-3 | <4.2 | 10/16/2015 | CW |
| o-Xylene | 7.9 | ppbv | 0.80 | 95-47-6 | 34 | 10/16/2015 | CW |
| Propylene | <2.0 | ppbv | 2.0 | 115-07-1 | <3.4 | 10/16/2015 | CW |
| Styrene | 0.8 | ppbv | 0.80 | 100-42-5 | 3.5 | 10/16/2015 | CW |
| Tertiary Butyl Alcohol | <0.80 | ppbv | 0.80 | 75-65-0 | <2.4 | 10/16/2015 | CW |
| 1,1,2,2-Tetrachloroethane | <0.80 | ppbv | 0.80 | 79-34-5 | <5.5 | 10/16/2015 | CW |
| Tetrachloroethylene | 1.0 | ppbv | 0.16 | 127-18-4 | 6.8 | 10/16/2015 | CW |
| Tetrahydrofuran | <0.80 | ppbv | 0.80 | 109-99-9 | <2.4 | 10/16/2015 | CW |
| Toluene | 33 | ppbv | 0.80 | 108-88-3 | 120 | 10/16/2015 | CW |
| trans-1,2-Dichloroethylene | <0.80 | ppbv | 0.80 | 156-60-5 | <3.2 | 10/16/2015 | CW |

**Brighton Analytical LLC**
2105 Pless Drive
Brighton, Michigan 48114
Phone: (810)229-7575 (810)229-8650
e-mail:bai-brighton@sbcglobal.net
MDNRE Certified #9404
NELAC Accredited #176507

Sample Date 10/6/2015
Submit Date 10/7/2015
Report Date: 10/20/2015

PM Environmental, Inc.
4080 W. 11 Mile Rd.
Berkley, MI 48072

BA Project # **36263**
BA Sample ID **CC00639**
Method **TO15**

Project Name: **Beacon & Bridge #8**
Project Number: **01-4982-0-003**
Sample ID: **SG-2**

| Analyte Name | ppbv Result | Units | RL | CAS Number | ug/m3 Result | Date Analyzed | Analyst |
|---|---|---|---|---|---|---|---|
| **Volatile TO15 Analysis** | | | | | | | |
| trans-1,3-Dichloropropene | <0.80 | ppbv | 0.80 | 10061-02-6 | <3.6 | 10/16/2015 | CW |
| 1,2,4-Trichlorobenzene | <0.80 | ppbv | 0.80 | 120-82-1 | <5.9 | 10/16/2015 | CW |
| 1,1,1-Trichloroethane | <0.80 | ppbv | 0.80 | 71-55-6 | <4.4 | 10/16/2015 | CW |
| 1,1,2-Trichloroethane | <0.80 | ppbv | 0.80 | 79-00-5 | <4.4 | 10/16/2015 | CW |
| Trichloroethylene | <0.16 | ppbv | 0.16 | 79-01-6 | <0.86 | 10/16/2015 | CW |
| Trichlorofluoromethane | 11 | ppbv | 0.80 | 75-69-4 | 64 | 10/16/2015 | CW |
| 1,1,2-Trichlorotrifluoroethane(Freon113) | <0.80 | ppbv | 0.80 | 76-13-1 | <6.1 | 10/16/2015 | CW |
| 1,3,5-Trimethylbenzene | 2.6 | ppbv | 0.80 | 108-67-8 | 13 | 10/16/2015 | CW |
| 1,2,4-Trimethylbenzene | 10 | ppbv | 0.80 | 95-63-6 | 50 | 10/16/2015 | CW |
| 2,2,4-Trimethylpentane | 360* | ppbv | 0.80 | 540-84-1 | 1700* | 10/16/2015 | CW |
| Vinyl Acetate | <0.80 | ppbv | 0.80 | 108-05-4 | <2.8 | 10/16/2015 | CW |
| Vinyl chloride | <0.80 | ppbv | 0.80 | 75-01-4 | <2.0 | 10/16/2015 | CW |
| Xylenes(total) | 33.9 | ppbv | 0.80 | 1330-20-7 | 144 | 10/16/2015 | CW |

RL=Reported detection limit for analytical method requested. Some compounds require special analytical methods to achieve MDNR designated target detection limits (TDL).

*Over range of curve

Released by [signature]
Date 10/20/15

**Brighton Analytical LLC**
2105 Pless Drive
Brighton, Michigan 48114
Phone: (810)229-7575 (810)229-8650
e-mail:bai-brighton@sbcglobal.net
MDNRE Certified #9404
NELAC Accredited #176507

Sample Date 10/6/2015
Submit Date 10/7/2015
Report Date: 10/20/2015

PM Environmental, Inc.
4080 W. 11 Mile Rd.
Berkley, MI 48072

BA Project # **36263**
BA Sample ID **CC00640**
Method **TO15**

Project Name: **Beacon & Bridge #8**
Project Number: **01-4982-0-003**
Sample ID: **SG-3**

| Analyte Name | ppbv Result | Units | RL | CAS Number | ug/m3 Result | Date Analyzed | Analyst |
|---|---|---|---|---|---|---|---|
| **Volatile TO15 Analysis** | | | | | | | |
| Acetone | 39 | ppbv | 0.80 | 67-64-1 | 93 | 10/16/2015 | CW |
| Benzene | 17 | ppbv | 0.80 | 71-43-2 | 54 | 10/16/2015 | CW |
| Benzyl Chloride | <0.80 | ppbv | 0.80 | 100-44-7 | <4.1 | 10/16/2015 | CW |
| Bromodichloromethane | <0.80 | ppbv | 0.80 | 75-27-4 | <5.4 | 10/16/2015 | CW |
| Bromoethene | <0.80 | ppbv | 0.80 | 593-60-2 | <3.5 | 10/16/2015 | CW |
| Bromoform | <0.80 | ppbv | 0.80 | 75-25-2 | <8.3 | 10/16/2015 | CW |
| Bromomethane | <0.80 | ppbv | 0.80 | 74-83-9 | <3.1 | 10/16/2015 | CW |
| 1,3-Butadiene | <0.80 | ppbv | 0.80 | 106-99-0 | <1.8 | 10/16/2015 | CW |
| Carbon disulfide | 37 | ppbv | 0.80 | 75-15-0 | 110 | 10/16/2015 | CW |
| Carbon tetrachloride | <0.80 | ppbv | 0.80 | 56-23-5 | <5.0 | 10/16/2015 | CW |
| Chlorobenzene | <0.80 | ppbv | 0.80 | 108-90-7 | <3.7 | 10/16/2015 | CW |
| Chloroethane | <0.80 | ppbv | 0.80 | 75-00-3 | <2.1 | 10/16/2015 | CW |
| Chloroform | 1.7 | ppbv | 0.80 | 67-66-3 | 8.2 | 10/16/2015 | CW |
| Chloromethane | <0.80 | ppbv | 0.80 | 74-87-3 | <1.7 | 10/16/2015 | CW |
| 3-Chloropropene | <0.80 | ppbv | 0.80 | 107-05-1 | <2.5 | 10/16/2015 | CW |
| 2-Chlorotoluene | <0.80 | ppbv | 0.80 | 95-49-8 | <4.1 | 10/16/2015 | CW |
| cis-1,2-Dichloroethylene | <0.80 | ppbv | 0.80 | 156-59-2 | <3.2 | 10/16/2015 | CW |
| cis-1,3-Dichloropropene | <0.80 | ppbv | 0.80 | 10061-01-5 | <3.6 | 10/16/2015 | CW |
| Cyclohexane | <0.80 | ppbv | 0.80 | 110-82-7 | <2.8 | 10/16/2015 | CW |
| Dibromochloromethane | <0.80 | ppbv | 0.80 | 124-48-1 | <6.8 | 10/16/2015 | CW |
| 1,2-Dibromoethane | <0.80 | ppbv | 0.80 | 106-93-4 | <6.1 | 10/16/2015 | CW |
| 1,3-Dichlorobenzene | <0.80 | ppbv | 0.80 | 541-73-1 | <4.8 | 10/16/2015 | CW |
| 1,2-Dichlorobenzene | <0.80 | ppbv | 0.80 | 95-50-1 | <4.8 | 10/16/2015 | CW |
| 1,4-Dichlorobenzene | <0.80 | ppbv | 0.80 | 106-46-7 | <4.8 | 10/16/2015 | CW |
| Dichlorodifluoromethane | 19 | ppbv | 0.80 | 75-71-8 | 92 | 10/16/2015 | CW |
| 1,2-Dichloroethane | <0.80 | ppbv | 0.80 | 107-06-2 | <3.2 | 10/16/2015 | CW |
| 1,1-Dichloroethane | <0.80 | ppbv | 0.80 | 75-34-3 | <3.2 | 10/16/2015 | CW |
| 1,1-Dichloroethylene | <0.80 | ppbv | 0.80 | 75-35-4 | <3.2 | 10/16/2015 | CW |

**Brighton Analytical LLC**
2105 Pless Drive
Brighton, Michigan 48114
Phone: (810)229-7575 (810)229-8650
e-mail:bai-brighton@sbcglobal.net
MDNRE Certified #9404
NELAC Accredited #176507

Sample Date 10/6/2015
Submit Date 10/7/2015
Report Date: 10/20/2015

PM Environmental, Inc.
4080 W. 11 Mile Rd.
Berkley, MI 48072

BA Project # **36263**
BA Sample ID **CC00640**
Method **TO15**

Project Name: **Beacon & Bridge #8**
Project Number: **01-4982-0-003**
Sample ID: **SG-3**

| Analyte Name | ppbv Result | Units | RL | CAS Number | ug/m3 Result | Date Analyzed | Analyst |
|---|---|---|---|---|---|---|---|
| **Volatile TO15 Analysis** | | | | | | | |
| 1,2-Dichloropropane | <0.80 | ppbv | 0.80 | 78-87-5 | <3.7 | 10/16/2015 | CW |
| Dichlorotetrafluoroethane(Freon114) | <0.80 | ppbv | 0.80 | 76-14-2 | <5.6 | 10/16/2015 | CW |
| 1,4-Dioxane | <0.80 | ppbv | 0.80 | 123-91-1 | <2.9 | 10/16/2015 | CW |
| Ethanol | <2.0 | ppbv | 2.0 | 64-17-5 | <3.8 | 10/16/2015 | CW |
| Ethyl Acetate | <0.80 | ppbv | 0.80 | 141-78-6 | <2.9 | 10/16/2015 | CW |
| Ethylbenzene | 8.9 | ppbv | 0.80 | 100-41-4 | 39 | 10/16/2015 | CW |
| 4-Ethyltoluene | 12 | ppbv | 0.80 | 622-96-8 | 57 | 10/16/2015 | CW |
| Heptane | 24 | ppbv | 0.80 | 142-82-5 | 100 | 10/16/2015 | CW |
| Hexachlorobutadiene | <0.80 | ppbv | 0.80 | 87-68-3 | <8.5 | 10/16/2015 | CW |
| Hexane | 83 | ppbv | 0.80 | 110-54-3 | 290 | 10/16/2015 | CW |
| 2-Hexanone | <0.80 | ppbv | 0.80 | 591-78-6 | <3.3 | 10/16/2015 | CW |
| Isopropyl Alcohol | <0.80 | ppbv | 0.80 | 67-63-0 | <2.0 | 10/16/2015 | CW |
| Methyl ethyl ketone | <0.80 | ppbv | 0.80 | 78-93-3 | <2.4 | 10/16/2015 | CW |
| Methyl Isobutyl Ketone | <0.80 | ppbv | 0.80 | 108-10-1 | <3.3 | 10/16/2015 | CW |
| Methyl Tert Butyl Ether | <0.80 | ppbv | 0.80 | 1634-04-4 | <2.9 | 10/16/2015 | CW |
| Methylene chloride | 53 | ppbv | 0.80 | 75-09-2 | 180 | 10/16/2015 | CW |
| Methylmethacrylate | <0.80 | ppbv | 0.80 | 80-62-6 | <3.3 | 10/16/2015 | CW |
| m,p-Xylene | 34 | ppbv | 0.80 | 108-38-3/106-42-3 | 150 | 10/16/2015 | CW |
| Naphthalene | <0.80 | ppbv | 0.80 | 91-20-3 | <4.2 | 10/16/2015 | CW |
| o-Xylene | 11 | ppbv | 0.80 | 95-47-6 | 47 | 10/16/2015 | CW |
| Propylene | <2.0 | ppbv | 2.0 | 115-07-1 | <3.4 | 10/16/2015 | CW |
| Styrene | 0.8 | ppbv | 0.80 | 100-42-5 | 3.5 | 10/16/2015 | CW |
| Tertiary Butyl Alcohol | <0.80 | ppbv | 0.80 | 75-65-0 | <2.4 | 10/16/2015 | CW |
| 1,1,2,2-Tetrachloroethane | <0.80 | ppbv | 0.80 | 79-34-5 | <5.5 | 10/16/2015 | CW |
| Tetrachloroethylene | 0.5 | ppbv | 0.16 | 127-18-4 | 3.6 | 10/16/2015 | CW |
| Tetrahydrofuran | <0.80 | ppbv | 0.80 | 109-99-9 | <2.4 | 10/16/2015 | CW |
| Toluene | 29 | ppbv | 0.80 | 108-88-3 | 110 | 10/16/2015 | CW |
| trans-1,2-Dichloroethylene | <0.80 | ppbv | 0.80 | 156-60-5 | <3.2 | 10/16/2015 | CW |

**Brighton Analytical LLC**
2105 Pless Drive
Brighton, Michigan 48114
Phone: (810)229-7575 (810)229-8650
e-mail:bai-brighton@sbcglobal.net
MDNRE Certified #9404
NELAC Accredited #176507

Sample Date 10/6/2015
Submit Date 10/7/2015
Report Date: 10/20/2015

PM Environmental, Inc.
4080 W. 11 Mile Rd.
Berkley, MI 48072

BA Project # **36263**
BA Sample ID **CC00640**
Method **TO15**

Project Name: **Beacon & Bridge #8**
Project Number: **01-4982-0-003**
Sample ID: **SG-3**

| Analyte Name | ppbv Result | Units | RL | CAS Number | ug/m3 Result | Date Analyzed | Analyst |
|---|---|---|---|---|---|---|---|
| **Volatile TO15 Analysis** | | | | | | | |
| trans-1,3-Dichloropropene | <0.80 | ppbv | 0.80 | 10061-02-6 | <3.6 | 10/16/2015 | CW |
| 1,2,4-Trichlorobenzene | <0.80 | ppbv | 0.80 | 120-82-1 | <5.9 | 10/16/2015 | CW |
| 1,1,2-Trichloroethane | <0.80 | ppbv | 0.80 | 79-00-5 | <4.4 | 10/16/2015 | CW |
| 1,1,1-Trichloroethane | <0.80 | ppbv | 0.80 | 71-55-6 | <4.4 | 10/16/2015 | CW |
| Trichloroethylene | 0.4 | ppbv | 0.16 | 79-01-6 | 2.1 | 10/16/2015 | CW |
| Trichlorofluoromethane | 0.8 | ppbv | 0.80 | 75-69-4 | 4.7 | 10/16/2015 | CW |
| 1,1,2-Trichlorotrifluoroethane(Freon113) | <0.80 | ppbv | 0.80 | 76-13-1 | <6.1 | 10/16/2015 | CW |
| 1,2,4-Trimethylbenzene | 8.9 | ppbv | 0.80 | 95-63-6 | 44 | 10/16/2015 | CW |
| 1,3,5-Trimethylbenzene | 2.6 | ppbv | 0.80 | 108-67-8 | 13 | 10/16/2015 | CW |
| 2,2,4-Trimethylpentane | 160 | ppbv | 0.80 | 540-84-1 | 750 | 10/16/2015 | CW |
| Vinyl Acetate | <0.80 | ppbv | 0.80 | 108-05-4 | <2.8 | 10/16/2015 | CW |
| Vinyl chloride | <0.80 | ppbv | 0.80 | 75-01-4 | <2.0 | 10/16/2015 | CW |
| Xylenes(total) | 45 | ppbv | 0.80 | 1330-20-7 | 197 | 10/16/2015 | CW |

RL=Reported detection limit for analytical method requested. Some compounds require special analytical methods to achieve MDNR designated target detection limits (TDL).

Released by

Date 10/20/15

**Brighton Analytical LLC**
2105 Pless Drive
Brighton, Michigan 48114
Phone: (810)229-7575 (810)229-8650
e-mail:bai-brighton@sbcglobal.net
MDNRE Certified #9404
NELAC Accredited #176507

Sample Date 10/6/2015
Submit Date 10/7/2015
Report Date: 10/20/2015

PM Environmental, Inc.
4080 W. 11 Mile Rd.
Berkley, MI 48072

BA Project # **36263**
BA Sample ID **CC00641**
Method **TO15**

Project Name: **Beacon & Bridge #8**
Project Number: **01-4982-0-003**
Sample ID: **SG-4**

| Analyte Name | ppbv Result | Units | RL | CAS Number | ug/m3 Result | Date Analyzed | Analyst |
|---|---|---|---|---|---|---|---|
| **Volatile TO15 Analysis** | | | | | | | |
| Acetone | <0.80 | ppbv | 0.80 | 67-64-1 | <1.9 | 10/16/2015 | CW |
| Benzene | <0.80 | ppbv | 0.80 | 71-43-2 | <2.6 | 10/16/2015 | CW |
| Benzyl Chloride | <0.80 | ppbv | 0.80 | 100-44-7 | <4.1 | 10/16/2015 | CW |
| Bromodichloromethane | <0.80 | ppbv | 0.80 | 75-27-4 | <5.4 | 10/16/2015 | CW |
| Bromoethene | <0.80 | ppbv | 0.80 | 593-60-2 | <3.5 | 10/16/2015 | CW |
| Bromoform | <0.80 | ppbv | 0.80 | 75-25-2 | <8.3 | 10/16/2015 | CW |
| Bromomethane | <0.80 | ppbv | 0.80 | 74-83-9 | <3.1 | 10/16/2015 | CW |
| 1,3-Butadiene | <0.80 | ppbv | 0.80 | 106-99-0 | <1.8 | 10/16/2015 | CW |
| Carbon disulfide | 9.9 | ppbv | 0.80 | 75-15-0 | 31 | 10/16/2015 | CW |
| Carbon tetrachloride | <0.80 | ppbv | 0.80 | 56-23-5 | <5.0 | 10/16/2015 | CW |
| Chlorobenzene | <0.80 | ppbv | 0.80 | 108-90-7 | <3.7 | 10/16/2015 | CW |
| Chloroethane | <0.80 | ppbv | 0.80 | 75-00-3 | <2.1 | 10/16/2015 | CW |
| Chloroform | 4.6 | ppbv | 0.80 | 67-66-3 | 23 | 10/16/2015 | CW |
| Chloromethane | <0.80 | ppbv | 0.80 | 74-87-3 | <1.7 | 10/16/2015 | CW |
| 3-Chloropropene | <0.80 | ppbv | 0.80 | 107-05-1 | <2.5 | 10/16/2015 | CW |
| 2-Chlorotoluene | <0.80 | ppbv | 0.80 | 95-49-8 | <4.1 | 10/16/2015 | CW |
| cis-1,2-Dichloroethylene | <0.80 | ppbv | 0.80 | 156-59-2 | <3.2 | 10/16/2015 | CW |
| cis-1,3-Dichloropropene | <0.80 | ppbv | 0.80 | 10061-01-5 | <3.6 | 10/16/2015 | CW |
| Cyclohexane | <0.80 | ppbv | 0.80 | 110-82-7 | <2.8 | 10/16/2015 | CW |
| Dibromochloromethane | <0.80 | ppbv | 0.80 | 124-48-1 | <6.8 | 10/16/2015 | CW |
| 1,2-Dibromoethane | <0.80 | ppbv | 0.80 | 106-93-4 | <6.1 | 10/16/2015 | CW |
| 1,3-Dichlorobenzene | <0.80 | ppbv | 0.80 | 541-73-1 | <4.8 | 10/16/2015 | CW |
| 1,2-Dichlorobenzene | <0.80 | ppbv | 0.80 | 95-50-1 | <4.8 | 10/16/2015 | CW |
| 1,4-Dichlorobenzene | <0.80 | ppbv | 0.80 | 106-46-7 | <4.8 | 10/16/2015 | CW |
| Dichlorodifluoromethane | <0.80 | ppbv | 0.80 | 75-71-8 | <4.0 | 10/16/2015 | CW |
| 1,2-Dichloroethane | <0.80 | ppbv | 0.80 | 107-06-2 | <3.2 | 10/16/2015 | CW |
| 1,1-Dichloroethane | <0.80 | ppbv | 0.80 | 75-34-3 | <3.2 | 10/16/2015 | CW |
| 1,1-Dichloroethylene | <0.80 | ppbv | 0.80 | 75-35-4 | <3.2 | 10/16/2015 | CW |

**Brighton Analytical LLC**
2105 Pless Drive
Brighton, Michigan 48114
Phone: (810)229-7575 (810)229-8650
e-mail:bai-brighton@sbcglobal.net
MDNRE Certified #9404
NELAC Accredited #176507

Sample Date 10/6/2015
Submit Date 10/7/2015
Report Date: 10/20/2015

PM Environmental, Inc.
4080 W. 11 Mile Rd.
Berkley, MI 48072

BA Project # **36263**
BA Sample ID **CC00641**
Method **TO15**

Project Name: **Beacon & Bridge #8**
Project Number: **01-4982-0-003**
Sample ID: **SG-4**

| Analyte Name | ppbv Result | Units | RL | CAS Number | ug/m3 Result | Date Analyzed | Analyst |
|---|---|---|---|---|---|---|---|
| **Volatile TO15 Analysis** | | | | | | | |
| 1,2-Dichloropropane | <0.80 | ppbv | 0.80 | 78-87-5 | <3.7 | 10/16/2015 | CW |
| Dichlorotetrafluoroethane(Freon114) | <0.80 | ppbv | 0.80 | 76-14-2 | <5.6 | 10/16/2015 | CW |
| 1,4-Dioxane | <0.80 | ppbv | 0.80 | 123-91-1 | <2.9 | 10/16/2015 | CW |
| Ethanol | <2.0 | ppbv | 2.0 | 64-17-5 | <3.8 | 10/16/2015 | CW |
| Ethyl Acetate | <0.80 | ppbv | 0.80 | 141-78-6 | <2.9 | 10/16/2015 | CW |
| Ethylbenzene | 8.4 | ppbv | 0.80 | 100-41-4 | 36 | 10/16/2015 | CW |
| 4-Ethyltoluene | 13 | ppbv | 0.80 | 622-96-8 | 63 | 10/16/2015 | CW |
| Heptane | 9.6 | ppbv | 0.80 | 142-82-5 | 39 | 10/16/2015 | CW |
| Hexachlorobutadiene | <0.80 | ppbv | 0.80 | 87-68-3 | <8.5 | 10/16/2015 | CW |
| Hexane | 86 | ppbv | 0.80 | 110-54-3 | 300 | 10/16/2015 | CW |
| 2-Hexanone | <0.80 | ppbv | 0.80 | 591-78-6 | <3.3 | 10/16/2015 | CW |
| Isopropyl Alcohol | <0.80 | ppbv | 0.80 | 67-63-0 | <2.0 | 10/16/2015 | CW |
| Methyl ethyl ketone | <0.80 | ppbv | 0.80 | 78-93-3 | <2.4 | 10/16/2015 | CW |
| Methyl Isobutyl Ketone | <0.80 | ppbv | 0.80 | 108-10-1 | <3.3 | 10/16/2015 | CW |
| Methyl Tert Butyl Ether | <0.80 | ppbv | 0.80 | 1634-04-4 | <2.9 | 10/16/2015 | CW |
| Methylene chloride | 130 | ppbv | 0.80 | 75-09-2 | 430 | 10/16/2015 | CW |
| Methylmethacrylate | <0.80 | ppbv | 0.80 | 80-62-6 | <3.3 | 10/16/2015 | CW |
| m,p-Xylene | 32 | ppbv | 0.80 | 108-38-3/106-42-3 | 140 | 10/16/2015 | CW |
| Naphthalene | <0.80 | ppbv | 0.80 | 91-20-3 | <4.2 | 10/16/2015 | CW |
| o-Xylene | 10 | ppbv | 0.80 | 95-47-6 | 44 | 10/16/2015 | CW |
| Propylene | 21 EST | ppbv | 2.0 | 115-07-1 | 36 EST | 10/16/2015 | CW |
| Styrene | 0.8 | ppbv | 0.80 | 100-42-5 | 3.4 | 10/16/2015 | CW |
| Tertiary Butyl Alcohol | <0.80 | ppbv | 0.80 | 75-65-0 | <2.4 | 10/16/2015 | CW |
| 1,1,2,2-Tetrachloroethane | <0.80 | ppbv | 0.80 | 79-34-5 | <5.5 | 10/16/2015 | CW |
| Tetrachloroethylene | 0.7 | ppbv | 0.16 | 127-18-4 | 4.5 | 10/16/2015 | CW |
| Tetrahydrofuran | <0.80 | ppbv | 0.80 | 109-99-9 | <2.4 | 10/16/2015 | CW |
| Toluene | 17 | ppbv | 0.80 | 108-88-3 | 66 | 10/16/2015 | CW |
| trans-1,2-Dichloroethylene | <0.80 | ppbv | 0.80 | 156-60-5 | <3.2 | 10/16/2015 | CW |

**Brighton Analytical LLC**
2105 Pless Drive
Brighton, Michigan 48114
Phone: (810)229-7575 (810)229-8650
e-mail:bai-brighton@sbcglobal.net
MDNRE Certified #9404
NELAC Accredited #176507

Sample Date 10/6/2015
Submit Date 10/7/2015
Report Date: 10/20/2015

PM Environmental, Inc.
4080 W. 11 Mile Rd.
Berkley, MI 48072

BA Project # **36263**
BA Sample ID **CC00641**
Method **TO15**

Project Name: **Beacon & Bridge #8**
Project Number: **01-4982-0-003**
Sample ID: **SG-4**

| Analyte Name | ppbv Result | Units | RL | CAS Number | ug/m3 Result | Date Analyzed | Analyst |
|---|---|---|---|---|---|---|---|
| **Volatile TO15 Analysis** | | | | | | | |
| trans-1,3-Dichloropropene | <0.80 | ppbv | 0.80 | 10061-02-6 | <3.6 | 10/16/2015 | CW |
| 1,2,4-Trichlorobenzene | <0.80 | ppbv | 0.80 | 120-82-1 | <5.9 | 10/16/2015 | CW |
| 1,1,2-Trichloroethane | <0.80 | ppbv | 0.80 | 79-00-5 | <4.4 | 10/16/2015 | CW |
| 1,1,1-Trichloroethane | <0.80 | ppbv | 0.80 | 71-55-6 | <4.4 | 10/16/2015 | CW |
| Trichloroethylene | 0.6 | ppbv | 0.16 | 79-01-6 | 3.4 | 10/16/2015 | CW |
| Trichlorofluoromethane | 1.1 | ppbv | 0.80 | 75-69-4 | 6.3 | 10/16/2015 | CW |
| 1,1,2-Trichlorotrifluoroethane(Freon113) | 1.0 | ppbv | 0.80 | 76-13-1 | 7.8 | 10/16/2015 | CW |
| 1,2,4-Trimethylbenzene | 8.5 | ppbv | 0.80 | 95-63-6 | 42 | 10/16/2015 | CW |
| 1,3,5-Trimethylbenzene | 2.8 | ppbv | 0.80 | 108-67-8 | 14 | 10/16/2015 | CW |
| 2,2,4-Trimethylpentane | 47 | ppbv | 0.80 | 540-84-1 | 220 | 10/16/2015 | CW |
| Vinyl Acetate | <0.80 | ppbv | 0.80 | 108-05-4 | <2.8 | 10/16/2015 | CW |
| Vinyl chloride | <0.80 | ppbv | 0.80 | 75-01-4 | <2.0 | 10/16/2015 | CW |
| Xylenes(total) | 42 | ppbv | 0.80 | 1330-20-7 | 184 | 10/16/2015 | CW |

RL=Reported detection limit for analytical method requested. Some compounds require special analytical methods to achieve MDNR designated target detection limits (TDL).

EST = Estimated concentration

Released by Allison Tapolski
Date 10/20/15

**Brighton Analytical LLC**
2105 Pless Drive
Brighton, Michigan 48114
Phone: (810)229-7575 (810)229-8650
e-mail:bai-brighton@sbcglobal.net
MDNRE Certified #9404
NELAC Accredited #176507

Sample Date 10/6/2015
Submit Date 10/7/2015
Report Date: 10/20/2015

PM Environmental, Inc.
4080 W. 11 Mile Rd.
Berkley, MI 48072

BA Project # **36263**
BA Sample ID **CC00642**
Method **TO15**

Project Name: **Beacon & Bridge #8**
Project Number: **01-4982-0-003**
Sample ID: **SG-5**

| Analyte Name | ppbv Result | Units | RL | CAS Number | ug/m3 Result | Date Analyzed | Analyst |
|---|---|---|---|---|---|---|---|
| **Volatile TO15 Analysis** | | | | | | | |
| Acetone | 27 | ppbv | 0.80 | 67-64-1 | 63 | 10/16/2015 | CW |
| Benzene | 24 | ppbv | 0.80 | 71-43-2 | 76 | 10/16/2015 | CW |
| Benzyl Chloride | <0.80 | ppbv | 0.80 | 100-44-7 | <4.1 | 10/16/2015 | CW |
| Bromodichloromethane | <0.80 | ppbv | 0.80 | 75-27-4 | <5.4 | 10/16/2015 | CW |
| Bromoethene | <0.80 | ppbv | 0.80 | 593-60-2 | <3.5 | 10/16/2015 | CW |
| Bromoform | <0.80 | ppbv | 0.80 | 75-25-2 | <8.3 | 10/16/2015 | CW |
| Bromomethane | <0.80 | ppbv | 0.80 | 74-83-9 | <3.1 | 10/16/2015 | CW |
| 1,3-Butadiene | <0.80 | ppbv | 0.80 | 106-99-0 | <1.8 | 10/16/2015 | CW |
| Carbon disulfide | <0.80 | ppbv | 0.80 | 75-15-0 | <2.5 | 10/16/2015 | CW |
| Carbon tetrachloride | <0.80 | ppbv | 0.80 | 56-23-5 | <5.0 | 10/16/2015 | CW |
| Chlorobenzene | <0.80 | ppbv | 0.80 | 108-90-7 | <3.7 | 10/16/2015 | CW |
| Chloroethane | <0.80 | ppbv | 0.80 | 75-00-3 | <2.1 | 10/16/2015 | CW |
| Chloroform | 1.7 | ppbv | 0.80 | 67-66-3 | 8.4 | 10/16/2015 | CW |
| Chloromethane | <0.80 | ppbv | 0.80 | 74-87-3 | <1.7 | 10/16/2015 | CW |
| 3-Chloropropene | <0.80 | ppbv | 0.80 | 107-05-1 | <2.5 | 10/16/2015 | CW |
| 2-Chlorotoluene | <0.80 | ppbv | 0.80 | 95-49-8 | <4.1 | 10/16/2015 | CW |
| cis-1,2-Dichloroethylene | <0.80 | ppbv | 0.80 | 156-59-2 | <3.2 | 10/16/2015 | CW |
| cis-1,3-Dichloropropene | <0.80 | ppbv | 0.80 | 10061-01-5 | <3.6 | 10/16/2015 | CW |
| Cyclohexane | <0.80 | ppbv | 0.80 | 110-82-7 | <2.8 | 10/16/2015 | CW |
| Dibromochloromethane | <0.80 | ppbv | 0.80 | 124-48-1 | <6.8 | 10/16/2015 | CW |
| 1,2-Dibromoethane | <0.80 | ppbv | 0.80 | 106-93-4 | <6.1 | 10/16/2015 | CW |
| 1,3-Dichlorobenzene | <0.80 | ppbv | 0.80 | 541-73-1 | <4.8 | 10/16/2015 | CW |
| 1,2-Dichlorobenzene | <0.80 | pphv | 0.80 | 95-50-1 | <4.8 | 10/16/2015 | CW |
| 1,4-Dichlorobenzene | <0.80 | ppbv | 0.80 | 106-46-7 | <4.8 | 10/16/2015 | CW |
| Dichlorodifluoromethane | <0.80 | ppbv | 0.80 | 75-71-8 | <4.0 | 10/16/2015 | CW |
| 1,2-Dichloroethane | <0.80 | ppbv | 0.80 | 107-06-2 | <3.2 | 10/16/2015 | CW |
| 1,1-Dichloroethane | <0.80 | ppbv | 0.80 | 75-34-3 | <3.2 | 10/16/2015 | CW |
| 1,1-Dichloroethylene | <0.80 | ppbv | 0.80 | 75-35-4 | <3.2 | 10/16/2015 | CW |

**Brighton Analytical LLC**
2105 Pless Drive
Brighton, Michigan 48114
Phone: (810)229-7575 (810)229-8650
e-mail:bai-brighton@sbcglobal.net
MDNRE Certified #9404
NELAC Accredited #176507

Sample Date 10/6/2015
Submit Date 10/7/2015
Report Date: 10/20/2015

PM Environmental, Inc.
4080 W. 11 Mile Rd.
Berkley, MI 48072

BA Project # **36263**
BA Sample ID **CC00642**
Method **TO15**

Project Name: **Beacon & Bridge #8**
Project Number: **01-4982-0-003**
Sample ID: **SG-5**

| Analyte Name | ppbv Result | Units | RL | CAS Number | ug/m3 Result | Date Analyzed | Analyst |
|---|---|---|---|---|---|---|---|
| **Volatile TO15 Analysis** | | | | | | | |
| 1,2-Dichloropropane | <0.80 | ppbv | 0.80 | 78-87-5 | <3.7 | 10/16/2015 | CW |
| Dichlorotetrafluoroethane(Freon114) | <0.80 | ppbv | 0.80 | 76-14-2 | <5.6 | 10/16/2015 | CW |
| 1,4-Dioxane | <0.80 | ppbv | 0.80 | 123-91-1 | <2.9 | 10/16/2015 | CW |
| Ethanol | <2.0 | ppbv | 2.0 | 64-17-5 | <3.8 | 10/16/2015 | CW |
| Ethyl Acetate | <0.80 | ppbv | 0.80 | 141-78-6 | <2.9 | 10/16/2015 | CW |
| Ethylbenzene | 4.2 | ppbv | 0.80 | 100-41-4 | 18 | 10/16/2015 | CW |
| 4-Ethyltoluene | 11 | ppbv | 0.80 | 622-96-8 | 54 | 10/16/2015 | CW |
| Heptane | 10 | ppbv | 0.80 | 142-82-5 | 41 | 10/16/2015 | CW |
| Hexachlorobutadiene | <0.80 | ppbv | 0.80 | 87-68-3 | <8.5 | 10/16/2015 | CW |
| Hexane | 110 | ppbv | 0.80 | 110-54-3 | 380 | 10/16/2015 | CW |
| 2-Hexanone | <0.80 | ppbv | 0.80 | 591-78-6 | <3.3 | 10/16/2015 | CW |
| Isopropyl Alcohol | <0.80 | ppbv | 0.80 | 67-63-0 | <2.0 | 10/16/2015 | CW |
| Methyl ethyl ketone | <0.80 | ppbv | 0.80 | 78-93-3 | <2.4 | 10/16/2015 | CW |
| Methyl Isobutyl Ketone | <0.80 | ppbv | 0.80 | 108-10-1 | <3.3 | 10/16/2015 | CW |
| Methyl Tert Butyl Ether | <0.80 | ppbv | 0.80 | 1634-04-4 | <2.9 | 10/16/2015 | CW |
| Methylene chloride | 19 | ppbv | 0.80 | 75-09-2 | 65 | 10/16/2015 | CW |
| Methylmethacrylate | <0.80 | ppbv | 0.80 | 80-62-6 | <3.3 | 10/16/2015 | CW |
| m,p-Xylene | 18 | ppbv | 0.80 | 108-38-3/106-42-3 | 77 | 10/16/2015 | CW |
| Naphthalene | <0.80 | ppbv | 0.80 | 91-20-3 | <4.2 | 10/16/2015 | CW |
| o-Xylene | 7.0 | ppbv | 0.80 | 95-47-6 | 33 | 10/16/2015 | CW |
| Propylene | <2.0 | ppbv | 2.0 | 115-07-1 | <3.4 | 10/16/2015 | CW |
| Styrene | 0.9 | ppbv | 0.80 | 100-42-5 | 3.9 | 10/16/2015 | CW |
| Tertiary Butyl Alcohol | <0.80 | ppbv | 0.80 | 75-65-0 | <2.4 | 10/16/2015 | CW |
| 1,1,2,2-Tetrachloroethane | <0.80 | ppbv | 0.80 | 79-34-5 | <5.5 | 10/16/2015 | CW |
| Tetrachloroethylene | 0.3 | ppbv | 0.16 | 127-18-4 | 2.1 | 10/16/2015 | CW |
| Tetrahydrofuran | <0.80 | ppbv | 0.80 | 109-99-9 | <2.4 | 10/16/2015 | CW |
| Toluene | 14 | ppbv | 0.80 | 108-88-3 | 51 | 10/16/2015 | CW |
| trans-1,2-Dichloroethylene | <0.80 | ppbv | 0.80 | 156-60-5 | <3.2 | 10/16/2015 | CW |

**Brighton Analytical LLC**
2105 Pless Drive
Brighton, Michigan 48114
Phone: (810)229-7575 (810)229-8650
e-mail:bai-brighton@sbcglobal.net
MDNRE Certified #9404
NELAC Accredited #176507

Sample Date 10/6/2015
Submit Date 10/7/2015
Report Date: 10/20/2015

PM Environmental, Inc.
4080 W. 11 Mile Rd.
Berkley, MI 48072

BA Project # **36263**
BA Sample ID **CC00642**
Method **TO15**

Project Name: **Beacon & Bridge #8**
Project Number: **01-4982-0-003**
Sample ID: **SG-5**

| Analyte Name | ppbv Result | Units | RL | CAS Number | ug/m3 Result | Date Analyzed | Analyst |
|---|---|---|---|---|---|---|---|
| **Volatile TO15 Analysis** | | | | | | | |
| trans-1,3-Dichloropropene | <0.80 | ppbv | 0.80 | 10061-02-6 | <3.6 | 10/16/2015 | CW |
| 1,2,4-Trichlorobenzene | <0.80 | ppbv | 0.80 | 120-82-1 | <5.9 | 10/16/2015 | CW |
| 1,1,1-Trichloroethane | <0.80 | ppbv | 0.80 | 71-55-6 | <4.4 | 10/16/2015 | CW |
| 1,1,2-Trichloroethane | <0.80 | ppbv | 0.80 | 79-00-5 | <4.4 | 10/16/2015 | CW |
| Trichloroethylene | 0.5 | ppbv | 0.16 | 79-01-6 | 2.9 | 10/16/2015 | CW |
| Trichlorofluoromethane | <0.80 | ppbv | 0.80 | 75-69-4 | <4.5 | 10/16/2015 | CW |
| 1,1,2-Trichlorotrifluoroethane(Freon113) | <0.80 | ppbv | 0.80 | 76-13-1 | <6.1 | 10/16/2015 | CW |
| 1,2,4-Trimethylbenzene | 8.6 | ppbv | 0.80 | 95-63-6 | 42 | 10/16/2015 | CW |
| 1,3,5-Trimethylbenzene | 2.6 | ppbv | 0.80 | 108-67-8 | 13 | 10/16/2015 | CW |
| 2,2,4-Trimethylpentane | 33 | ppbv | 0.80 | 540-84-1 | 150 | 10/16/2015 | CW |
| Vinyl Acetate | <0.80 | ppbv | 0.80 | 108-05-4 | <2.8 | 10/16/2015 | CW |
| Vinyl chloride | <0.80 | ppbv | 0.80 | 75-01-4 | <2.0 | 10/16/2015 | CW |
| Xylenes(total) | 25 | ppbv | 0.80 | 1330-20-7 | 107 | 10/16/2015 | CW |

RL=Reported detection limit for analytical method requested. Some compounds require special analytical methods to achieve MDNR designated target detection limits (TDL).

Released by _____
Date 10/20/15

**Brighton Analytical LLC**
2105 Pless Drive
Brighton, Michigan 48114
Phone: (810)229-7575 (810)229-8650
e-mail:bai-brighton@sbcglobal.net
MDNRE Certified #9404
NELAC Accredited #176507

Sample Date 10/6/2015
Submit Date 10/7/2015
Report Date: 10/20/2015

PM Environmental, Inc.
4080 W. 11 Mile Rd.
Berkley, MI 48072

BA Project # **36263**
BA Sample ID **CC00643**
Method **TO15**

Project Name: **Beacon & Bridge #8**
Project Number: **01-4982-0-003**
Sample ID: **SG-6**

| Analyte Name | ppbv Result | Units | RL | CAS Number | ug/m3 Result | Date Analyzed | Analyst |
|---|---|---|---|---|---|---|---|
| **Volatile TO15 Analysis** | | | | | | | |
| Acetone | 77 | ppbv | 0.80 | 67-64-1 | 180 | 10/16/2015 | CW |
| Benzene | <0.80 | ppbv | 0.80 | 71-43-2 | <2.6 | 10/16/2015 | CW |
| Benzyl Chloride | <0.80 | ppbv | 0.80 | 100-44-7 | <4.1 | 10/16/2015 | CW |
| Bromodichloromethane | <0.80 | ppbv | 0.80 | 75-27-4 | <5.4 | 10/16/2015 | CW |
| Bromoethene | <0.80 | ppbv | 0.80 | 593-60-2 | <3.5 | 10/16/2015 | CW |
| Bromoform | <0.80 | ppbv | 0.80 | 75-25-2 | <8.3 | 10/16/2015 | CW |
| Bromomethane | <0.80 | ppbv | 0.80 | 74-83-9 | <3.1 | 10/16/2015 | CW |
| 1,3-Butadiene | <0.80 | ppbv | 0.80 | 106-99-0 | <1.8 | 10/16/2015 | CW |
| Carbon disulfide | <0.80 | ppbv | 0.80 | 75-15-0 | <2.5 | 10/16/2015 | CW |
| Carbon tetrachloride | <0.80 | ppbv | 0.80 | 56-23-5 | <5.0 | 10/16/2015 | CW |
| Chlorobenzene | <0.80 | ppbv | 0.80 | 108-90-7 | <3.7 | 10/16/2015 | CW |
| Chloroethane | <0.80 | ppbv | 0.80 | 75-00-3 | <2.1 | 10/16/2015 | CW |
| Chloroform | 4.1 | ppbv | 0.80 | 67-66-3 | 20 | 10/16/2015 | CW |
| Chloromethane | <0.80 | ppbv | 0.80 | 74-87-3 | <1.7 | 10/16/2015 | CW |
| 3-Chloropropene | <0.80 | ppbv | 0.80 | 107-05-1 | <2.5 | 10/16/2015 | CW |
| 2-Chlorotoluene | <0.80 | ppbv | 0.80 | 95-49-8 | <4.1 | 10/16/2015 | CW |
| cis-1,2-Dichloroethylene | <0.80 | ppbv | 0.80 | 156-59-2 | <3.2 | 10/16/2015 | CW |
| cis-1,3-Dichloropropene | <0.80 | ppbv | 0.80 | 10061-01-5 | <3.6 | 10/16/2015 | CW |
| Cyclohexane | <0.80 | ppbv | 0.80 | 110-82-7 | <2.8 | 10/16/2015 | CW |
| Dibromochloromethane | <0.80 | ppbv | 0.80 | 124-48-1 | <6.8 | 10/16/2015 | CW |
| 1,2-Dibromoethane | <0.80 | ppbv | 0.80 | 106-93-4 | <6.1 | 10/16/2015 | CW |
| 1,4-Dichlorobenzene | <0.80 | ppbv | 0.80 | 106-46-7 | <4.8 | 10/16/2015 | CW |
| 1,2-Dichlorobenzene | <0.80 | ppbv | 0.80 | 95-50-1 | <4.8 | 10/16/2015 | CW |
| 1,3-Dichlorobenzene | <0.80 | ppbv | 0.80 | 541-73-1 | <4.8 | 10/16/2015 | CW |
| Dichlorodifluoromethane | <0.80 | ppbv | 0.80 | 75-71-8 | <4.0 | 10/16/2015 | CW |
| 1,2-Dichloroethane | <0.80 | ppbv | 0.80 | 107-06-2 | <3.2 | 10/16/2015 | CW |
| 1,1-Dichloroethane | <0.80 | ppbv | 0.80 | 75-34-3 | <3.2 | 10/16/2015 | CW |
| 1,1-Dichloroethylene | <0.80 | ppbv | 0.80 | 75-35-4 | <3.2 | 10/16/2015 | CW |

**Brighton Analytical LLC**
2105 Pless Drive
Brighton, Michigan 48114
Phone: (810)229-7575 (810)229-8650
e-mail:bai-brighton@sbcglobal.net
MDNRE Certified #9404
NELAC Accredited #176507

Sample Date 10/6/2015
Submit Date 10/7/2015
Report Date: 10/20/2015

PM Environmental, Inc.
4080 W. 11 Mile Rd.
Berkley, MI 48072

BA Project # **36263**
BA Sample ID **CC00643**
Method **TO15**

Project Name: **Beacon & Bridge #8**
Project Number: **01-4982-0-003**
Sample ID: **SG-6**

| Analyte Name | ppbv Result | Units | RL | CAS Number | ug/m3 Result | Date Analyzed | Analyst |
|---|---|---|---|---|---|---|---|
| **Volatile TO15 Analysis** | | | | | | | |
| 1,2-Dichloropropane | <0.80 | ppbv | 0.80 | 78-87-5 | <3.7 | 10/16/2015 | CW |
| Dichlorotetrafluoroethane(Freon114) | <0.80 | ppbv | 0.80 | 76-14-2 | <5.6 | 10/16/2015 | CW |
| 1,4-Dioxane | <0.80 | ppbv | 0.80 | 123-91-1 | <2.9 | 10/16/2015 | CW |
| Ethanol | <2.0 | ppbv | 2.0 | 64-17-5 | <3.8 | 10/16/2015 | CW |
| Ethyl Acetate | <0.80 | ppbv | 0.80 | 141-78-6 | <2.9 | 10/16/2015 | CW |
| Ethylbenzene | 6.2 | ppbv | 0.80 | 100-41-4 | 27 | 10/16/2015 | CW |
| 4-Ethyltoluene | 14 | ppbv | 0.80 | 622-96-8 | 67 | 10/16/2015 | CW |
| Heptane | 16 | ppbv | 0.80 | 142-82-5 | 66 | 10/16/2015 | CW |
| Hexachlorobutadiene | <0.80 | ppbv | 0.80 | 87-68-3 | <8.5 | 10/16/2015 | CW |
| Hexane | 170 | ppbv | 0.80 | 110-54-3 | 600 | 10/16/2015 | CW |
| 2-Hexanone | <0.80 | ppbv | 0.80 | 591-78-6 | <3.3 | 10/16/2015 | CW |
| Isopropyl Alcohol | <0.80 | ppbv | 0.80 | 67-63-0 | <2.0 | 10/16/2015 | CW |
| Methyl ethyl ketone | <0.80 | ppbv | 0.80 | 78-93-3 | <2.4 | 10/16/2015 | CW |
| Methyl Isobutyl Ketone | <0.80 | ppbv | 0.80 | 108-10-1 | <3.3 | 10/16/2015 | CW |
| Methyl Tert Butyl Ether | <0.80 | ppbv | 0.80 | 1634-04-4 | <2.9 | 10/16/2015 | CW |
| Methylene chloride | 41 | ppbv | 0.80 | 75-09-2 | 140 | 10/16/2015 | CW |
| Methylmethacrylate | <0.80 | ppbv | 0.80 | 80-62-6 | <3.3 | 10/16/2015 | CW |
| m,p-Xylene | 24 | ppbv | 0.80 | 108-38-3/106-42-3 | 100 | 10/16/2015 | CW |
| Naphthalene | <0.80 | ppbv | 0.80 | 91-20-3 | <4.2 | 10/16/2015 | CW |
| o-Xylene | 9.6 | ppbv | 0.80 | 95-47-6 | 42 | 10/16/2015 | CW |
| Propylene | <2.0 | ppbv | 2.0 | 115-07-1 | <3.4 | 10/16/2015 | CW |
| Styrene | 1.5 | ppbv | 0.80 | 100-42-5 | 6.2 | 10/16/2015 | CW |
| Tertiary Butyl Alcohol | <0.80 | ppbv | 0.80 | 75-65-0 | <2.4 | 10/16/2015 | CW |
| 1,1,2,2-Tetrachloroethane | <0.80 | ppbv | 0.80 | 79-34-5 | <5.5 | 10/16/2015 | CW |
| Tetrachloroethylene | 0.7 | ppbv | 0.16 | 127-18-4 | 5.0 | 10/16/2015 | CW |
| Tetrahydrofuran | <0.80 | ppbv | 0.80 | 109-99-9 | <2.4 | 10/16/2015 | CW |
| Toluene | 31 | ppbv | 0.80 | 108-88-3 | 120 | 10/16/2015 | CW |
| trans-1,2-Dichloroethylene | <0.80 | ppbv | 0.80 | 156-60-5 | <3.2 | 10/16/2015 | CW |

**Brighton Analytical LLC**
2105 Pless Drive
Brighton, Michigan 48114
Phone: (810)229-7575 (810)229-8650
e-mail:bai-brighton@sbcglobal.net
MDNRE Certified #9404
NELAC Accredited #176507

Sample Date 10/6/2015
Submit Date 10/7/2015
Report Date: 10/20/2015

PM Environmental, Inc.
4080 W. 11 Mile Rd.
Berkley, MI 48072

BA Project # **36263**
BA Sample ID **CC00643**
Method **TO15**

Project Name: **Beacon & Bridge #8**
Project Number: **01-4982-0-003**
Sample ID: **SG-6**

| Analyte Name | ppbv Result | Units | RL | CAS Number | ug/m3 Result | Date Analyzed | Analyst |
|---|---|---|---|---|---|---|---|
| **Volatile TO15 Analysis** | | | | | | | |
| trans-1,3-Dichloropropene | <0.80 | ppbv | 0.80 | 10061-02-6 | <3.6 | 10/16/2015 | CW |
| 1,2,4-Trichlorobenzene | <0.80 | ppbv | 0.80 | 120-82-1 | <5.9 | 10/16/2015 | CW |
| 1,1,1-Trichloroethane | <0.80 | ppbv | 0.80 | 71-55-6 | <4.4 | 10/16/2015 | CW |
| 1,1,2-Trichloroethane | <0.80 | ppbv | 0.80 | 79-00-5 | <4.4 | 10/16/2015 | CW |
| Trichloroethylene | 0.6 | ppbv | 0.16 | 79-01-6 | 3.3 | 10/16/2015 | CW |
| Trichlorofluoromethane | 18 | ppbv | 0.80 | 75-69-4 | 100 | 10/16/2015 | CW |
| 1,1,2-Trichlorotrifluoroethane(Freon113) | 0.8 | ppbv | 0.80 | 76-13-1 | 6.4 | 10/16/2015 | CW |
| 1,3,5-Trimethylbenzene | 3.8 | ppbv | 0.80 | 108-67-8 | 18 | 10/16/2015 | CW |
| 1,2,4-Trimethylbenzene | 12 | ppbv | 0.80 | 95-63-6 | 59 | 10/16/2015 | CW |
| 2,2,4-Trimethylpentane | 43 | ppbv | 0.80 | 540-84-1 | 200 | 10/16/2015 | CW |
| Vinyl Acetate | <0.80 | ppbv | 0.80 | 108-05-4 | <2.8 | 10/16/2015 | CW |
| Vinyl chloride | <0.80 | ppbv | 0.80 | 75-01-4 | <2.0 | 10/16/2015 | CW |
| Xylenes(total) | 33.6 | ppbv | 0.80 | 1330-20-7 | 142 | 10/16/2015 | CW |

RL=Reported detection limit for analytical method requested. Some compounds require special analytical methods to achieve MDNR designated target detection limits (TDL).

Released by [signature]
Date 10/20/15

**Brighton Analytical LLC**
2105 Pless Drive
Brighton, Michigan 48114
Phone: (810)229-7575 (810)229-8650
e-mail:bai-brighton@sbcglobal.net
MDNRE Certified #9404
NELAC Accredited #176507

Sample Date 10/6/2015
Submit Date 10/7/2015
Report Date: 10/20/2015

PM Environmental, Inc.
4080 W. 11 Mile Rd.
Berkley, MI 48072

BA Project # **36263**
BA Sample ID **CC00644**
Method **TO15**

Project Name: **Beacon & Bridge #8**
Project Number: **01-4982-0-003**
Sample ID: **SG-7S**

| Analyte Name | ppbv Result | Units | RL | CAS Number | ug/m3 Result | Date Analyzed | Analyst |
|---|---|---|---|---|---|---|---|
| **Volatile TO15 Analysis** | | | | | | | |
| Acetone | <16 | ppbv | 16 | 67-64-1 | <38 | 10/16/2015 | CW |
| Benzene | 1700 | ppbv | 16 | 71-43-2 | 5400 | 10/16/2015 | CW |
| Benzyl Chloride | <16 | ppbv | 16 | 100-44-7 | <82 | 10/16/2015 | CW |
| Bromodichloromethane | <16 | ppbv | 16 | 75-27-4 | <108 | 10/16/2015 | CW |
| Bromoethene | <16 | ppbv | 16 | 593-60-2 | <70 | 10/16/2015 | CW |
| Bromoform | <16 | ppbv | 16 | 75-25-2 | <166 | 10/16/2015 | CW |
| Bromomethane | <16 | ppbv | 16 | 74-83-9 | <62 | 10/16/2015 | CW |
| 1,3-Butadiene | <16 | ppbv | 16 | 106-99-0 | <36 | 10/16/2015 | CW |
| Carbon disulfide | <16 | ppbv | 16 | 75-15-0 | <50 | 10/16/2015 | CW |
| Carbon tetrachloride | <16 | ppbv | 16 | 56-23-5 | <100 | 10/16/2015 | CW |
| Chlorobenzene | <16 | ppbv | 16 | 108-90-7 | <74 | 10/16/2015 | CW |
| Chloroethane | <16 | ppbv | 16 | 75-00-3 | <42 | 10/16/2015 | CW |
| Chloroform | 190 | ppbv | 16 | 67-66-3 | 940 | 10/16/2015 | CW |
| Chloromethane | <16 | ppbv | 16 | 74-87-3 | <34 | 10/16/2015 | CW |
| 3-Chloropropene | <16 | ppbv | 16 | 107-05-1 | <50 | 10/16/2015 | CW |
| 2-Chlorotoluene | <16 | ppbv | 16 | 95-49-8 | <82 | 10/16/2015 | CW |
| cis-1,2-Dichloroethylene | <16 | ppbv | 16 | 156-59-2 | <64 | 10/16/2015 | CW |
| cis-1,3-Dichloropropene | <16 | ppbv | 16 | 10061-01-5 | <72 | 10/16/2015 | CW |
| Cyclohexane | <16 | ppbv | 16 | 110-82-7 | <56 | 10/16/2015 | CW |
| Dibromochloromethane | <16 | ppbv | 16 | 124-48-1 | <136 | 10/16/2015 | CW |
| 1,2-Dibromoethane | <16 | ppbv | 16 | 106-93-4 | <122 | 10/16/2015 | CW |
| 1,2-Dichlorobenzene | <16 | ppbv | 16 | 95-50-1 | <96 | 10/16/2015 | CW |
| 1,3-Dichlorobenzene | <16 | ppbv | 16 | 541-73-1 | <96 | 10/16/2015 | CW |
| 1,4-Dichlorobenzene | <16 | ppbv | 16 | 106-46-7 | <96 | 10/16/2015 | CW |
| Dichlorodifluoromethane | <16 | ppbv | 16 | 75-71-8 | <80 | 10/16/2015 | CW |
| 1,2-Dichloroethane | <16 | ppbv | 16 | 107-06-2 | <64 | 10/16/2015 | CW |
| 1,1-Dichloroethane | <16 | ppbv | 16 | 75-34-3 | <64 | 10/16/2015 | CW |
| 1,1-Dichloroethylene | <16 | ppbv | 16 | 75-35-4 | <64 | 10/16/2015 | CW |

**Brighton Analytical LLC**
2105 Pless Drive
Brighton, Michigan 48114
Phone: (810)229-7575 (810)229-8650
e-mail:bai-brighton@sbcglobal.net
MDNRE Certified #9404
NELAC Accredited #176507

Sample Date 10/6/2015
Submit Date 10/7/2015
Report Date: 10/20/2015

PM Environmental, Inc.
4080 W. 11 Mile Rd.
Berkley, MI 48072

BA Project # **36263**
BA Sample ID **CC00644**
Method **TO15**

Project Name: **Beacon & Bridge #8**
Project Number: **01-4982-0-003**
Sample ID: **SG-7S**

| Analyte Name | ppbv Result | Units | RL | CAS Number | ug/m3 Result | Date Analyzed | Analyst |
|---|---|---|---|---|---|---|---|
| **Volatile TO15 Analysis** | | | | | | | |
| 1,2-Dichloropropane | <16 | ppbv | 16 | 78-87-5 | <74 | 10/16/2015 | CW |
| Dichlorotetrafluoroethane(Freon114) | <16 | ppbv | 16 | 76-14-2 | <112 | 10/16/2015 | CW |
| 1,4-Dioxane | <16 | ppbv | 16 | 123-91-1 | <58 | 10/16/2015 | CW |
| Ethanol | <40 | ppbv | 40 | 64-17-5 | <76 | 10/16/2015 | CW |
| Ethyl Acetate | <16 | ppbv | 16 | 141-78-6 | <58 | 10/16/2015 | CW |
| Ethylbenzene | 3000* | ppbv | 16 | 100-41-4 | 13000* | 10/16/2015 | CW |
| 4-Ethyltoluene | 370 | ppbv | 16 | 622-96-8 | 1800 | 10/16/2015 | CW |
| Heptane | 2100* | ppbv | 16 | 142-82-5 | 8500* | 10/16/2015 | CW |
| Hexachlorobutadiene | <16 | ppbv | 16 | 87-68-3 | <170 | 10/16/2015 | CW |
| Hexane | 4500* | ppbv | 16 | 110-54-3 | 16000* | 10/16/2015 | CW |
| 2-Hexanone | <16 | ppbv | 16 | 591-78-6 | <66 | 10/16/2015 | CW |
| Isopropyl Alcohol | <16 | ppbv | 16 | 67-63-0 | <40 | 10/16/2015 | CW |
| Methyl ethyl ketone | <16 | ppbv | 16 | 78-93-3 | <48 | 10/16/2015 | CW |
| Methyl Isobutyl Ketone | <16 | ppbv | 16 | 108-10-1 | <66 | 10/16/2015 | CW |
| Methyl Tert Butyl Ether | <16 | ppbv | 16 | 1634-04-4 | <58 | 10/16/2015 | CW |
| Methylene chloride | 1400 | ppbv | 16 | 75-09-2 | 4900 | 10/16/2015 | CW |
| Methylmethacrylate | <16 | ppbv | 16 | 80-62-6 | <66 | 10/16/2015 | CW |
| m,p-Xylene | 5700* | ppbv | 16 | 108-38-3/106-42-3 | 25000* | 10/16/2015 | CW |
| Naphthalene | <16 | ppbv | 16 | 91-20-3 | <84 | 10/16/2015 | CW |
| o-Xylene | 1600* | ppbv | 16 | 95-47-6 | 6900* | 10/16/2015 | CW |
| Propylene | <40 | ppbv | 40 | 115-07-1 | <68 | 10/16/2015 | CW |
| Styrene | 61 | ppbv | 16 | 100-42-5 | 260 | 10/16/2015 | CW |
| Tertiary Butyl Alcohol | <16 | ppbv | 16 | 75-65-0 | <48 | 10/16/2015 | CW |
| 1,1,2,2-Tetrachloroethane | <16 | ppbv | 16 | 79-34-5 | <110 | 10/16/2015 | CW |
| Tetrachloroethylene | <3.2 | ppbv | 3.2 | 127-18-4 | <22 | 10/16/2015 | CW |
| Tetrahydrofuran | <16 | ppbv | 16 | 109-99-9 | <48 | 10/16/2015 | CW |
| Toluene | 3900* | ppbv | 16 | 108-88-3 | 15000* | 10/16/2015 | CW |
| trans-1,2-Dichloroethylene | <16 | ppbv | 16 | 156-60-5 | <64 | 10/16/2015 | CW |

**Brighton Analytical LLC**
2105 Pless Drive
Brighton, Michigan 48114
Phone: (810)229-7575 (810)229-8650
e-mail:bai-brighton@sbcglobal.net
MDNRE Certified #9404
NELAC Accredited #176507

Sample Date 10/6/2015
Submit Date 10/7/2015
Report Date: 10/20/2015

PM Environmental, Inc.
4080 W. 11 Mile Rd.
Berkley, MI 48072

BA Project # **36263**
BA Sample ID **CC00644**
Method **TO15**

Project Name: **Beacon & Bridge #8**
Project Number: **01-4982-0-003**
Sample ID: **SG-7S**

| Analyte Name | ppbv Result | Units | RL | CAS Number | ug/m3 Result | Date Analyzed | Analyst |
|---|---|---|---|---|---|---|---|
| **Volatile TO15 Analysis** | | | | | | | |
| trans-1,3-Dichloropropene | <16 | ppbv | 16 | 10061-02-6 | <72 | 10/16/2015 | CW |
| 1,2,4-Trichlorobenzene | <16 | ppbv | 16 | 120-82-1 | <118 | 10/16/2015 | CW |
| 1,1,1-Trichloroethane | <16 | ppbv | 16 | 71-55-6 | <88 | 10/16/2015 | CW |
| 1,1,2-Trichloroethane | <16 | ppbv | 16 | 79-00-5 | <88 | 10/16/2015 | CW |
| Trichloroethylene | <3.2 | ppbv | 3.2 | 79-01-6 | <17.2 | 10/16/2015 | CW |
| Trichlorofluoromethane | <16 | ppbv | 16 | 75-69-4 | <90 | 10/16/2015 | CW |
| 1,1,2-Trichlorotrifluoroethane(Freon113) | <16 | ppbv | 16 | 76-13-1 | <122 | 10/16/2015 | CW |
| 1,3,5-Trimethylbenzene | 43 | ppbv | 16 | 108-67-8 | 210 | 10/16/2015 | CW |
| 1,2,4-Trimethylbenzene | 68 | ppbv | 16 | 95-63-6 | 340 | 10/16/2015 | CW |
| 2,2,4-Trimethylpentane | 930 | ppbv | 16 | 540-84-1 | 4300 | 10/16/2015 | CW |
| Vinyl Acetate | <16 | ppbv | 16 | 108-05-4 | <56 | 10/16/2015 | CW |
| Vinyl chloride | <16 | ppbv | 16 | 75-01-4 | <40 | 10/16/2015 | CW |
| Xylenes(total) | 7300* | ppbv | 16 | 1330-20-7 | 31900* | 10/16/2015 | CW |

RL=Reported detection limit for analytical method requested. Some compounds require special analytical methods to achieve MDNR designated target detection limits (TDL).

Elevated volatile dl due to sample matrix.
*Over range of curve

Released by [signature]
Date 10/20/15

**Brighton Analytical LLC**
2105 Pless Drive
Brighton, Michigan 48114
Phone: (810)229-7575 (810)229-8650
e-mail:bai-brighton@sbcglobal.net
MDNRE Certified #9404
NELAC Accredited #176507

Sample Date 10/6/2015
Submit Date 10/7/2015
Report Date: 10/20/2015

PM Environmental, Inc.
4080 W. 11 Mile Rd.
Berkley, MI 48072

BA Project # **36263**
BA Sample ID **CC00645**
Method **TO15**

Project Name: **Beacon & Bridge #8**
Project Number: **01-4982-0-003**
Sample ID: **SG-7D**

| Analyte Name | ppbv Result | Units | RL | CAS Number | ug/m3 Result | Date Analyzed | Analyst |
|---|---|---|---|---|---|---|---|
| **Volatile TO15 Analysis** | | | | | | | |
| Acetone | <16 | ppbv | 16 | 67-64-1 | <38 | 10/16/2015 | CW |
| Benzene | 120000* | ppbv | 16 | 71-43-2 | 390000* | 10/16/2015 | CW |
| Benzyl Chloride | <16 | ppbv | 16 | 100-44-7 | <82 | 10/16/2015 | CW |
| Bromodichloromethane | <16 | ppbv | 16 | 75-27-4 | <108 | 10/16/2015 | CW |
| Bromoethene | <16 | ppbv | 16 | 593-60-2 | <70 | 10/16/2015 | CW |
| Bromoform | <16 | ppbv | 16 | 75-25-2 | <166 | 10/16/2015 | CW |
| Bromomethane | <16 | ppbv | 16 | 74-83-9 | <62 | 10/16/2015 | CW |
| 1,3-Butadiene | <16 | ppbv | 16 | 106-99-0 | <36 | 10/16/2015 | CW |
| Carbon disulfide | <16 | ppbv | 16 | 75-15-0 | <50 | 10/16/2015 | CW |
| Carbon tetrachloride | <16 | ppbv | 16 | 56-23-5 | <100 | 10/16/2015 | CW |
| Chlorobenzene | <16 | ppbv | 16 | 108-90-7 | <74 | 10/16/2015 | CW |
| Chloroethane | <16 | ppbv | 16 | 75-00-3 | <42 | 10/16/2015 | CW |
| Chloroform | <16 | ppbv | 16 | 67-66-3 | <78 | 10/16/2015 | CW |
| Chloromethane | <16 | ppbv | 16 | 74-87-3 | <34 | 10/16/2015 | CW |
| 3-Chloropropene | <16 | ppbv | 16 | 107-05-1 | <50 | 10/16/2015 | CW |
| 2-Chlorotoluene | <16 | ppbv | 16 | 95-49-8 | <82 | 10/16/2015 | CW |
| cis-1,2-Dichloroethylene | <16 | ppbv | 16 | 156-59-2 | <64 | 10/16/2015 | CW |
| cis-1,3-Dichloropropene | <16 | ppbv | 16 | 10061-01-5 | <72 | 10/16/2015 | CW |
| Cyclohexane | <16 | ppbv | 16 | 110-82-7 | <56 | 10/16/2015 | CW |
| Dibromochloromethane | <16 | ppbv | 16 | 124-48-1 | <136 | 10/16/2015 | CW |
| 1,2-Dibromoethane | <16 | ppbv | 16 | 106-93-4 | <122 | 10/16/2015 | CW |
| 1,4-Dichlorobenzene | <16 | ppbv | 16 | 106-46-7 | <96 | 10/16/2015 | CW |
| 1,2-Dichlorobenzene | <16 | ppbv | 16 | 95-50-1 | <96 | 10/16/2015 | CW |
| 1,3-Dichlorobenzene | <16 | ppbv | 16 | 541-73-1 | <96 | 10/16/2015 | CW |
| Dichlorodifluoromethane | <16 | ppbv | 16 | 75-71-8 | <80 | 10/16/2015 | CW |
| 1,2-Dichloroethane | <16 | ppbv | 16 | 107-06-2 | <64 | 10/16/2015 | CW |
| 1,1-Dichloroethane | <16 | ppbv | 16 | 75-34-3 | <64 | 10/16/2015 | CW |
| 1,1-Dichloroethylene | <16 | ppbv | 16 | 75-35-4 | <64 | 10/16/2015 | CW |

**Brighton Analytical LLC**
2105 Pless Drive
Brighton, Michigan 48114
Phone: (810)229-7575 (810)229-8650
e-mail:bai-brighton@sbcglobal.net
MDNRE Certified #9404
NELAC Accredited #176507

Sample Date 10/6/2015
Submit Date 10/7/2015
Report Date: 10/20/2015

PM Environmental, Inc.
4080 W. 11 Mile Rd.
Berkley, MI 48072

BA Project # **36263**
BA Sample ID **CC00645**
Method **TO15**

Project Name: **Beacon & Bridge #8**
Project Number: **01-4982-0-003**
Sample ID: **SG-7D**

| Analyte Name | ppbv Result | Units | RL | CAS Number | ug/m3 Result | Date Analyzed | Analyst |
|---|---|---|---|---|---|---|---|
| **Volatile TO15 Analysis** | | | | | | | |
| 1,2-Dichloropropane | <16 | ppbv | 16 | 78-87-5 | <74 | 10/16/2015 | CW |
| Dichlorotetrafluoroethane(Freon114) | <16 | ppbv | 16 | 76-14-2 | <112 | 10/16/2015 | CW |
| 1,4-Dioxane | <16 | ppbv | 16 | 123-91-1 | <58 | 10/16/2015 | CW |
| Ethanol | <40 | ppbv | 40 | 64-17-5 | <76 | 10/16/2015 | CW |
| Ethyl Acetate | <16 | ppbv | 16 | 141-78-6 | <58 | 10/16/2015 | CW |
| Ethylbenzene | 30000* | ppbv | 16 | 100-41-4 | 130000* | 10/16/2015 | CW |
| 4-Ethyltoluene | 300 | ppbv | 16 | 622-96-8 | 1500 | 10/16/2015 | CW |
| Heptane | 1600000* | ppbv | 16 | 142-82-5 | 6700000* | 10/16/2015 | CW |
| Hexachlorobutadiene | <16 | ppbv | 16 | 87-68-3 | <170 | 10/16/2015 | CW |
| Hexane | 770000* | ppbv | 16 | 110-54-3 | 2700000* | 10/16/2015 | CW |
| 2-Hexanone | <16 | ppbv | 16 | 591-78-6 | <66 | 10/16/2015 | CW |
| Isopropyl Alcohol | <16 | ppbv | 16 | 67-63-0 | <40 | 10/16/2015 | CW |
| Methyl ethyl ketone | <16 | ppbv | 16 | 78-93-3 | <48 | 10/16/2015 | CW |
| Methyl Isobutyl Ketone | <16 | ppbv | 16 | 108-10-1 | <66 | 10/16/2015 | CW |
| Methyl Tert Butyl Ether | <16 | ppbv | 16 | 1634-04-4 | <58 | 10/16/2015 | CW |
| Methylene chloride | <16 | ppbv | 16 | 75-09-2 | <56 | 10/16/2015 | CW |
| Methylmethacrylate | <16 | ppbv | 16 | 80-62-6 | <66 | 10/16/2015 | CW |
| m,p-Xylene | 43000* | ppbv | 16 | 108-38-3/106-42-3 | 190000* | 10/16/2015 | CW |
| Naphthalene | <16 | ppbv | 16 | 91-20-3 | <84 | 10/16/2015 | CW |
| o-Xylene | 8500* | ppbv | 16 | 95-47-6 | 37000* | 10/16/2015 | CW |
| Propylene | <40 | ppbv | 40 | 115-07-1 | <68 | 10/16/2015 | CW |
| Styrene | 270 | ppbv | 16 | 100-42-5 | 1200 | 10/16/2015 | CW |
| Tertiary Butyl Alcohol | <16 | ppbv | 16 | 75-65-0 | <48 | 10/16/2015 | CW |
| 1,1,2,2-Tetrachloroethane | <16 | ppbv | 16 | 79-34-5 | <110 | 10/16/2015 | CW |
| Tetrachloroethylene | <3.2 | ppbv | 3.2 | 127-18-4 | <22 | 10/16/2015 | CW |
| Tetrahydrofuran | <16 | ppbv | 16 | 109-99-9 | <48 | 10/16/2015 | CW |
| Toluene | 76000* | ppbv | 16 | 108-88-3 | 290000* | 10/16/2015 | CW |
| trans-1,2-Dichloroethylene | <16 | ppbv | 16 | 156-60-5 | <64 | 10/16/2015 | CW |

**Brighton Analytical LLC**
2105 Pless Drive
Brighton, Michigan 48114
Phone: (810)229-7575 (810)229-8650
e-mail:bai-brighton@sbcglobal.net
MDNRE Certified #9404
NELAC Accredited #176507

Sample Date 10/6/2015
Submit Date 10/7/2015
Report Date: 10/20/2015

PM Environmental, Inc.
4080 W. 11 Mile Rd.
Berkley, MI 48072

BA Project # **36263**
BA Sample ID **CC00645**
Method **TO15**

Project Name: **Beacon & Bridge #8**
Project Number: **01-4982-0-003**
Sample ID: **SG-7D**

| Analyte Name | ppbv Result | Units | RL | CAS Number | ug/m3 Result | Date Analyzed | Analyst |
|---|---|---|---|---|---|---|---|
| **Volatile TO15 Analysis** | | | | | | | |
| trans-1,3-Dichloropropene | <16 | ppbv | 16 | 10061-02-6 | <72 | 10/16/2015 | CW |
| 1,2,4-Trichlorobenzene | <16 | ppbv | 16 | 120-82-1 | <118 | 10/16/2015 | CW |
| 1,1,2-Trichloroethane | <16 | ppbv | 16 | 79-00-5 | <88 | 10/16/2015 | CW |
| 1,1,1-Trichloroethane | <16 | ppbv | 16 | 71-55-6 | <88 | 10/16/2015 | CW |
| Trichloroethylene | <3.2 | ppbv | 3.2 | 79-01-6 | <17.2 | 10/16/2015 | CW |
| Trichlorofluoromethane | <16 | ppbv | 16 | 75-69-4 | <90 | 10/16/2015 | CW |
| 1,1,2-Trichlorotrifluoroethane(Freon113) | <16 | ppbv | 16 | 76-13-1 | <122 | 10/16/2015 | CW |
| 1,2,4-Trimethylbenzene | 49 | ppbv | 16 | 95-63-6 | 240 | 10/16/2015 | CW |
| 1,3,5-Trimethylbenzene | 34 | ppbv | 16 | 108-67-8 | 170 | 10/16/2015 | CW |
| 2,2,4-Trimethylpentane | 250000* | ppbv | 16 | 540-84-1 | 1200000* | 10/16/2015 | CW |
| Vinyl Acetate | <16 | ppbv | 16 | 108-05-4 | <56 | 10/16/2015 | CW |
| Vinyl chloride | <16 | ppbv | 16 | 75-01-4 | <40 | 10/16/2015 | CW |
| Xylenes(total) | 51500* | ppbv | 16 | 1330-20-7 | 227000* | 10/16/2015 | CW |

RL=Reported detection limit for analytical method requested. Some compounds require special analytical methods to achieve MDNR designated target detection limits (TDL).

Elevated volatile dl due to sample matrix.
*Over range of curve

Released by

Date 10/20/15

**Brighton Analytical LLC**
2105 Pless Drive
Brighton, Michigan 48114
Phone: (810)229-7575 (810)229-8650
e-mail:bai-brighton@sbcglobal.net
MDNRE Certified #9404
NELAC Accredited #176507

Sample Date 10/6/2015
Submit Date 10/7/2015
Report Date: 10/20/2015

PM Environmental, Inc.
4080 W. 11 Mile Rd.
Berkley, MI 48072

BA Project # **36263**
BA Sample ID **CC00646**
Method **TO15**

Project Name: **Beacon & Bridge #8**
Project Number: **01-4982-0-003**
Sample ID: **SG-8**

| Analyte Name | ppbv Result | Units | RL | CAS Number | ug/m3 Result | Date Analyzed | Analyst |
|---|---|---|---|---|---|---|---|
| **Volatile TO15 Analysis** | | | | | | | |
| Acetone | <16 | ppbv | 16 | 67-64-1 | <38 | 10/16/2015 | CW |
| Benzene | 2000 | ppbv | 16 | 71-43-2 | 6500 | 10/16/2015 | CW |
| Benzyl Chloride | <16 | ppbv | 16 | 100-44-7 | <82 | 10/16/2015 | CW |
| Bromodichloromethane | <16 | ppbv | 16 | 75-27-4 | <108 | 10/16/2015 | CW |
| Bromoethene | <16 | ppbv | 16 | 593-60-2 | <70 | 10/16/2015 | CW |
| Bromoform | <16 | ppbv | 16 | 75-25-2 | <166 | 10/16/2015 | CW |
| Bromomethane | <16 | ppbv | 16 | 74-83-9 | <62 | 10/16/2015 | CW |
| 1,3-Butadiene | <16 | ppbv | 16 | 106-99-0 | <36 | 10/16/2015 | CW |
| Carbon disulfide | <16 | ppbv | 16 | 75-15-0 | <50 | 10/16/2015 | CW |
| Carbon tetrachloride | <16 | ppbv | 16 | 56-23-5 | <100 | 10/16/2015 | CW |
| Chlorobenzene | 25 | ppbv | 16 | 108-90-7 | 120 | 10/16/2015 | CW |
| Chloroethane | <16 | ppbv | 16 | 75-00-3 | <42 | 10/16/2015 | CW |
| Chloroform | <16 | ppbv | 16 | 67-66-3 | <78 | 10/16/2015 | CW |
| Chloromethane | <16 | ppbv | 16 | 74-87-3 | <34 | 10/16/2015 | CW |
| 3-Chloropropene | <16 | ppbv | 16 | 107-05-1 | <50 | 10/16/2015 | CW |
| 2-Chlorotoluene | <16 | ppbv | 16 | 95-49-8 | <82 | 10/16/2015 | CW |
| cis-1,2-Dichloroethylene | <16 | ppbv | 16 | 156-59-2 | <64 | 10/16/2015 | CW |
| cis-1,3-Dichloropropene | <16 | ppbv | 16 | 10061-01-5 | <72 | 10/16/2015 | CW |
| Cyclohexane | <16 | ppbv | 16 | 110-82-7 | <56 | 10/16/2015 | CW |
| Dibromochloromethane | <16 | ppbv | 16 | 124-48-1 | <136 | 10/16/2015 | CW |
| 1,2-Dibromoethane | <16 | ppbv | 16 | 106-93-4 | <122 | 10/16/2015 | CW |
| 1,4-Dichlorobenzene | <16 | ppbv | 16 | 106-46-7 | <96 | 10/16/2015 | CW |
| 1,2-Dichlorobenzene | <16 | ppbv | 16 | 95-50-1 | <96 | 10/16/2015 | CW |
| 1,3-Dichlorobenzene | <16 | ppbv | 16 | 541-73-1 | <96 | 10/16/2015 | CW |
| Dichlorodifluoromethane | <16 | ppbv | 16 | 75-71-8 | <80 | 10/16/2015 | CW |
| 1,2-Dichloroethane | <16 | ppbv | 16 | 107-06-2 | <64 | 10/16/2015 | CW |
| 1,1-Dichloroethane | <16 | ppbv | 16 | 75-34-3 | <64 | 10/16/2015 | CW |
| 1,1-Dichloroethylene | <16 | ppbv | 16 | 75-35-4 | <64 | 10/16/2015 | CW |

**Brighton Analytical LLC**
2105 Pless Drive
Brighton, Michigan 48114
Phone: (810)229-7575 (810)229-8650
e-mail:bai-brighton@sbcglobal.net
MDNRE Certified #9404
NELAC Accredited #176507

Sample Date 10/6/2015
Submit Date 10/7/2015
Report Date: 10/20/2015

PM Environmental, Inc.
4080 W. 11 Mile Rd.
Berkley, MI 48072

BA Project # **36263**
BA Sample ID **CC00646**
Method **TO15**

Project Name: **Beacon & Bridge #8**
Project Number: **01-4982-0-003**
Sample ID: **SG-8**

| Analyte Name | ppbv Result | Units | RL | CAS Number | ug/m3 Result | Date Analyzed | Analyst |
|---|---|---|---|---|---|---|---|
| **Volatile TO15 Analysis** | | | | | | | |
| 1,2-Dichloropropane | <16 | ppbv | 16 | 78-87-5 | <74 | 10/16/2015 | CW |
| Dichlorotetrafluoroethane(Freon114) | <16 | ppbv | 16 | 76-14-2 | <112 | 10/16/2015 | CW |
| 1,4-Dioxane | <16 | ppbv | 16 | 123-91-1 | <58 | 10/16/2015 | CW |
| Ethanol | <40 | ppbv | 40 | 64-17-5 | <76 | 10/16/2015 | CW |
| Ethyl Acetate | <16 | ppbv | 16 | 141-78-6 | <58 | 10/16/2015 | CW |
| Ethylbenzene | 290 | ppbv | 16 | 100-41-4 | 1300 | 10/16/2015 | CW |
| 4-Ethyltoluene | 220 | ppbv | 16 | 622-96-8 | 1100 | 10/16/2015 | CW |
| Heptane | 16000* | ppbv | 16 | 142-82-5 | 64000* | 10/16/2015 | CW |
| Hexachlorobutadiene | <16 | ppbv | 16 | 87-68-3 | <170 | 10/16/2015 | CW |
| Hexane | 67000* | ppbv | 16 | 110-54-3 | 240000* | 10/16/2015 | CW |
| 2-Hexanone | <16 | ppbv | 16 | 591-78-6 | <66 | 10/16/2015 | CW |
| Isopropyl Alcohol | <16 | ppbv | 16 | 67-63-0 | <40 | 10/16/2015 | CW |
| Methyl ethyl ketone | <16 | ppbv | 16 | 78-93-3 | <48 | 10/16/2015 | CW |
| Methyl Isobutyl Ketone | <16 | ppbv | 16 | 108-10-1 | <66 | 10/16/2015 | CW |
| Methyl Tert Butyl Ether | <16 | ppbv | 16 | 1634-04-4 | <58 | 10/16/2015 | CW |
| Methylene chloride | <16 | ppbv | 16 | 75-09-2 | <56 | 10/16/2015 | CW |
| Methylmethacrylate | <16 | ppbv | 16 | 80-62-6 | <66 | 10/16/2015 | CW |
| m,p-Xylene | 480 | ppbv | 16 | 108-38-3/106-42-3 | 2100 | 10/16/2015 | CW |
| Naphthalene | <16 | ppbv | 16 | 91-20-3 | <84 | 10/16/2015 | CW |
| o-Xylene | 110 | ppbv | 16 | 95-47-6 | 480 | 10/16/2015 | CW |
| Propylene | <40 | ppbv | 40 | 115-07-1 | <68 | 10/16/2015 | CW |
| Styrene | 35 | ppbv | 16 | 100-42-5 | 150 | 10/16/2015 | CW |
| Tertiary Butyl Alcohol | <16 | ppbv | 16 | 75-65-0 | <48 | 10/16/2015 | CW |
| 1,1,2,2-Tetrachloroethane | <16 | ppbv | 16 | 79-34-5 | <110 | 10/16/2015 | CW |
| Tetrachloroethylene | <3.2 | ppbv | 3.2 | 127-18-4 | <22 | 10/16/2015 | CW |
| Tetrahydrofuran | <16 | ppbv | 16 | 109-99-9 | <48 | 10/16/2015 | CW |
| Toluene | 2000 | ppbv | 16 | 108-88-3 | 7600 | 10/16/2015 | CW |
| trans-1,2-Dichloroethylene | <16 | ppbv | 16 | 156-60-5 | <64 | 10/16/2015 | CW |

**Brighton Analytical LLC**
2105 Pless Drive
Brighton, Michigan 48114
Phone: (810)229-7575 (810)229-8650
e-mail:bai-brighton@sbcglobal.net
MDNRE Certified #9404
NELAC Accredited #176507

Sample Date 10/6/2015
Submit Date 10/7/2015
Report Date: 10/20/2015

PM Environmental, Inc.
4080 W. 11 Mile Rd.
Berkley, MI 48072

BA Project # **36263**
BA Sample ID **CC00646**
Method **TO15**

Project Name: **Beacon & Bridge #8**
Project Number: **01-4982-0-003**
Sample ID: **SG-8**

| Analyte Name | ppbv Result | Units | RL | CAS Number | ug/m3 Result | Date Analyzed | Analyst |
|---|---|---|---|---|---|---|---|
| **Volatile TO15 Analysis** | | | | | | | |
| trans-1,3-Dichloropropene | <16 | ppbv | 16 | 10061-02-6 | <72 | 10/16/2015 | CW |
| 1,2,4-Trichlorobenzene | <16 | ppbv | 16 | 120-82-1 | <118 | 10/16/2015 | CW |
| 1,1,2-Trichloroethane | <16 | ppbv | 16 | 79-00-5 | <88 | 10/16/2015 | CW |
| 1,1,1-Trichloroethane | <16 | ppbv | 16 | 71-55-6 | <88 | 10/16/2015 | CW |
| Trichloroethylene | <3.2 | ppbv | 3.2 | 79-01-6 | <17.2 | 10/16/2015 | CW |
| Trichlorofluoromethane | <16 | ppbv | 16 | 75-69-4 | <90 | 10/16/2015 | CW |
| 1,1,2-Trichlorotrifluoroethane(Freon113) | <16 | ppbv | 16 | 76-13-1 | <122 | 10/16/2015 | CW |
| 1,3,5-Trimethylbenzene | 33 | ppbv | 16 | 108-67-8 | 160 | 10/16/2015 | CW |
| 1,2,4-Trimethylbenzene | 34 | ppbv | 16 | 95-63-6 | 170 | 10/16/2015 | CW |
| 2,2,4-Trimethylpentane | 18000* | ppbv | 16 | 540-84-1 | 85000* | 10/16/2015 | CW |
| Vinyl Acetate | <16 | ppbv | 16 | 108-05-4 | <56 | 10/16/2015 | CW |
| Vinyl chloride | <16 | ppbv | 16 | 75-01-4 | <40 | 10/16/2015 | CW |
| Xylenes(total) | 590 | ppbv | 16 | 1330-20-7 | 2580 | 10/16/2015 | CW |

RL=Reported detection limit for analytical method requested. Some compounds require special analytical methods to achieve MDNR designated target detection limits (TDL).

Elevated volatile dl due to sample matrix.
*Over range of curve

Released by William Topolski
Date 10/20/15

**Brighton Analytical LLC**
2105 Pless Drive
Brighton, Michigan 48114
Phone: (810)229-7575 (810)229-8650
e-mail:bai-brighton@sbcglobal.net
MDNRE Certified #9404
NELAC Accredited #176507

Sample Date 10/6/2015
Submit Date 10/7/2015
Report Date: 10/20/2015

PM Environmental, Inc.
4080 W. 11 Mile Rd.
Berkley, MI 48072

BA Project # **36263**
BA Sample ID **CC00647**
Method **TO15**

Project Name: **Beacon & Bridge #8**
Project Number: **01-4982-0-003**
Sample ID: **SG-9**

| Analyte Name | ppbv Result | Units | RL | CAS Number | ug/m3 Result | Date Analyzed | Analyst |
|---|---|---|---|---|---|---|---|
| **Volatile TO15 Analysis** | | | | | | | |
| Acetone | <16 | ppbv | 16 | 67-64-1 | <38 | 10/16/2015 | CW |
| Benzene | 220000* | ppbv | 16 | 71-43-2 | 700000* | 10/16/2015 | CW |
| Benzyl Chloride | <16 | ppbv | 16 | 100-44-7 | <82 | 10/16/2015 | CW |
| Bromodichloromethane | <16 | ppbv | 16 | 75-27-4 | <108 | 10/16/2015 | CW |
| Bromoethene | <16 | ppbv | 16 | 593-60-2 | <70 | 10/16/2015 | CW |
| Bromoform | <16 | ppbv | 16 | 75-25-2 | <166 | 10/16/2015 | CW |
| Bromomethane | <16 | ppbv | 16 | 74-83-9 | <62 | 10/16/2015 | CW |
| 1,3-Butadiene | <16 | ppbv | 16 | 106-99-0 | <36 | 10/16/2015 | CW |
| Carbon disulfide | <16 | ppbv | 16 | 75-15-0 | <50 | 10/16/2015 | CW |
| Carbon tetrachloride | <16 | ppbv | 16 | 56-23-5 | <100 | 10/16/2015 | CW |
| Chlorobenzene | <16 | ppbv | 16 | 108-90-7 | <74 | 10/16/2015 | CW |
| Chloroethane | <16 | ppbv | 16 | 75-00-3 | <42 | 10/16/2015 | CW |
| Chloroform | <16 | ppbv | 16 | 67-66-3 | <78 | 10/16/2015 | CW |
| Chloromethane | <16 | ppbv | 16 | 74-87-3 | <34 | 10/16/2015 | CW |
| 3-Chloropropene | <16 | ppbv | 16 | 107-05-1 | <50 | 10/16/2015 | CW |
| 2-Chlorotoluene | <16 | ppbv | 16 | 95-49-8 | <82 | 10/16/2015 | CW |
| cis-1,2-Dichloroethylene | <16 | ppbv | 16 | 156-59-2 | <64 | 10/16/2015 | CW |
| cis-1,3-Dichloropropene | <16 | ppbv | 16 | 10061-01-5 | <72 | 10/16/2015 | CW |
| Cyclohexane | <16 | ppbv | 16 | 110-82-7 | <56 | 10/16/2015 | CW |
| Dibromochloromethane | <16 | ppbv | 16 | 124-48-1 | <136 | 10/16/2015 | CW |
| 1,2-Dibromoethane | <16 | ppbv | 16 | 106-93-4 | <122 | 10/16/2015 | CW |
| 1,4-Dichlorobenzene | <16 | ppbv | 16 | 106-46-7 | <96 | 10/16/2015 | CW |
| 1,2-Dichlorobenzene | <16 | ppbv | 16 | 95-50-1 | <96 | 10/16/2015 | CW |
| 1,3-Dichlorobenzene | <16 | ppbv | 16 | 541-73-1 | <96 | 10/16/2015 | CW |
| Dichlorodifluoromethane | <16 | ppbv | 16 | 75-71-8 | <80 | 10/16/2015 | CW |
| 1,2-Dichloroethane | <16 | ppbv | 16 | 107-06-2 | <64 | 10/16/2015 | CW |
| 1,1-Dichloroethane | <16 | ppbv | 16 | 75-34-3 | <64 | 10/16/2015 | CW |
| 1,1-Dichloroethylene | <16 | ppbv | 16 | 75-35-4 | <64 | 10/16/2015 | CW |

**Brighton Analytical LLC**
2105 Pless Drive
Brighton, Michigan 48114
Phone: (810)229-7575 (810)229-8650
e-mail:bai-brighton@sbcglobal.net
MDNRE Certified #9404
NELAC Accredited #176507

Sample Date 10/6/2015
Submit Date 10/7/2015
Report Date: 10/20/2015

PM Environmental, Inc.
4080 W. 11 Mile Rd.
Berkley, MI 48072

BA Project # **36263**
BA Sample ID **CC00647**
Method **TO15**

Project Name: **Beacon & Bridge #8**
Project Number: **01-4982-0-003**
Sample ID: **SG-9**

| Analyte Name | ppbv Result | Units | RL | CAS Number | ug/m3 Result | Date Analyzed | Analyst |
|---|---|---|---|---|---|---|---|
| **Volatile TO15 Analysis** | | | | | | | |
| 1,2-Dichloropropane | <16 | ppbv | 16 | 78-87-5 | <74 | 10/16/2015 | CW |
| Dichlorotetrafluoroethane(Freon114) | <16 | ppbv | 16 | 76-14-2 | <112 | 10/16/2015 | CW |
| 1,4-Dioxane | <16 | ppbv | 16 | 123-91-1 | <58 | 10/16/2015 | CW |
| Ethanol | <40 | ppbv | 40 | 64-17-5 | <76 | 10/16/2015 | CW |
| Ethyl Acetate | <16 | ppbv | 16 | 141-78-6 | <58 | 10/16/2015 | CW |
| Ethylbenzene | 61000* | ppbv | 16 | 100-41-4 | 270000* | 10/16/2015 | CW |
| 4-Ethyltoluene | 5800* | ppbv | 16 | 622-96-8 | 29000* | 10/16/2015 | CW |
| Heptane | 1400000* | ppbv | 16 | 142-82-5 | 5800000* | 10/16/2015 | CW |
| Hexachlorobutadiene | <16 | ppbv | 16 | 87-68-3 | <170 | 10/16/2015 | CW |
| Hexane | 730000* | ppbv | 16 | 110-54-3 | 2600000* | 10/16/2015 | CW |
| 2-Hexanone | <16 | ppbv | 16 | 591-78-6 | <66 | 10/16/2015 | CW |
| Isopropyl Alcohol | <16 | ppbv | 16 | 67-63-0 | <40 | 10/16/2015 | CW |
| Methyl ethyl ketone | <16 | ppbv | 16 | 78-93-3 | <48 | 10/16/2015 | CW |
| Methyl Isobutyl Ketone | <16 | ppbv | 16 | 108-10-1 | <66 | 10/16/2015 | CW |
| Methyl Tert Butyl Ether | <16 | ppbv | 16 | 1634-04-4 | <58 | 10/16/2015 | CW |
| Methylene chloride | <16 | ppbv | 16 | 75-09-2 | <56 | 10/16/2015 | CW |
| Methylmethacrylate | <16 | ppbv | 16 | 80-62-6 | <66 | 10/16/2015 | CW |
| m,p-Xylene | 85000* | ppbv | 16 | 108-38-3/106-42-3 | 370000* | 10/16/2015 | CW |
| Naphthalene | <16 | ppbv | 16 | 91-20-3 | <84 | 10/16/2015 | CW |
| o-Xylene | 38000* | ppbv | 16 | 95-47-6 | 160000* | 10/16/2015 | CW |
| Propylene | <40 | ppbv | 40 | 115-07-1 | <68 | 10/16/2015 | CW |
| Styrene | 1400 | ppbv | 16 | 100-42-5 | 5800 | 10/16/2015 | CW |
| Tertiary Butyl Alcohol | <16 | ppbv | 16 | 75-65-0 | <48 | 10/16/2015 | CW |
| 1,1,2,2-Tetrachloroethane | <16 | ppbv | 16 | 79-34-5 | <110 | 10/16/2015 | CW |
| Tetrachloroethylene | <3.2 | ppbv | 3.2 | 127-18-4 | <22 | 10/16/2015 | CW |
| Tetrahydrofuran | <16 | ppbv | 16 | 109-99-9 | <48 | 10/16/2015 | CW |
| Toluene | 100000* | ppbv | 16 | 108-88-3 | 390000* | 10/16/2015 | CW |
| trans-1,2-Dichloroethylene | <16 | ppbv | 16 | 156-60-5 | <64 | 10/16/2015 | CW |

**Brighton Analytical LLC**
2105 Pless Drive
Brighton, Michigan 48114
Phone: (810)229-7575 (810)229-8650
e-mail:bai-brighton@sbcglobal.net
MDNRE Certified #9404
NELAC Accredited #176507

Sample Date 10/6/2015
Submit Date 10/7/2015
Report Date: 10/20/2015

PM Environmental, Inc.
4080 W. 11 Mile Rd.
Berkley, MI 48072

BA Project # **36263**
BA Sample ID **CC00647**
Method **TO15**

Project Name: **Beacon & Bridge #8**
Project Number: **01-4982-0-003**
Sample ID: **SG-9**

| Analyte Name | ppbv Result | Units | RL | CAS Number | ug/m3 Result | Date Analyzed | Analyst |
|---|---|---|---|---|---|---|---|
| **Volatile TO15 Analysis** | | | | | | | |
| trans-1,3-Dichloropropene | <16 | ppbv | 16 | 10061-02-6 | <72 | 10/16/2015 | CW |
| 1,2,4-Trichlorobenzene | <16 | ppbv | 16 | 120-82-1 | <118 | 10/16/2015 | CW |
| 1,1,2-Trichloroethane | <16 | ppbv | 16 | 79-00-5 | <88 | 10/16/2015 | CW |
| 1,1,1-Trichloroethane | <16 | ppbv | 16 | 71-55-6 | <88 | 10/16/2015 | CW |
| Trichloroethylene | <3.2 | ppbv | 3.2 | 79-01-6 | <17.2 | 10/16/2015 | CW |
| Trichlorofluoromethane | <16 | ppbv | 16 | 75-69-4 | <90 | 10/16/2015 | CW |
| 1,1,2-Trichlorotrifluoroethane(Freon113) | <16 | ppbv | 16 | 76-13-1 | <122 | 10/16/2015 | CW |
| 1,3,5-Trimethylbenzene | 530 | ppbv | 16 | 108-67-8 | 2600 | 10/16/2015 | CW |
| 1,2,4-Trimethylbenzene | 680 | ppbv | 16 | 95-63-6 | 3300 | 10/16/2015 | CW |
| 2,2,4-Trimethylpentane | 260000* | ppbv | 16 | 540-84-1 | 1200000* | 10/16/2015 | CW |
| Vinyl Acetate | <16 | ppbv | 16 | 108-05-4 | <56 | 10/16/2015 | CW |
| Vinyl chloride | <16 | ppbv | 16 | 75-01-4 | <40 | 10/16/2015 | CW |
| Xylenes(total) | 123000* | ppbv | 16 | 1330-20-7 | 530000* | 10/16/2015 | CW |

RL=Reported detection limit for analytical method requested. Some compounds require special analytical methods to achieve MDNR designated target detection limits (TDL).

Elevated volatile dl due to sample matrix.
*Over range of curve

Released by [signature]
Date 10/20/15

**Brighton Analytical LLC**
2105 Pless Drive
Brighton, Michigan 48114
Phone: (810)229-7575 (810)229-8650
e-mail:bai-brighton@sbcglobal.net
MDNRE Certified #9404
NELAC Accredited #176507

Sample Date 10/6/2015
Submit Date 10/7/2015
Report Date: 10/20/2015

PM Environmental, Inc.
4080 W. 11 Mile Rd.
Berkley, MI 48072

BA Project # **36263**
BA Sample ID **CC00648**
Method **TO15**

Project Name: **Beacon & Bridge #8**
Project Number: **01-4982-0-003**
Sample ID: **SG-10**

| Analyte Name | ppbv Result | Units | RL | CAS Number | ug/m3 Result | Date Analyzed | Analyst |
|---|---|---|---|---|---|---|---|
| **Volatile TO15 Analysis** | | | | | | | |
| Acetone | <16 | ppbv | 16 | 67-64-1 | <38 | 10/16/2015 | CW |
| Benzene | 9000* | ppbv | 16 | 71-43-2 | 29000* | 10/16/2015 | CW |
| Benzyl Chloride | <16 | ppbv | 16 | 100-44-7 | <82 | 10/16/2015 | CW |
| Bromodichloromethane | <16 | ppbv | 16 | 75-27-4 | <108 | 10/16/2015 | CW |
| Bromoethene | <16 | ppbv | 16 | 593-60-2 | <70 | 10/16/2015 | CW |
| Bromoform | <16 | ppbv | 16 | 75-25-2 | <166 | 10/16/2015 | CW |
| Bromomethane | <16 | ppbv | 16 | 74-83-9 | <62 | 10/16/2015 | CW |
| 1,3-Butadiene | <16 | ppbv | 16 | 106-99-0 | <36 | 10/16/2015 | CW |
| Carbon disulfide | <16 | ppbv | 16 | 75-15-0 | <50 | 10/16/2015 | CW |
| Carbon tetrachloride | <16 | ppbv | 16 | 56-23-5 | <100 | 10/16/2015 | CW |
| Chlorobenzene | <16 | ppbv | 16 | 108-90-7 | <74 | 10/16/2015 | CW |
| Chloroethane | <16 | ppbv | 16 | 75-00-3 | <42 | 10/16/2015 | CW |
| Chloroform | <16 | ppbv | 16 | 67-66-3 | <78 | 10/16/2015 | CW |
| Chloromethane | <16 | ppbv | 16 | 74-87-3 | <34 | 10/16/2015 | CW |
| 3-Chloropropene | <16 | ppbv | 16 | 107-05-1 | <50 | 10/16/2015 | CW |
| 2-Chlorotoluene | <16 | ppbv | 16 | 95-49-8 | <82 | 10/16/2015 | CW |
| cis-1,2-Dichloroethylene | <16 | ppbv | 16 | 156-59-2 | <64 | 10/16/2015 | CW |
| cis-1,3-Dichloropropene | <16 | ppbv | 16 | 10061-01-5 | <72 | 10/16/2015 | CW |
| Cyclohexane | <16 | ppbv | 16 | 110-82-7 | <56 | 10/16/2015 | CW |
| Dibromochloromethane | <16 | ppbv | 16 | 124-48-1 | <136 | 10/16/2015 | CW |
| 1,2-Dibromoethane | <16 | ppbv | 16 | 106-93-4 | <122 | 10/16/2015 | CW |
| 1,4-Dichlorobenzene | <16 | ppbv | 16 | 106-46-7 | <96 | 10/16/2015 | CW |
| 1,2-Dichlorobenzene | <16 | ppbv | 16 | 95-50-1 | <96 | 10/16/2015 | CW |
| 1,3-Dichlorobenzene | <16 | ppbv | 16 | 541-73-1 | <96 | 10/16/2015 | CW |
| Dichlorodifluoromethane | <16 | ppbv | 16 | 75-71-8 | <80 | 10/16/2015 | CW |
| 1,1-Dichloroethane | <16 | ppbv | 16 | 75-34-3 | <64 | 10/16/2015 | CW |
| 1,2-Dichloroethane | <16 | ppbv | 16 | 107-06-2 | <64 | 10/16/2015 | CW |
| 1,1-Dichloroethylene | <16 | ppbv | 16 | 75-35-4 | <64 | 10/16/2015 | CW |

**Brighton Analytical LLC**
2105 Pless Drive
Brighton, Michigan 48114
Phone: (810)229-7575 (810)229-8650
e-mail:bai-brighton@sbcglobal.net
MDNRE Certified #9404
NELAC Accredited #176507

Sample Date 10/6/2015
Submit Date 10/7/2015
Report Date: 10/20/2015

PM Environmental, Inc.
4080 W. 11 Mile Rd.
Berkley, MI 48072

BA Project # **36263**
BA Sample ID **CC00648**
Method **TO15**

Project Name: **Beacon & Bridge #8**
Project Number: **01-4982-0-003**
Sample ID: **SG-10**

| Analyte Name | ppbv Result | Units | RL | CAS Number | ug/m3 Result | Date Analyzed | Analyst |
|---|---|---|---|---|---|---|---|
| **Volatile TO15 Analysis** | | | | | | | |
| 1,2-Dichloropropane | <16 | ppbv | 16 | 78-87-5 | <74 | 10/16/2015 | CW |
| Dichlorotetrafluoroethane(Freon114) | <16 | ppbv | 16 | 76-14-2 | <112 | 10/16/2015 | CW |
| 1,4-Dioxane | <16 | ppbv | 16 | 123-91-1 | <58 | 10/16/2015 | CW |
| Ethanol | <40 | ppbv | 40 | 64-17-5 | <76 | 10/16/2015 | CW |
| Ethyl Acetate | <16 | ppbv | 16 | 141-78-6 | <58 | 10/16/2015 | CW |
| Ethylbenzene | 2700* | ppbv | 16 | 100-41-4 | 12000* | 10/16/2015 | CW |
| 4-Ethyltoluene | 200 | ppbv | 16 | 622-96-8 | 1000 | 10/16/2015 | CW |
| Heptane | 15000* | ppbv | 16 | 142-82-5 | 61000* | 10/16/2015 | CW |
| Hexachlorobutadiene | <16 | ppbv | 16 | 87-68-3 | <170 | 10/16/2015 | CW |
| Hexane | 34000* | ppbv | 16 | 110-54-3 | 120000* | 10/16/2015 | CW |
| 2-Hexanone | <16 | ppbv | 16 | 591-78-6 | <66 | 10/16/2015 | CW |
| Isopropyl Alcohol | <16 | ppbv | 16 | 67-63-0 | <40 | 10/16/2015 | CW |
| Methyl ethyl ketone | <16 | ppbv | 16 | 78-93-3 | <48 | 10/16/2015 | CW |
| Methyl Isobutyl Ketone | <16 | ppbv | 16 | 108-10-1 | <66 | 10/16/2015 | CW |
| Methyl Tert Butyl Ether | <16 | ppbv | 16 | 1634-04-4 | <58 | 10/16/2015 | CW |
| Methylene chloride | <16 | ppbv | 16 | 75-09-2 | <56 | 10/16/2015 | CW |
| Methylmethacrylate | <16 | ppbv | 16 | 80-62-6 | <66 | 10/16/2015 | CW |
| m,p-Xylene | 4400* | ppbv | 16 | 108-38-3/106-42-3 | 19000* | 10/16/2015 | CW |
| Naphthalene | <16 | ppbv | 16 | 91-20-3 | <84 | 10/16/2015 | CW |
| o-Xylene | 1100 | ppbv | 16 | 95-47-6 | 4600 | 10/16/2015 | CW |
| Propylene | <40 | ppbv | 40 | 115-07-1 | <68 | 10/16/2015 | CW |
| Styrene | 43 | ppbv | 16 | 100-42-5 | 180 | 10/16/2015 | CW |
| Tertiary Butyl Alcohol | <16 | ppbv | 16 | 75-65-0 | <48 | 10/16/2015 | CW |
| 1,1,2,2-Tetrachloroethane | <16 | ppbv | 16 | 79-34-5 | <110 | 10/16/2015 | CW |
| Tetrachloroethylene | <3.2 | ppbv | 3.2 | 127-18-4 | <22 | 10/16/2015 | CW |
| Tetrahydrofuran | <16 | ppbv | 16 | 109-99-9 | <48 | 10/16/2015 | CW |
| Toluene | 7800* | ppbv | 16 | 108-88-3 | 29000* | 10/16/2015 | CW |
| trans-1,2-Dichloroethylene | <16 | ppbv | 16 | 156-60-5 | <64 | 10/16/2015 | CW |

**Brighton Analytical LLC**
2105 Pless Drive
Brighton, Michigan 48114
Phone: (810)229-7575 (810)229-8650
e-mail:bai-brighton@sbcglohal.net
MDNRE Certified #9404
NELAC Accredited #176507

Sample Date 10/6/2015
Submit Date 10/7/2015
Report Date: 10/20/2015

PM Environmental, Inc.
4080 W. 11 Mile Rd.
Berkley, MI 48072

BA Project # **36263**
BA Sample ID **CC00648**
Method **TO15**

Project Name: **Beacon & Bridge #8**
Project Number: **01-4982-0-003**
Sample ID: **SG-10**

| Analyte Name | ppbv Result | Units | RL | CAS Number | ug/m3 Result | Date Analyzed | Analyst |
|---|---|---|---|---|---|---|---|
| **Volatile TO15 Analysis** | | | | | | | |
| trans-1,3-Dichloropropene | <16 | ppbv | 16 | 10061-02-6 | <72 | 10/16/2015 | CW |
| 1,2,4-Trichlorobenzene | <16 | ppbv | 16 | 120-82-1 | <118 | 10/16/2015 | CW |
| 1,1,1-Trichloroethane | <16 | ppbv | 16 | 71-55-6 | <88 | 10/16/2015 | CW |
| 1,1,2-Trichloroethane | <16 | ppbv | 16 | 79-00-5 | <88 | 10/16/2015 | CW |
| Trichloroethylene | <3.2 | ppbv | 3.2 | 79-01-6 | <17.2 | 10/16/2015 | CW |
| Trichlorofluoromethane | <16 | ppbv | 16 | 75-69-4 | <90 | 10/16/2015 | CW |
| 1,1,2-Trichlorotrifluoroethane(Freon113) | <16 | ppbv | 16 | 76-13-1 | <122 | 10/16/2015 | CW |
| 1,3,5-Trimethylbenzene | 23 | ppbv | 16 | 108-67-8 | 110 | 10/16/2015 | CW |
| 1,2,4-Trimethylbenzene | 34 | ppbv | 16 | 95-63-6 | 170 | 10/16/2015 | CW |
| 2,2,4-Trimethylpentane | 16000* | ppbv | 16 | 540-84-1 | 77000* | 10/16/2015 | CW |
| Vinyl Acetate | <16 | ppbv | 16 | 108-05-4 | <56 | 10/16/2015 | CW |
| Vinyl chloride | <16 | ppbv | 16 | 75-01-4 | <40 | 10/16/2015 | CW |
| Xylenes(total) | 5500* | ppbv | 16 | 1330-20-7 | 23600* | 10/16/2015 | CW |

RL=Reported detection limit for analytical method requested. Some compounds require special analytical methods to achieve MDNR designated target detection limits (TDL).

Elevated volatile dl due to sample matrix.
*Over range of curve

Released by [signature]
Date 10/20/15

**Brighton Analytical LLC**
2105 Pless Drive
Brighton, Michigan 48114
Phone: (810)229-7575 (810)229-8650
e-mail:bai-brighton@sbcglobal.net
MDNRE Certified #9404
NELAC Accredited #176507

Sample Date 10/6/2015
Submit Date 10/7/2015
Report Date: 10/20/2015

PM Environmental, Inc.
4080 W. 11 Mile Rd.
Berkley, MI 48072

BA Project # **36263**
BA Sample ID **CC00649**
Method **TO15**

Project Name: **Beacon & Bridge #8**
Project Number: **01-4982-0-003**
Sample ID: **SG-11**

| Analyte Name | ppbv Result | Units | RL | CAS Number | ug/m3 Result | Date Analyzed | Analyst |
|---|---|---|---|---|---|---|---|
| **Volatile TO15 Analysis** | | | | | | | |
| Acetone | <16 | ppbv | 16 | 67-64-1 | <38 | 10/16/2015 | CW |
| Benzene | 230000* | ppbv | 16 | 71-43-2 | 730000* | 10/16/2015 | CW |
| Benzyl Chloride | <16 | ppbv | 16 | 100-44-7 | <82 | 10/16/2015 | CW |
| Bromodichloromethane | <16 | ppbv | 16 | 75-27-4 | <108 | 10/16/2015 | CW |
| Bromoethene | <16 | ppbv | 16 | 593-60-2 | <70 | 10/16/2015 | CW |
| Bromoform | <16 | ppbv | 16 | 75-25-2 | <166 | 10/16/2015 | CW |
| Bromomethane | <16 | ppbv | 16 | 74-83-9 | <62 | 10/16/2015 | CW |
| 1,3-Butadiene | <16 | ppbv | 16 | 106-99-0 | <36 | 10/16/2015 | CW |
| Carbon disulfide | <16 | ppbv | 16 | 75-15-0 | <50 | 10/16/2015 | CW |
| Carbon tetrachloride | <16 | ppbv | 16 | 56-23-5 | <100 | 10/16/2015 | CW |
| Chlorobenzene | <16 | ppbv | 16 | 108-90-7 | <74 | 10/16/2015 | CW |
| Chloroethane | <16 | ppbv | 16 | 75-00-3 | <42 | 10/16/2015 | CW |
| Chloroform | <16 | ppbv | 16 | 67-66-3 | <78 | 10/16/2015 | CW |
| Chloromethane | <16 | ppbv | 16 | 74-87-3 | <34 | 10/16/2015 | CW |
| 3-Chloropropene | <16 | ppbv | 16 | 107-05-1 | <50 | 10/16/2015 | CW |
| 2-Chlorotoluene | <16 | ppbv | 16 | 95-49-8 | <82 | 10/16/2015 | CW |
| cis-1,2-Dichloroethylene | <16 | ppbv | 16 | 156-59-2 | <64 | 10/16/2015 | CW |
| cis-1,3-Dichloropropene | <16 | ppbv | 16 | 10061-01-5 | <72 | 10/16/2015 | CW |
| Cyclohexane | <16 | ppbv | 16 | 110-82-7 | <56 | 10/16/2015 | CW |
| Dibromochloromethane | <16 | ppbv | 16 | 124-48-1 | <136 | 10/16/2015 | CW |
| 1,2-Dibromoethane | <16 | ppbv | 16 | 106-93-4 | <122 | 10/16/2015 | CW |
| 1,2-Dichlorobenzene | <16 | ppbv | 16 | 95-50-1 | <96 | 10/16/2015 | CW |
| 1,4-Dichlorobenzene | <16 | ppbv | 16 | 106-46-7 | <96 | 10/16/2015 | CW |
| 1,3-Dichlorobenzene | <16 | ppbv | 16 | 541-73-1 | <96 | 10/16/2015 | CW |
| Dichlorodifluoromethane | <16 | ppbv | 16 | 75-71-8 | <80 | 10/16/2015 | CW |
| 1,2-Dichloroethane | <16 | ppbv | 16 | 107-06-2 | <64 | 10/16/2015 | CW |
| 1,1-Dichloroethane | <16 | ppbv | 16 | 75-34-3 | <64 | 10/16/2015 | CW |
| 1,1-Dichloroethylene | <16 | ppbv | 16 | 75-35-4 | <64 | 10/16/2015 | CW |

**Brighton Analytical LLC**
2105 Pless Drive
Brighton, Michigan 48114
Phone: (810)229-7575 (810)229-8650
e-mail:bai-brighton@sbcglobal.net
MDNRE Certified #9404
NELAC Accredited #176507

Sample Date 10/6/2015
Submit Date 10/7/2015
Report Date: 10/20/2015

PM Environmental, Inc.
4080 W. 11 Mile Rd.
Berkley, MI 48072

BA Project # **36263**
BA Sample ID **CC00649**
Method **TO15**

Project Name: **Beacon & Bridge #8**
Project Number: **01-4982-0-003**
Sample ID: **SG-11**

| Analyte Name | ppbv Result | Units | RL | CAS Number | ug/m3 Result | Date Analyzed | Analyst |
|---|---|---|---|---|---|---|---|
| **Volatile TO15 Analysis** | | | | | | | |
| 1,2-Dichloropropane | <16 | ppbv | 16 | 78-87-5 | <74 | 10/16/2015 | CW |
| Dichlorotetrafluoroethane(Freon114) | <16 | ppbv | 16 | 76-14-2 | <112 | 10/16/2015 | CW |
| 1,4-Dioxane | <16 | ppbv | 16 | 123-91-1 | <58 | 10/16/2015 | CW |
| Ethanol | <40 | ppbv | 40 | 64-17-5 | <76 | 10/16/2015 | CW |
| Ethyl Acetate | <16 | ppbv | 16 | 141-78-6 | <58 | 10/16/2015 | CW |
| Ethylbenzene | 51000* | ppbv | 16 | 100-41-4 | 220000* | 10/16/2015 | CW |
| 4-Ethyltoluene | 1900 | ppbv | 16 | 622-96-8 | 9500 | 10/16/2015 | CW |
| Heptane | 1900000* | ppbv | 16 | 142-82-5 | 7900000* | 10/16/2015 | CW |
| Hexachlorobutadiene | <16 | ppbv | 16 | 87-68-3 | <170 | 10/16/2015 | CW |
| Hexane | 880000* | ppbv | 16 | 110-54-3 | 3100000* | 10/16/2015 | CW |
| 2-Hexanone | <16 | ppbv | 16 | 591-78-6 | <66 | 10/16/2015 | CW |
| Isopropyl Alcohol | <16 | ppbv | 16 | 67-63-0 | <40 | 10/16/2015 | CW |
| Methyl ethyl ketone | <16 | ppbv | 16 | 78-93-3 | <48 | 10/16/2015 | CW |
| Methyl Isobutyl Ketone | <16 | ppbv | 16 | 108-10-1 | <66 | 10/16/2015 | CW |
| Methyl Tert Butyl Ether | <16 | ppbv | 16 | 1634-04-4 | <58 | 10/16/2015 | CW |
| Methylene chloride | <16 | ppbv | 16 | 75-09-2 | <56 | 10/16/2015 | CW |
| Methylmethacrylate | <16 | ppbv | 16 | 80-62-6 | <66 | 10/16/2015 | CW |
| m,p-Xylene | 70000* | ppbv | 16 | 108-38-3/106-42-3 | 310000* | 10/16/2015 | CW |
| Naphthalene | <16 | ppbv | 16 | 91-20-3 | <84 | 10/16/2015 | CW |
| o-Xylene | 13000* | ppbv | 16 | 95-47-6 | 57000* | 10/16/2015 | CW |
| Propylene | <40 | ppbv | 40 | 115-07-1 | <68 | 10/16/2015 | CW |
| Styrene | 440 | ppbv | 16 | 100-42-5 | 1900 | 10/16/2015 | CW |
| Tertiary Butyl Alcohol | <16 | ppbv | 16 | 75-65-0 | <48 | 10/16/2015 | CW |
| 1,1,2,2-Tetrachloroethane | <16 | ppbv | 16 | 79-34-5 | <110 | 10/16/2015 | CW |
| Tetrachloroethylene | <3.2 | ppbv | 3.2 | 127-18-4 | <22 | 10/16/2015 | CW |
| Tetrahydrofuran | <16 | ppbv | 16 | 109-99-9 | <48 | 10/16/2015 | CW |
| Toluene | 110000* | ppbv | 16 | 108-88-3 | 420000* | 10/16/2015 | CW |
| trans-1,2-Dichloroethylene | <16 | ppbv | 16 | 156-60-5 | <64 | 10/16/2015 | CW |

**Brighton Analytical LLC**
2105 Pless Drive
Brighton, Michigan 48114
Phone: (810)229-7575 (810)229-8650
e-mail:bai-brighton@sbcglobal.net
MDNRE Certified #9404
NELAC Accredited #176507

Sample Date 10/6/2015
Submit Date 10/7/2015
Report Date: 10/20/2015

PM Environmental, Inc.
4080 W. 11 Mile Rd.
Berkley, MI 48072

BA Project # **36263**
BA Sample ID **CC00649**
Method **TO15**

Project Name: **Beacon & Bridge #8**
Project Number: **01-4982-0-003**
Sample ID: **SG-11**

| Analyte Name | ppbv Result | Units | RL | CAS Number | ug/m3 Result | Date Analyzed | Analyst |
|---|---|---|---|---|---|---|---|
| **Volatile TO15 Analysis** | | | | | | | |
| trans-1,3-Dichloropropene | <16 | ppbv | 16 | 10061-02-6 | <72 | 10/16/2015 | CW |
| 1,2,4-Trichlorobenzene | <16 | ppbv | 16 | 120-82-1 | <118 | 10/16/2015 | CW |
| 1,1,1-Trichloroethane | <16 | ppbv | 16 | 71-55-6 | <88 | 10/16/2015 | CW |
| 1,1,2-Trichloroethane | <16 | ppbv | 16 | 79-00-5 | <88 | 10/16/2015 | CW |
| Trichloroethylene | <3.2 | ppbv | 3.2 | 79-01-6 | <17.2 | 10/16/2015 | CW |
| Trichlorofluoromethane | <16 | ppbv | 16 | 75-69-4 | <90 | 10/16/2015 | CW |
| 1,1,2-Trichlorotrifluoroethane(Freon113) | <16 | ppbv | 16 | 76-13-1 | <122 | 10/16/2015 | CW |
| 1,3,5-Trimethylbenzene | 270 | ppbv | 16 | 108-67-8 | 1300 | 10/16/2015 | CW |
| 1,2,4-Trimethylbenzene | 270 | ppbv | 16 | 95-63-6 | 1300 | 10/16/2015 | CW |
| 2,2,4-Trimethylpentane | 270000* | ppbv | 16 | 540-84-1 | 1300000* | 10/16/2015 | CW |
| Vinyl Acetate | <16 | ppbv | 16 | 108-05-4 | <56 | 10/16/2015 | CW |
| Vinyl chloride | <16 | ppbv | 16 | 75-01-4 | <40 | 10/16/2015 | CW |
| Xylenes(total) | 83000* | ppbv | 16 | 1330-20-7 | 367000* | 10/16/2015 | CW |

RL=Reported detection limit for analytical method requested. Some compounds require special analytical methods to achieve MDNR designated target detection limits (TDL).

Elevated volatile dl due to sample matrix.
*Over range of curve

Released by [signature]
Date 10/20/15

**Brighton Analytical LLC**
2105 Pless Drive
Brighton, Michigan 48114
Phone: (810)229-7575 (810)229-8650
e-mail:bai-brighton@sbcglobal.net
MDNRE Certified #9404
NELAC Accredited #176507

Sample Date 10/6/2015
Submit Date 10/7/2015
Report Date: 10/20/2015

PM Environmental, Inc.
4080 W. 11 Mile Rd.
Berkley, MI 48072

BA Project # **36263**
BA Sample ID **CC00650**
Method **TO15**

Project Name: **Beacon & Bridge #8**
Project Number: **01-4982-0-003**
Sample ID: **SG-12**

| Analyte Name | ppbv Result | Units | RL | CAS Number | ug/m3 Result | Date Analyzed | Analyst |
|---|---|---|---|---|---|---|---|
| **Volatile TO15 Analysis** | | | | | | | |
| Acetone | <16 | ppbv | 16 | 67-64-1 | <38 | 10/16/2015 | CW |
| Benzene | 13000* | ppbv | 16 | 71-43-2 | 43000* | 10/16/2015 | CW |
| Benzyl Chloride | <16 | ppbv | 16 | 100-44-7 | <82 | 10/16/2015 | CW |
| Bromodichloromethane | <16 | ppbv | 16 | 75-27-4 | <108 | 10/16/2015 | CW |
| Bromoethene | <16 | ppbv | 16 | 593-60-2 | <70 | 10/16/2015 | CW |
| Bromoform | <16 | ppbv | 16 | 75-25-2 | <166 | 10/16/2015 | CW |
| Bromomethane | <16 | ppbv | 16 | 74-83-9 | <62 | 10/16/2015 | CW |
| 1,3-Butadiene | <16 | ppbv | 16 | 106-99-0 | <36 | 10/16/2015 | CW |
| Carbon disulfide | <16 | ppbv | 16 | 75-15-0 | <50 | 10/16/2015 | CW |
| Carbon tetrachloride | <16 | ppbv | 16 | 56-23-5 | <100 | 10/16/2015 | CW |
| Chlorobenzene | <16 | ppbv | 16 | 108-90-7 | <74 | 10/16/2015 | CW |
| Chloroethane | <16 | ppbv | 16 | 75-00-3 | <42 | 10/16/2015 | CW |
| Chloroform | <16 | ppbv | 16 | 67-66-3 | <78 | 10/16/2015 | CW |
| Chloromethane | <16 | ppbv | 16 | 74-87-3 | <34 | 10/16/2015 | CW |
| 3-Chloropropene | <16 | ppbv | 16 | 107-05-1 | <50 | 10/16/2015 | CW |
| 2-Chlorotoluene | <16 | ppbv | 16 | 95-49-8 | <82 | 10/16/2015 | CW |
| cis-1,2-Dichloroethylene | <16 | ppbv | 16 | 156-59-2 | <64 | 10/16/2015 | CW |
| cis-1,3-Dichloropropene | <16 | ppbv | 16 | 10061-01-5 | <72 | 10/16/2015 | CW |
| Cyclohexane | <16 | ppbv | 16 | 110-82-7 | <56 | 10/16/2015 | CW |
| Dibromochloromethane | <16 | ppbv | 16 | 124-48-1 | <136 | 10/16/2015 | CW |
| 1,2-Dibromoethane | <16 | ppbv | 16 | 106-93-4 | <122 | 10/16/2015 | CW |
| 1,4-Dichlorobenzene | <16 | ppbv | 16 | 106-46-7 | <96 | 10/16/2015 | CW |
| 1,2-Dichlorobenzene | <16 | ppbv | 16 | 95-50-1 | <96 | 10/16/2015 | CW |
| 1,3-Dichlorobenzene | <16 | ppbv | 16 | 541-73-1 | <96 | 10/16/2015 | CW |
| Dichlorodifluoromethane | <16 | ppbv | 16 | 75-71-8 | <80 | 10/16/2015 | CW |
| 1,1-Dichloroethane | <16 | ppbv | 16 | 75-34-3 | <64 | 10/16/2015 | CW |
| 1,2-Dichloroethane | <16 | pphv | 16 | 107-06-2 | <64 | 10/16/2015 | CW |
| 1,1-Dichloroethylene | <16 | ppbv | 16 | 75-35-4 | <64 | 10/16/2015 | CW |

**Brighton Analytical LLC**
2105 Pless Drive
Brighton, Michigan 48114
Phone: (810)229-7575 (810)229-8650
e-mail:bai-brighton@sbcglobal.net
MDNRE Certified #9404
NELAC Accredited #176507

Sample Date 10/6/2015
Submit Date 10/7/2015
Report Date: 10/20/2015

PM Environmental, Inc.
4080 W. 11 Mile Rd.
Berkley, MI 48072

BA Project # **36263**
BA Sample ID **CC00650**
Method **TO15**

Project Name: **Beacon & Bridge #8**
Project Number: **01-4982-0-003**
Sample ID: **SG-12**

| Analyte Name | ppbv Result | Units | RL | CAS Number | ug/m3 Result | Date Analyzed | Analyst |
|---|---|---|---|---|---|---|---|
| **Volatile TO15 Analysis** | | | | | | | |
| 1,2-Dichloropropane | <16 | ppbv | 16 | 78-87-5 | <74 | 10/16/2015 | CW |
| Dichlorotetrafluoroethane(Freon114) | <16 | ppbv | 16 | 76-14-2 | <112 | 10/16/2015 | CW |
| 1,4-Dioxane | <16 | ppbv | 16 | 123-91-1 | <58 | 10/16/2015 | CW |
| Ethanol | <40 | ppbv | 40 | 64-17-5 | <76 | 10/16/2015 | CW |
| Ethyl Acetate | <16 | ppbv | 16 | 141-78-6 | <58 | 10/16/2015 | CW |
| Ethylbenzene | 7500* | ppbv | 16 | 100-41-4 | 32000* | 10/16/2015 | CW |
| 4-Ethyltoluene | 990 | ppbv | 16 | 622-96-8 | 4900 | 10/16/2015 | CW |
| Heptane | 24000* | ppbv | 16 | 142-82-5 | 100000* | 10/16/2015 | CW |
| Hexachlorobutadiene | <16 | ppbv | 16 | 87-68-3 | <170 | 10/16/2015 | CW |
| Hexane | 71000* | ppbv | 16 | 110-54-3 | 250000* | 10/16/2015 | CW |
| 2-Hexanone | <16 | ppbv | 16 | 591-78-6 | <66 | 10/16/2015 | CW |
| Isopropyl Alcohol | <16 | ppbv | 16 | 67-63-0 | <40 | 10/16/2015 | CW |
| Methyl ethyl ketone | <16 | ppbv | 16 | 78-93-3 | <48 | 10/16/2015 | CW |
| Methyl Isobutyl Ketone | <16 | ppbv | 16 | 108-10-1 | <66 | 10/16/2015 | CW |
| Methyl Tert Butyl Ether | <16 | ppbv | 16 | 1634-04-4 | <58 | 10/16/2015 | CW |
| Methylene chloride | <16 | ppbv | 16 | 75-09-2 | <56 | 10/16/2015 | CW |
| Methylmethacrylate | <16 | ppbv | 16 | 80-62-6 | <66 | 10/16/2015 | CW |
| m,p-Xylene | 13000* | ppbv | 16 | 108-38-3/106-42-3 | 58000* | 10/16/2015 | CW |
| Naphthalene | <16 | ppbv | 16 | 91-20-3 | <84 | 10/16/2015 | CW |
| o-Xylene | 3800* | ppbv | 16 | 95-47-6 | 16000* | 10/16/2015 | CW |
| Propylene | <40 | ppbv | 40 | 115-07-1 | <68 | 10/16/2015 | CW |
| Styrene | 120 | ppbv | 16 | 100-42-5 | 520 | 10/16/2015 | CW |
| Tertiary Butyl Alcohol | <16 | ppbv | 16 | 75-65-0 | <48 | 10/16/2015 | CW |
| 1,1,2,2-Tetrachloroethane | <16 | ppbv | 16 | 79-34-5 | <110 | 10/16/2015 | CW |
| Tetrachloroethylene | <3.2 | ppbv | 3.2 | 127-18-4 | <22 | 10/16/2015 | CW |
| Tetrahydrofuran | <16 | ppbv | 16 | 109-99-9 | <48 | 10/16/2015 | CW |
| Toluene | 14000* | ppbv | 16 | 108-88-3 | 53000* | 10/16/2015 | CW |
| trans-1,2-Dichloroethylene | <16 | ppbv | 16 | 156-60-5 | <64 | 10/16/2015 | CW |

**Brighton Analytical LLC**
2105 Pless Drive
Brighton, Michigan 48114
Phone: (810)229-7575 (810)229-8650
e-mail:bai-brighton@sbcglobal.net
MDNRE Certified #9404
NELAC Accredited #176507

Sample Date 10/6/2015
Submit Date 10/7/2015
Report Date: 10/20/2015

PM Environmental, Inc.
4080 W. 11 Mile Rd.
Berkley, MI 48072

BA Project # **36263**
BA Sample ID **CC00650**
Method **TO15**

Project Name: **Beacon & Bridge #8**
Project Number: **01-4982-0-003**
Sample ID: **SG-12**

| Analyte Name | ppbv Result | Units | RL | CAS Number | ug/m3 Result | Date Analyzed | Analyst |
|---|---|---|---|---|---|---|---|
| **Volatile TO15 Analysis** | | | | | | | |
| trans-1,3-Dichloropropene | <16 | ppbv | 16 | 10061-02-6 | <72 | 10/16/2015 | CW |
| 1,2,4-Trichlorobenzene | <16 | ppbv | 16 | 120-82-1 | <118 | 10/16/2015 | CW |
| 1,1,1-Trichloroethane | <16 | ppbv | 16 | 71-55-6 | <88 | 10/16/2015 | CW |
| 1,1,2-Trichloroethane | <16 | ppbv | 16 | 79-00-5 | <88 | 10/16/2015 | CW |
| Trichloroethylene | <3.2 | ppbv | 3.2 | 79-01-6 | <17.2 | 10/16/2015 | CW |
| Trichlorofluoromethane | <16 | ppbv | 16 | 75-69-4 | <90 | 10/16/2015 | CW |
| 1,1,2-Trichlorotrifluoroethane(Freon113) | <16 | ppbv | 16 | 76-13-1 | <122 | 10/16/2015 | CW |
| 1,3,5-Trimethylbenzene | 110 | ppbv | 16 | 108-67-8 | 540 | 10/16/2015 | CW |
| 1,2,4-Trimethylbenzene | 150 | ppbv | 16 | 95-63-6 | 750 | 10/16/2015 | CW |
| 2,2,4-Trimethylpentane | 31000* | ppbv | 16 | 540-84-1 | 150000* | 10/16/2015 | CW |
| Vinyl Acetate | <16 | ppbv | 16 | 108-05-4 | <56 | 10/16/2015 | CW |
| Vinyl chloride | <16 | ppbv | 16 | 75-01-4 | <40 | 10/16/2015 | CW |
| Xylenes(total) | 16800* | ppbv | 16 | 1330-20-7 | 74000* | 10/16/2015 | CW |

RL=Reported detection limit for analytical method requested. Some compounds require special analytical methods to achieve MDNR designated target detection limits (TDL).

Elevated volatile dl due to sample matrix.
*Over range of curve

Released by [signature]
Date 10/20/15

Brighton Analytical L.L.C.

# BRIGHTON ANALYTICAL, LLC

# QUALITY ASSURANCE/QUALITY CONTROL

# GC/MS

# METHOD TO 15

## REPRESENTATIVE BATCH PRECISION AND ACCURACY QUALITY CONTROL SUMMARY

Analysis Date: October 16, 2015 Spike Std. ID: 2516.2 Inst./Detec: HP7890/5973 Vol4

Laboratory ID: LCS Matrix: AIR Analyst: CW

| | Matrix Spike - Precision | | | Matrix spike - Accuracy | | | | | |
|---|---|---|---|---|---|---|---|---|---|
| | Spike 1 ug/m3 | Spike 2 ug/m3 | Relative Percent Difference +/- 20% | Spk Conc ug/m3 | % Recovery | % Recovery | Range (%) | LCS +/- 20% | Method Blank |
| d4-1,2-Dichloroethane | 58.4 | 58.4 | 0.0 | 50 | 117 | 117 | 70-130 | 86% | 85% |
| d8-Toluene | 49.7 | 53.6 | 7.6 | 50 | 99 | 107 | 70-130 | 104% | 89% |
| 4-Bromofluorobenzene | 46.2 | 46.2 | 0.0 | 50 | 92 | 92 | 70-130 | 85% | 100% |
| COMPOUNDS | | | | | | | | | |
| 1,1- Dichloroethene | 24.2 | 25.6 | 5.6 | 25 | 97% | 102% | 70-130 | 97% | <2 |
| 1,1- Dichloroethane | 23.4 | 26.2 | 11.3 | 25 | 94% | 105% | 70-130 | 94% | <2 |
| Chloroform | 23.5 | 26.6 | 13.1 | 25 | 94% | 107% | 70-130 | 94% | <2 |
| 1,2- Dichlororethane | 22.6 | 26.8 | 17.0 | 25 | 90% | 107% | 70-130 | 90% | <2 |
| Carbon tetrachloride | 26.3 | 22.8 | 14.3 | 25 | 105% | 91% | 70-130 | 105% | <2 |
| cis 1,3 Dichloropropene | 20.6 | 20.5 | 0.6 | 25 | 83% | 82% | 70-130 | 82% | <2 |
| Trichloroethene | 22.2 | 19.3 | 14.0 | 25 | 89% | 77% | 70-130 | 89% | <2 |
| Tetrachloroethane | 23.4 | 19.7 | 17.2 | 25 | 94% | 79% | 70-130 | 94% | <2 |
| 1,3- Dichlorobenzene | 21.7 | 22.2 | 2.3 | 25 | 87% | 89% | 70-130 | 87% | <2 |
| 1,4- Dichlorobenzene | 21.3 | 21.6 | 1.4 | 25 | 85% | 86% | 70-130 | 85% | <2 |
| 1,2-Dichlorobenzene | 21.3 | 21.6 | 1.4 | 25 | 85% | 86% | 70-130 | 85% | <2 |

Comments: _____

# GC/MS

# METHOD TO 15

## REPRESENTATIVE BATCH PRECISION AND ACCURACY QUALITY CONTROL SUMMARY

Analysis Date: October 16, 2015 Spike Std. ID: 2516.2 Inst /Detec: HP7890/5973 Vol4

Laboratory ID: LCS Matrix: AIR Analyst: CW

| | Matrix Spike - Precision | | | Matrix spike - Accuracy | | | | | |
|---|---|---|---|---|---|---|---|---|---|
| | Spike 1 ug/m3 | Spike 2 ug/m3 | Relative Percent Difference +/- 20% | Spk Conc ug/m3 | % Recovery | % Recovery | Range (%) | LCS +/- 20% | Method Blank |
| d4-1,2-Dichloroethane | 58.4 | 58.4 | 0.0 | 50 | 117 | 117 | 70-130 | 86% | 85% |
| d8-Toluene | 49.7 | 53.6 | 7.6 | 50 | 99 | 107 | 70-130 | 104% | 89% |
| 4-Bromofluorobenzene | 46.2 | 46.2 | 0.0 | 50 | 92 | 92 | 70-130 | 85% | 100% |
| **COMPOUNDS** | | | | | | | | | |
| 1,1- Dichloroethene | 24.2 | 25.6 | 5.6 | 25 | 97% | 102% | 70-130 | 97% | <2 |
| 1,1- Dichloroethane | 23.4 | 26.2 | 11.3 | 25 | 94% | 105% | 70-130 | 94% | <2 |
| Chloroform | 23.5 | 26.8 | 13.1 | 25 | 94% | 107% | 70-130 | 94% | <2 |
| 1,2- Dichlororethane | 22.6 | 26.8 | 17.0 | 25 | 90% | 107% | 70-130 | 90% | <2 |
| Carbon tetrachloride | 26.3 | 22.8 | 14.3 | 25 | 105% | 91% | 70-130 | 105% | <2 |
| cis 1,3 Dichloropropene | 20.6 | 20.5 | 0.6 | 25 | 83% | 82% | 70-130 | 82% | <2 |
| Trichloroethene | 22.2 | 19.3 | 14.0 | 25 | 89% | 77% | 70-130 | 89% | <2 |
| Tetrachloroethane | 23.4 | 19.7 | 17.2 | 25 | 94% | 79% | 70-130 | 94% | <2 |
| 1,3- Dichlorobenzene | 21.7 | 22.2 | 2.3 | 25 | 87% | 89% | 70-130 | 87% | <2 |
| 1,4- Dichlorobenzene | 21.3 | 21.6 | 1.4 | 25 | 85% | 86% | 70-130 | 85% | <2 |
| 1,2-Dichlorobenzene | 21.3 | 21.6 | 1.4 | 25 | 85% | 86% | 70-130 | 85% | <2 |

Comments: _____

Brighton Analytical L.L.C.™
2105 Pless Drive · Brighton, Michigan 48114 · Phone (810) 229-7575 · Fax (810) 229-8650 · E-mail bal-brighton@sbcglobal.net

October 12, 2015

PM Environmental, Inc.
4080 W. 11 Mile Rd.
Berkley, MI 48072

Subject: B&B #8
01-4982-0-003

Dear Ms. Santiago :

Thank you for making Brighton Analytical, L.L.C. your laboratory of choice. Attached are the results for the samples submitted on 10/07/2015 for the above mentioned project. NELAP/TNI Accredited Analysis and MDEQ Drinking Water Certified Analysis will be identified in their respective reporting formats. Hard copies can be supplied at your request for a fee of $20.00 per copy.

The invoice for this project will be emailed separately. If you have any questions concerning the data or invoice, please don't hesitate to contact our office. We welcome your comments and suggestions to improve our quality systems. Please reference Brighton Analytical, L.L.C. Project ID 36259 when calling or emailing. We thank you for this opportunity to partner with you on this project and hope to work with you again in the future.

Sincerely,
Brighton Analytical, L.L.C.

DEQ
NELAP ACCREDITED TNI LABORATORY
Certified WBENC Women's Business Enterprise

**Brighton Analytical, L.L.C.™**
Email: bai-brighton@sbcglobal.net
2105 Pless Drive
Brighton, MI 48114
Phone: 810-229-7575
Fax: 810-229-8650

BA PROJECT #: 36259

PAGE 1 OF 1

PROJECT NAME: BAB #8

PROJECT #: 01-4982-0-003

PO #: (PLEASE NOTE IF DIFFERENT BILLING ADDRESS)

**ABBREVIATIONS FOR MATRIX**
S = Solid
L = Liquid
DW = Drinking $H_2O$
O = Oil
P = Wipe
A = Air (Tedlar Bag)
F = Filter
T = Tube
M = Misc.

Sample collected by: CW/RS

**REQUESTED TURNAROUND:** (circle one)
Rush: 1-3 business days (verify with lab & specify date needed)
1 Day = 2.5X Cost 2 Day = 2X Cost 3 Day = 1.5X Cost
Standard: 5 business days

IF RUSH, approved by: _____

**Analysis Requested/Method**

**COMPANY/MAILING ADDRESS:**
PM ENV
4080 11 MILE
BERKLEY MI
ATTN: CHRISTIE SANTIAGO
PHONE: 248-336-9988
FAX OR EMAIL: SANTIAGO@PMENV.COM

Samples received within hold time? yes ☑ no ☐
Temperature of samples °C: 4
pHs verified in login? yes ☐ no ☑
Headspace/bubbles in VOA's? yes ☐ no ☑ n/a ☐
Sample containers and COC match? yes ☑ no ☐

| Brighton ID # | Sample Description | Sample Coll. Date | Sample Coll. Time | VOA'S (PRESERVED? Y N N/A) | HDPE UNPRESERVED | HDPE $HNO_3$ | HDPE $H_2SO_4$ | HDPE NAOH | AMBER (PRESERVED?) | GLASS, NO PRESERVATIVE | STERILIZED BACTERIA | MEOH Preserved Y N | Sample Matrix | GAS VOC |
|---|---|---|---|---|---|---|---|---|---|---|---|---|---|---|
| 1) CC00625 | MW-1 | 10-5 | 1555 | 2 | | | | | | | | | L | X |
| 2) 26 | MW-4 | 10-5 | 1620 | 2 | | | | | | | | | | X |
| 3) 27 | MW-7 | 10-5 | 1401 | 2 | | | | | | | | | | X |
| 4) 28 | MW-5 | 10-5 | 1425 | 2 | | | | | | | | | | X |
| 5) 29 | MW-8 | 10-5 | 1455 | 2 | | | | | | | | | | X |
| 6) 30 | MW-9 | 10-5 | 1536 | 2 | | | | | | | | | | X |
| 7) 31 | MW-12 | 10-5 | 1125 | 2 | | | | | | | | | | X |
| 8) 32 | MW-11 | 10-5 | 1150 | 2 | | | | | | | | | | X |
| 9) 33 | MW-13 | 10-5 | 1325 | 2 | | | | | | | | | | X |
| 10) 34 | MW-14 | 10-5 | 1215 | 2 | | | | | | | | | | X |

**BILLING ADDRESS (IF REQUIRED):**

**Drinking $H_2O$:**
Fax to LCHD? yes ☐ no ☐
Chlorinated Water Supply? yes ☐ no ☐
AMT.: _____

MCL Failure: yes ☐ no ☐
Client Notified (date/time/initials): _____

**Special Instructions:**

***Please fill out the Chain of Custody completely and review. Incorrect or incomplete information will result in a "hold" on all analyses.***

| Trans. # | RELINQUISHED BY: | RECEIVED BY: | DATE: | TIME: | Trans. # | RELINQUISHED BY: | RECEIVED BY: | DATE: | TIME: |
|---|---|---|---|---|---|---|---|---|---|
| 1 | [signature] | PME Storage | 10-5-15 | 1730 | 3 | [signature] | [signature] | 10/7/15 | 300 |
| 2 | PME STORAGE | [signature] | 10-7-15 | 1300 | 4 | | | | |

Brighton Analytical, L.L.C.
2105 Pless Drive
Brighton, Michigan 48116
Phone: (810) 229-7575 FAX: (810) 229-8650
e-mail: bai-brighton@sbcglobal.net

To: PM Environmental, Inc.
4080 W. 11 Mile Rd.
Berkley, MI 48072

Sample Date: 10/5/2015
Submit Date: 10/7/2015
Report Date: 10/12/2015

BA Report Number: **36259**
BA Sample ID: **CC00625**

Project Name: **B&B #8**
Project Number: **01-4982-0-003**
Sample ID: **MW-1**

| Parameters | Results | Units | DL | Method Reference | Analyst | Analysis Date |
|---|---|---|---|---|---|---|
| **Volatile Analysis** | | | | | | |
| Benzene | **5400** | ug/L | 50 | SW846 8260B | RG | 10/12/2015 |
| 1,2-Dibromoethane | **<50** | ug/L | 50 | SW846 8260B | RG | 10/12/2015 |
| 1,2-Dichloroethane | **<50** | ug/L | 50 | SW846 8260B | RG | 10/12/2015 |
| Ethanol(Ethyl alcohol) | **<50000** | ug/L | 50000 | SW846 8260B | RG | 10/12/2015 |
| Ethylbenzene | **2400** | ug/L | 50 | SW846 8260B | RG | 10/12/2015 |
| Isopropylbenzene | **62** | ug/L | 50 | SW846 8260B | RG | 10/12/2015 |
| 2-Methylnaphthalene | **<300** | ug/L | 300 | SW846 8260B | RG | 10/12/2015 |
| MTBE | **<50** | ug/L | 50 | SW846 8260B | RG | 10/12/2015 |
| Naphthalene | **<300** | ug/L | 300 | SW846 8260B | RG | 10/12/2015 |
| n-Propylbenzene | **130** | ug/L | 50 | SW846 8260B | RG | 10/12/2015 |
| Toluene | **870** | ug/L | 50 | SW846 8260B | RG | 10/12/2015 |
| 1,2,3-Trimethylbenzene | **360** | ug/L | 50 | SW846 8260B | RG | 10/12/2015 |
| 1,2,4-Trimethylbenzene | **1000** | ug/L | 50 | SW846 8260B | RG | 10/12/2015 |
| 1,3,5-Trimethylbenzene | **200** | ug/L | 50 | SW846 8260B | RG | 10/12/2015 |
| Xylenes(total) | **3700** | ug/L | 200 | SW846 8260B | RG | 10/12/2015 |

DL=Reported detection limit for analytical method requested. Some compounds require special analytical methods to achieve MDNR designated target detection limits (TDL).

Released by: [illegible]
Date: 10/12/15

Elevated volatile dl due to sample matrix.

Brighton Analytical L.L.C.™

**Brighton Analytical, L.L.C.**
**2105 Pless Drive**
**Brighton, Michigan 48116**
**Phone: (810) 229-7575 FAX: (810) 229-8650**
e-mail: bai-brighton@sbcglobal.net

To: PM Environmental, Inc.
4080 W. 11 Mile Rd.
Berkley, MI 48072

Sample Date: 10/5/2015
Submit Date: 10/7/2015
Report Date: 10/12/2015

BA Report Number: **36259**
BA Sample ID: **CC00626**

Project Name: **B&B #8**
Project Number: **01-4982-0-003**
Sample ID: **MW-4**

| Parameters | Results | Units | DL | Method Reference | Analyst | Analysis Date |
|---|---|---|---|---|---|---|
| **Volatile Analysis** | | | | | | |
| Benzene | **3900** | ug/L | 20 | SW846 8260B | RG | 10/8/2015 |
| 1,2-Dibromoethane | **<20** | ug/L | 20 | SW846 8260B | RG | 10/8/2015 |
| 1,2-Dichloroethane | **<20** | ug/L | 20 | SW846 8260B | RG | 10/8/2015 |
| Ethanol(Ethyl alcohol) | **<20000** | ug/L | 20000 | SW846 8260B | RG | 10/8/2015 |
| Ethylbenzene | **3600** | ug/L | 20 | SW846 8260B | RG | 10/8/2015 |
| Isopropylbenzene | **110** | ug/L | 20 | SW846 8260B | RG | 10/8/2015 |
| 2-Methylnaphthalene | **<100** | ug/L | 100 | SW846 8260B | RG | 10/8/2015 |
| MTBE | **<20** | ug/L | 20 | SW846 8260B | RG | 10/8/2015 |
| Naphthalene | **560** | ug/L | 100 | SW846 8260B | RG | 10/8/2015 |
| n-Propylbenzene | **290** | ug/L | 20 | SW846 8260B | RG | 10/8/2015 |
| Toluene | **210** | ug/L | 20 | SW846 8260B | RG | 10/8/2015 |
| 1,2,3-Trimethylbenzene | **960** | ug/L | 20 | SW846 8260B | RG | 10/8/2015 |
| 1,2,4-Trimethylbenzene | **2400** | ug/L | 20 | SW846 8260B | RG | 10/8/2015 |
| 1,3,5-Trimethylbenzene | **490** | ug/L | 20 | SW846 8260B | RG | 10/8/2015 |
| Xylenes(total) | **5600** | ug/L | 60 | SW846 8260B | RG | 10/8/2015 |

DL=Reported detection limit for analytical method requested. Some compounds require special analytical methods to achieve MDNR designated target detection limits (TDL).

Released by: [signature]
Date: 10/12/15

Elevated volatile dl due to sample matrix.

**Brighton Analytical, L.L.C.**
**2105 Pless Drive**
**Brighton, Michigan 48116**
**Phone: (810) 229-7575 FAX: (810) 229-8650**
e-mail: bai-brighton@sbcglobal.net

Sample Date: 10/5/2015
Submit Date: 10/7/2015
Report Date: 10/12/2015

To: PM Environmental, Inc.
4080 W. 11 Mile Rd.
Berkley, MI 48072

BA Report Number: **36259**
BA Sample ID: **CC00627**

Project Name: **B&B #8**
Project Number: **01-4982-0-003**
Sample ID: **MW-7**

| Parameters | Results | Units | DL | Method Reference | Analyst | Analysis Date |
|---|---|---|---|---|---|---|
| **Volatile Analysis** | | | | | | |
| Benzene | **43** | ug/L | 1 | SW846 8260B | RG | 10/8/2015 |
| 1,2-Dibromoethane | **<1** | ug/L | 1 | SW846 8260B | RG | 10/8/2015 |
| 1,2-Dichloroethane | **<1** | ug/L | 1 | SW846 8260B | RG | 10/8/2015 |
| Ethanol(Ethyl alcohol) | **<1000** | ug/L | 1000 | SW846 8260B | RG | 10/8/2015 |
| Ethylbenzene | **<1** | ug/L | 1 | SW846 8260B | RG | 10/8/2015 |
| Isopropylbenzene | **<1** | ug/L | 1 | SW846 8260B | RG | 10/8/2015 |
| 2-Methylnaphthalene | **<5** | ug/L | 5 | SW846 8260B | RG | 10/8/2015 |
| MTBE | **<1** | ug/L | 1 | SW846 8260B | RG | 10/8/2015 |
| Naphthalene | **<5** | ug/L | 5 | SW846 8260B | RG | 10/8/2015 |
| n-Propylbenzene | **<1** | ug/L | 1 | SW846 8260B | RG | 10/8/2015 |
| Toluene | **<1** | ug/L | 1 | SW846 8260B | RG | 10/8/2015 |
| 1,2,3-Trimethylbenzene | **<1** | ug/L | 1 | SW846 8260B | RG | 10/8/2015 |
| 1,2,4-Trimethylbenzene | **<1** | ug/L | 1 | SW846 8260B | RG | 10/8/2015 |
| 1,3,5-Trimethylbenzene | **<1** | ug/L | 1 | SW846 8260B | RG | 10/8/2015 |
| Xylenes(total) | **<3** | ug/L | 3 | SW846 8260B | RG | 10/8/2015 |

DL=Reported detection limit for analytical method requested. Some compounds require special analytical methods to achieve MDNR designated target detection limits (TDL).

Released by:

Date: 10/12/15

**Brighton Analytical, L.L.C.**
**2105 Pless Drive**
**Brighton, Michigan 48116**
**Phone: (810) 229-7575 FAX: (810) 229-8650**
e-mail: bai-brighton@sbcglobal.net

Sample Date: 10/5/2015
Submit Date: 10/7/2015
Report Date: 10/12/2015

To: PM Environmental, Inc.
4080 W. 11 Mile Rd.
Berkley, MI 48072

BA Report Number: **36259**
BA Sample ID: **CC00628**

Project Name: **B&B #8**
Project Number: **01-4982-0-003**
Sample ID: **MW-5**

| Parameters | Results | Units | DL | Method Reference | Aualyst | Analysis Date |
|---|---|---|---|---|---|---|
| **Volatile Analysis** | | | | | | |
| Benzene | **240** | ug/L | 100 | SW846 8260B | RG | 10/12/2015 |
| 1,2-Dibromoethane | **<100** | ug/L | 100 | SW846 8260B | RG | 10/12/2015 |
| 1,2-Dichloroethane | **<100** | ug/L | 100 | SW846 8260B | RG | 10/12/2015 |
| Ethanol(Ethyl alcohol) | **<100000** | ug/L | 100000 | SW846 8260B | RG | 10/12/2015 |
| Ethylbenzene | **3500** | ug/L | 100 | SW846 8260B | RG | 10/12/2015 |
| Isopropylbenzene | **120** | ug/L | 100 | SW846 8260B | RG | 10/12/2015 |
| 2-Methylnaphthalene | **<500** | ug/L | 500 | SW846 8260B | RG | 10/12/2015 |
| MTBE | **<100** | ug/L | 100 | SW846 8260B | RG | 10/12/2015 |
| Naphthalene | **540** | ug/L | 500 | SW846 8260B | RG | 10/12/2015 |
| n-Propylbenzene | **310** | ug/L | 100 | SW846 8260B | RG | 10/12/2015 |
| Toluene | **11000** | ug/L | 100 | SW846 8260B | RG | 10/12/2015 |
| 1,2,3-Trimethylbenzene | **940** | ug/L | 100 | SW846 8260B | RG | 10/12/2015 |
| 1,2,4-Trimethylbenzene | **2400** | ug/L | 100 | SW846 8260B | RG | 10/12/2015 |
| 1,3,5-Trimethylbenzene | **620** | ug/L | 100 | SW846 8260B | RG | 10/12/2015 |
| Xylenes(total) | **16000** | ug/L | 300 | SW846 8260B | RG | 10/12/2015 |

DL=Reported detection limit for analytical method requested. Some compounds require special analytical methods to achieve MDNR designated target detection limits (TDL).

Released by: [illegible]
Date: 10/12/15

Elevated volatile dl due to sample matrix.

**Brighton Analytical, L.L.C.**
**2105 Pless Drive**
**Brighton, Michigan 48116**
**Phone: (810) 229-7575 FAX: (810) 229-8650**
e-mail: bai-brighton@sbcglobal.net

Sample Date: 10/5/2015
Submit Date: 10/7/2015
Report Date: 10/12/2015

To: PM Environmental, Inc.
4080 W. 11 Mile Rd.
Berkley, MI 48072

BA Report Number: **36259**
BA Sample ID: **CC00629**

Project Name: **B&B #8**
Project Number: **01-4982-0-003**
Sample ID: **MW-8**

| Parameters | Results | Units | DL | Method Reference | Analyst | Analysis Date |
|---|---|---|---|---|---|---|
| **Volatile Analysis** | | | | | | |
| Benzene | <1 | ug/L | 1 | SW846 8260B | RG | 10/8/2015 |
| 1,2-Dibromoethane | <1 | ug/L | 1 | SW846 8260B | RG | 10/8/2015 |
| 1,2-Dichloroethane | <1 | ug/L | 1 | SW846 8260B | RG | 10/8/2015 |
| Ethanol(Ethyl alcohol) | <1000 | ug/L | 1000 | SW846 8260B | RG | 10/8/2015 |
| Ethylbenzene | <1 | ug/L | 1 | SW846 8260B | RG | 10/8/2015 |
| Isopropylbenzene | <1 | ug/L | 1 | SW846 8260B | RG | 10/8/2015 |
| 2-Methylnaphthalene | <5 | ug/L | 5 | SW846 8260B | RG | 10/8/2015 |
| MTBE | <1 | ug/L | 1 | SW846 8260B | RG | 10/8/2015 |
| Naphthalene | <5 | ug/L | 5 | SW846 8260B | RG | 10/8/2015 |
| n-Propylbenzene | <1 | ug/L | 1 | SW846 8260B | RG | 10/8/2015 |
| Toluene | <1 | ug/L | 1 | SW846 8260B | RG | 10/8/2015 |
| 1,2,3-Trimethylbenzene | <1 | ug/L | 1 | SW846 8260B | RG | 10/8/2015 |
| 1,2,4-Trimethylbenzene | <1 | ug/L | 1 | SW846 8260B | RG | 10/8/2015 |
| 1,3,5-Trimethylbenzene | <1 | ug/L | 1 | SW846 8260B | RG | 10/8/2015 |
| Xylenes(total) | <3 | ug/L | 3 | SW846 8260B | RG | 10/8/2015 |

DL=Reported detection limit for analytical method requested. Some compounds require special analytical methods to achieve MDNR designated target detection limits (TDL).

Released by: UWood
Date: 10/12/15

**Brighton Analytical, L.L.C.**
**2105 Pless Drive**
**Brighton, Michigan 48116**
**Phone: (810) 229-7575 FAX: (810) 229-8650**
e-mail: bai-brighton@sbcglobal.net

Sample Date: 10/5/2015
Submit Date: 10/7/2015
Report Date: 10/12/2015

To: PM Environmental, Inc.
4080 W. 11 Mile Rd.
Berkley, MI 48072

BA Report Number: **36259**
BA Sample ID: **CC00630**

Project Name: **B&B #8**
Project Number: **01-4982-0-003**
Sample ID: **MW-9**

| Parameters | Results | Units | DL | Method Reference | Analyst | Analysis Date |
|---|---|---|---|---|---|---|
| **Volatile Analysis** | | | | | | |
| Benzene | <1 | ug/L | 1 | SW846 8260B | RG | 10/8/2015 |
| 1,2-Dibromoethane | <1 | ug/L | 1 | SW846 8260B | RG | 10/8/2015 |
| 1,2-Dichloroethane | <1 | ug/L | 1 | SW846 8260B | RG | 10/8/2015 |
| Ethanol(Ethyl alcohol) | <1000 | ug/L | 1000 | SW846 8260B | RG | 10/8/2015 |
| Ethylbenzene | <1 | ug/L | 1 | SW846 8260B | RG | 10/8/2015 |
| Isopropylbenzene | <1 | ug/L | 1 | SW846 8260B | RG | 10/8/2015 |
| 2-Methylnaphthalene | <5 | ug/L | 5 | SW846 8260B | RG | 10/8/2015 |
| MTBE | <1 | ug/L | 1 | SW846 8260B | RG | 10/8/2015 |
| Naphthalene | <5 | ug/L | 5 | SW846 8260B | RG | 10/8/2015 |
| n-Propylbenzene | <1 | ug/L | 1 | SW846 8260B | RG | 10/8/2015 |
| Toluene | <1 | ug/L | 1 | SW846 8260B | RG | 10/8/2015 |
| 1,2,3-Trimethylbenzene | <1 | ug/L | 1 | SW846 8260B | RG | 10/8/2015 |
| 1,2,4-Trimethylbenzene | <1 | ug/L | 1 | SW846 8260B | RG | 10/8/2015 |
| 1,3,5-Trimethylbenzene | <1 | ug/L | 1 | SW846 8260B | RG | 10/8/2015 |
| Xylenes(total) | <3 | ug/L | 3 | SW846 8260B | RG | 10/8/2015 |

DL=Reported detection limit for analytical method requested. Some compounds require special analytical methods to achieve MDNR designated target detection limits (TDL).

Released by: [illegible]
Date: 10/12/15

**Brighton Analytical, L.L.C.**
**2105 Pless Drive**
**Brighton, Michigan 48116**
**Phone: (810) 229-7575 FAX: (810) 229-8650**
e-mail: bai-brighton@sbcglobal.net

Sample Date: 10/5/2015
Submit Date: 10/7/2015
Report Date: 10/12/2015

To: PM Environmental, Inc.
4080 W. 11 Mile Rd.
Berkley, MI 48072

BA Report Number: **36259**
BA Sample ID: **CC00631**

Project Name: **B&B #8**
Project Number: **01-4982-0-003**
Sample ID: **MW-12**

| Parameters | Results | Units | DL | Method Reference | Analyst | Analysis Date |
|---|---|---|---|---|---|---|
| **Volatile Analysis** | | | | | | |
| Benzene | **2400** | ug/L | 20 | SW846 8260B | RG | 10/8/2015 |
| 1,2-Dibromoethane | **<20** | ug/L | 20 | SW846 8260B | RG | 10/8/2015 |
| 1,2-Dichloroethane | **<20** | ug/L | 20 | SW846 8260B | RG | 10/8/2015 |
| Ethanol(Ethyl alcohol) | **<20000** | ug/L | 20000 | SW846 8260B | RG | 10/8/2015 |
| Ethylbenzene | **930** | ug/L | 20 | SW846 8260B | RG | 10/8/2015 |
| Isopropylbenzene | **49** | ug/L | 20 | SW846 8260B | RG | 10/8/2015 |
| 2-Methylnaphthalene | **<100** | ug/L | 100 | SW846 8260B | RG | 10/8/2015 |
| MTBE | **<20** | ug/L | 20 | SW846 8260B | RG | 10/8/2015 |
| Naphthalene | **160** | ug/L | 100 | SW846 8260B | RG | 10/8/2015 |
| n-Propylbenzene | **110** | ug/L | 20 | SW846 8260B | RG | 10/8/2015 |
| Toluene | **3100** | ug/L | 20 | SW846 8260B | RG | 10/8/2015 |
| 1,2,3-Trimethylbenzene | **260** | ug/L | 20 | SW846 8260B | RG | 10/8/2015 |
| 1,2,4-Trimethylbenzene | **660** | ug/L | 20 | SW846 8260B | RG | 10/8/2015 |
| 1,3,5-Trimethylbenzene | **170** | ug/L | 20 | SW846 8260B | RG | 10/8/2015 |
| Xylenes(total) | **2900** | ug/L | 60 | SW846 8260B | RG | 10/8/2015 |

DL=Reported detection limit for analytical method requested. Some compounds require special analytical methods to achieve MDNR designated target detection limits (TDL).

Released by: LHWood
Date: 10/12/15

Elevated volatile dl due to sample matrix.

**Brighton Analytical, L.L.C.**
**2105 Pless Drive**
**Brighton, Michigan 48116**
**Phone: (810) 229-7575 FAX: (810) 229-8650**
e-mail: bai-brighton@sbcglobal.net

Sample Date: 10/5/2015
Submit Date: 10/7/2015
Report Date: 10/12/2015

To: PM Environmental, Inc.
4080 W. 11 Mile Rd.
Berkley, MI 48072

BA Report Number: **36259**
BA Sample ID: **CC00632**

Project Name: **B&B #8**
Project Number: **01-4982-0-003**
Sample ID: **MW-11**

| Parameters | Results | Units | DL | Method Reference | Analyst | Analysis Date |
|---|---|---|---|---|---|---|
| **Volatile Analysis** | | | | | | |
| Benzene | **11000** | ug/L | 100 | SW846 8260B | RG | 10/12/2015 |
| 1,2-Dibromoethane | **<100** | ug/L | 100 | SW846 8260B | RG | 10/12/2015 |
| 1,2-Dichloroethane | **<100** | ug/L | 100 | SW846 8260B | RG | 10/12/2015 |
| Ethanol(Ethyl alcohol) | **<100000** | ug/L | 100000 | SW846 8260B | RG | 10/12/2015 |
| Ethylbenzene | **280** | ug/L | 100 | SW846 8260B | RG | 10/12/2015 |
| Isopropylbenzene | **<100** | ug/L | 100 | SW846 8260B | RG | 10/12/2015 |
| 2-Methylnaphthalene | **<500** | ug/L | 500 | SW846 8260B | RG | 10/12/2015 |
| MTBE | **<100** | ug/L | 100 | SW846 8260B | RG | 10/12/2015 |
| Naphthalene | **<500** | ug/L | 500 | SW846 8260B | RG | 10/12/2015 |
| n-Propylbenzene | **<100** | ug/L | 100 | SW846 8260B | RG | 10/12/2015 |
| Toluene | **430** | ug/L | 100 | SW846 8260B | RG | 10/12/2015 |
| 1,2,3-Trimethylbenzene | **<100** | ug/L | 100 | SW846 8260B | RG | 10/12/2015 |
| 1,2,4-Trimethylbenzene | **230** | ug/L | 100 | SW846 8260B | RG | 10/12/2015 |
| 1,3,5-Trimethylbenzene | **<100** | ug/L | 100 | SW846 8260B | RG | 10/12/2015 |
| Xylenes(total) | **680** | ug/L | 300 | SW846 8260B | RG | 10/12/2015 |

DL=Reported detection limit for analytical method requested. Some compounds require special analytical methods to achieve MDNR designated target detection limits (TDL).

Released by:

Date: 10/12/15

Elevated volatile dl due to sample matrix.

Brighton Analytical L.L.C.™

**Brighton Analytical, L.L.C.**
**2105 Pless Drive**
**Brighton, Michigan 48116**
**Phone: (810) 229-7575 FAX: (810) 229-8650**
e-mail: bai-brighton@sbcglobal.net

To: PM Environmental, Inc.
4080 W. 11 Mile Rd.
Berkley, MI 48072

Sample Date: 10/5/2015
Submit Date: 10/7/2015
Report Date: 10/12/2015

BA Report Number: **36259**
BA Sample ID: **CC00633**

Project Name: **B&B #8**
Project Number: **01-4982-0-003**
Sample ID: **MW-13**

| Parameters | Results | Units | DL | Method Reference | Analyst | Analysis Date |
|---|---|---|---|---|---|---|
| **Volatile Analysis** | | | | | | |
| Benzene | **3800** | ug/L | 50 | SW846 8260B | RG | 10/12/2015 |
| 1,2-Dibromoethane | **<50** | ug/L | 50 | SW846 8260B | RG | 10/12/2015 |
| 1,2-Dichloroethane | **<50** | ug/L | 50 | SW846 8260B | RG | 10/12/2015 |
| Ethanol(Ethyl alcohol) | **<50000** | ug/L | 50000 | SW846 8260B | RG | 10/12/2015 |
| Ethylbenzene | **<50** | ug/L | 50 | SW846 8260B | RG | 10/12/2015 |
| Isopropylbenzene | **<50** | ug/L | 50 | SW846 8260B | RG | 10/12/2015 |
| 2-Methylnaphthalene | **<300** | ug/L | 300 | SW846 8260B | RG | 10/12/2015 |
| MTBE | **<50** | ug/L | 50 | SW846 8260B | RG | 10/12/2015 |
| Naphthalene | **<300** | ug/L | 300 | SW846 8260B | RG | 10/12/2015 |
| n-Propylbenzene | **<50** | ug/L | 50 | SW846 8260B | RG | 10/12/2015 |
| Toluene | **<50** | ug/L | 50 | SW846 8260B | RG | 10/12/2015 |
| 1,2,3-Trimethylbenzene | **<50** | ug/L | 50 | SW846 8260B | RG | 10/12/2015 |
| 1,2,4-Trimethylbenzene | **<50** | ug/L | 50 | SW846 8260B | RG | 10/12/2015 |
| 1,3,5-Trimethylbenzene | **<50** | ug/L | 50 | SW846 8260B | RG | 10/12/2015 |
| Xylenes(total) | **<200** | ug/L | 200 | SW846 8260B | RG | 10/12/2015 |

DL=Reported detection limit for analytical method requested. Some compounds require special analytical methods to achieve MDNR designated target detection limits (TDL).

Released by: UWood

Date: 10/12/15

Elevated volatile dl due to sample matrix.

**Brighton Analytical, L.L.C.**
**2105 Pless Drive**
**Brighton, Michigan 48116**
**Phone: (810) 229-7575 FAX: (810) 229-8650**
e-mail: bai-brighton@sbcglobal.net

Sample Date: 10/5/2015
Submit Date: 10/7/2015
Report Date: 10/12/2015

To: PM Environmental, Inc.
4080 W. 11 Mile Rd.
Berkley, MI 48072

BA Report Number: **36259**
BA Sample ID: **CC00634**

Project Name: **B&B #8**
Project Number: **01-4982-0-003**
Sample ID: **MW-14**

| Parameters | Results | Units | DL | Method Reference | Analyst | Analysis Date |
|---|---|---|---|---|---|---|
| **Volatile Analysis** | | | | | | |
| Benzene | <1 | ug/L | 1 | SW846 8260B | RG | 10/8/2015 |
| 1,2-Dibromoethane | <1 | ug/L | 1 | SW846 8260B | RG | 10/8/2015 |
| 1,2-Dichloroethane | <1 | ug/L | 1 | SW846 8260B | RG | 10/8/2015 |
| Ethanol(Ethyl alcohol) | <1000 | ug/L | 1000 | SW846 8260B | RG | 10/8/2015 |
| Ethylbenzene | <1 | ug/L | 1 | SW846 8260B | RG | 10/8/2015 |
| Isopropylbenzene | <1 | ug/L | 1 | SW846 8260B | RG | 10/8/2015 |
| 2-Methylnaphthalene | <5 | ug/L | 5 | SW846 8260B | RG | 10/8/2015 |
| MTBE | <1 | ug/L | 1 | SW846 8260B | RG | 10/8/2015 |
| Naphthalene | <5 | ug/L | 5 | SW846 8260B | RG | 10/8/2015 |
| n-Propylbenzene | <1 | ug/L | 1 | SW846 8260B | RG | 10/8/2015 |
| Toluene | <1 | ug/L | 1 | SW846 8260B | RG | 10/8/2015 |
| 1,2,3-Trimethylbenzene | <1 | ug/L | 1 | SW846 8260B | RG | 10/8/2015 |
| 1,2,4-Trimethylbenzene | <1 | ug/L | 1 | SW846 8260B | RG | 10/8/2015 |
| 1,3,5-Trimethylbenzene | <1 | ug/L | 1 | SW846 8260B | RG | 10/8/2015 |
| Xylenes(total) | <3 | ug/L | 3 | SW846 8260B | RG | 10/8/2015 |

DL=Reported detection limit for analytical method requested. Some compounds require special analytical methods to achieve MDNR designated target detection limits (TDL).

Released by: UHood
Date: 10/12/15

Brighton Analytical L.L.C.

# BRIGHTON ANALYTICAL, LLC

# QUALITY ASSURANCE/QUALITY CONTROL

# GC/MS

# VOLATILE METHOD 8260/624

## REPRESENTATIVE BATCH PRECISION AND ACCURACY QUALITY CONTROL SUMMARY

Analysis Date: October 8, 2015 Spike Std. ID: 2500.2 Inst./Detec: HP7890/5975 Vol6

Laboratory ID: CC00667 Matrix: soil Analyst: RG

| | Matrix Spike - Precision | | | Matrix spike - Accuracy | | | | | | |
|---|---|---|---|---|---|---|---|---|---|---|
| | Spike 1 ug/L | Spike 2 ug/L | Relative Percent Difference +/- 20% | Spk Conc ug/L | % Recovery | % Recovery | Range (%) | Sample background ug/L | LCS +/- 20% | Method Blank |
| d4-1,2-Dichloroethane | 49.6 | 50.3 | 1.4 | 50 | 99 | 101 | 70-130 | 99% | 104% | 101% |
| d8-Toluene | 50.2 | 49.7 | 1.0 | 50 | 100 | 99 | 70-130 | 98% | 100% | 100% |
| 4-Bromofluorobenzene | 50.2 | 51.1 | 1.8 | 50 | 100 | 102 | 70-130 | 109% | 102% | 113% |
| COMPOUNDS | | | | | | | | | | |
| 1,1- Dichloroethene | 45.1 | 48.4 | 7.1 | 50 | 90% | 97% | 70-130 | <1 | 96% | <1 |
| 1,1- Dichloroethane | 38.7 | 41.2 | 6.3 | 50 | 77% | 82% | 70-130 | <1 | 93% | <1 |
| Chloroform | 39.4 | 41.0 | 4.0 | 50 | 79% | 82% | 70-130 | <1 | 94% | <1 |
| 1,2- Dichlororethane | 38.8 | 39.1 | 0.8 | 50 | 78% | 78% | 70-130 | <1 | 91% | <1 |
| Carbon tetrachloride | 42.8 | 44.6 | 4.6 | 50 | 85% | 89% | 70-130 | <1 | 98% | <1 |
| 1,2- Dichloropropane | 38.0 | 39.3 | 3.4 | 50 | 76% | 79% | 70-130 | <1 | 89% | <1 |
| cis- 1,3 -dichloropropene | 35.6 | 36.5 | 2.5 | 50 | 71% | 73% | 70-130 | <1 | 89% | <1 |
| Trichloroethene | 40.2 | 42.1 | 4.6 | 50 | 80% | 84% | 70-130 | <1 | 92% | <1 |
| Dibromochloromethane | 35.9 | 36.8 | 2.5 | 50 | 72% | 74% | 70-130 | <1 | 88% | <1 |
| 1,1,2- Trichloroehtane | 37.4 | 37.5 | 0.3 | 50 | 75% | 75% | 70-130 | <1 | 88% | <1 |
| Tetrachloroethane | 36.2 | 37.4 | 3.3 | 50 | 72% | 75% | 70-130 | <1 | 96% | <1 |
| 1,1,2,2 -Tetrachloroethane | 36.9 | 37.7 | 2.1 | 50 | 74% | 75% | 70-130 | <1 | 86% | <1 |
| Chlorobenzene | 38.6 | 40.1 | 3.8 | 50 | 77% | 80% | 70-130 | <1 | 93% | <1 |
| 1,3- Dichlorobenzene | 38.6 | 40.4 | 4.6 | 50 | 77% | 81% | 70-130 | <1 | 93% | <1 |
| 1,4- Dichlorobenzene | 38.2 | 40.4 | 5.8 | 50 | 76% | 81% | 70-130 | <1 | 91% | <1 |
| 1,2-Dichlorobenzene | 39.0 | 39.8 | 2.0 | 50 | 78% | 80% | 70-130 | <1 | 93% | <1 |

ug/L is equivalent to ppb

Comments:

Brighton Analytical L.L.C.™
2105 Pless Drive · Brighton, Michigan 48114 · Phone (810) 229-7575 · Fax (810) 229-8650 · E-mail bai-brighton@sbcglobal.net

January 22, 2016

PM Environmental, Inc.
4080 W. 11 Mile Rd.
Berkley, MI 48072

Subject: Beacon and Bridge #8
01-4982-0-006

Dear Ms. Santiago :

Thank you for making Brighton Analytical, L.L.C. your laboratory of choice. Attached are the results for the samples submitted on 01/18/2016 for the above mentioned project. NELAP/TNI Accredited Analysis and MDEQ Drinking Water Certified Analysis will be identified in their respective reporting formats. Hard copies can be supplied at your request for a fee of $20.00 per copy.

The invoice for this project will be emailed separately. If you have any questions concerning the data or invoice, please don't hesitate to contact our office. We welcome your comments and suggestions to improve our quality systems. Please reference Brighton Analytical, L.L.C. Project ID 37380 when calling or emailing. We thank you for this opportunity to partner with you on this project and hope to work with you again in the future.

Sincerely,
Brighton Analytical, L.L.C.

DEQ
NELAP ACCREDITED LABORATORY
Certified WBENC Women's Business Enterprise

**Brighton Analytical, L.L.C.™**
Email: bai-brighton@sbcglobal.net
2105 Pless Drive
Brighton, MI 48114
Phone: 810-229-7575
Fax: 810-229-8650

BA PROJECT #: 37380

**ABBREVIATIONS FOR MATRIX**
S = Solid
L = Liquid
DW = Drinking $H_2O$
O = Oil
P = Wipe
A = Air (Tedlar Bag)
F = Filter
T = Tube
M = Misc.

PROJECT NAME: Beacon And Bridge #8

PROJECT #: 01-4982-0-006

PO #: (PLEASE NOTE IF DIFFERENT BILLING ADDRESS)

Sample collected by: SS / CW / DS

**REQUESTED TURNAROUND:** (circle one)
Rush: 1-3 business days (verify with lab & specify date needed)
1 Day = 2.5X Cost 2 Day = 2X Cost 3 Day = 1.5X Cost
Standard: 5 business days

If RUSH, approved by: _____

**Analysis Requested/Method**

| Brighton ID # | Sample Description | Sample Coll. Date | Sample Coll. Time | VOA'S (PRES) Y N N/A | HDPE UNPRESERVED | HDPE $HNO_3$ | HDPE $H_2SO_4$ | HDPE NAOH | AMBER PRESERVED? | GLASS, NO PRESERVATIVE | STERILIZED BACTERIA | MEOH Preserved Y N | Sample Matrix | Unleaded And Leaded GAS VOC | GRO | | | | | | HOLD |
|---|---|---|---|---|---|---|---|---|---|---|---|---|---|---|---|---|---|---|---|---|---|
| 1) CC04643 | SG-14 6'-7' (SB) | 1/12 | 1200 | | | | | | | 1 | | 1 | S | X | X | | | | | | |
| 2) 4644 | SG-15 5'-6' (SB) | 1/12 | 1230 | | | | | | | 1 | | 1 | S | X | X | | | | | | X |
| 3) 4645 | SG-17 5'-6' (SB) | 1/13 | 1520 | | | | | | | 1 | | 1 | S | X | X | | | | | | X |
| 4) 4646 | SB-19 4'-5' | 1/14 | 1300 | | | | | | | 1 | | 1 | S | X | X | | | | | | X |
| 5) 4647 | SB-19 6'-7' | 1/14 | 1306 | | | | | | | 1 | | 1 | S | X | X | | | | | | |
| 6) 4648 | SB-19 19'-20' | 1/14 | 1315 | | | | | | | 1 | | 1 | S | X | X | | | | | | |
| 7) 4649 | SB-20 4'-5' | 1/12 | 1420 | | | | | | | 1 | | 1 | S | X | X | | | | | | X |
| 8) 4650 | SB-20 8'-9' | 1/12 | 1430 | | | | | | | 1 | | 1 | S | X | X | | | | | | |
| 9) 4651 | SB-20 18'-19' | 1/12 | 1450 | | | | | | | 1 | | 1 | S | X | X | | | | | | X |
| 10) 4652 | SB-22 4'-5' | 1/12 | 1400 | | | | | | | 1 | | 1 | S | X | X | | | | | | |

**COMPANY/MAILING ADDRESS:**
4080 West 11 mile Rd
Berkley MI
48072
ATTN: Christie Santiago
PHONE: 248 3369988
FAX OR EMAIL: Santiago@PMENU.com

Samples received within hold time? yes ☒ no ☐
Temperature of samples °C: 4
pHs verified in login? yes ☐ no ☒
Headspace/bubbles in VOA's? yes ☐ no ☐ n/a ☒
Sample containers and COC match? yes ☒ no ☐

**BILLING ADDRESS (IF REQUIRED):**
AP@PMENU.com

14 pm

**Drinking $H_2O$:**
Fax to LCHD? yes ☐ no ☐
Chlorinated Water Supply? yes ☐ no ☐
AMT.: _____

MCL Failure: yes ☐ no ☐
Client Notified (date/time/initials): _____

**Special Instructions:**

***Please fill out the Chain of Custody completely and review. Incorrect or incomplete information will result in a "hold" on all analyses.***

| Trans. # | RELINQUISHED BY: | RECEIVED BY: | DATE: | TIME: | Trans. # | RELINQUISHED BY: | RECEIVED BY: | DATE: | TIME: |
|---|---|---|---|---|---|---|---|---|---|
| 1 | [signature] | PM Storage | 1/15/16 | 2000 | 3 | [signature] | [signature] | 1-18-16 | 4:50pm |
| 2 | PM storage | [signature] | 1/18/16 | 1200 | 4 | | | | |

# Brighton Analytical, L.L.C.™

Email: bai-brighton@sbcglobal.net
2105 Pless Drive
Brighton, MI 48114
Phone: 810-229-7575
Fax: 810-229-8650

BA PROJECT #: 37380

PROJECT NAME: Beacon And Bridge #8

PROJECT #: 01-4982-0-006

PO #: (PLEASE NOTE IF DIFFERENT BILLING ADDRESS)

Sample collected by: SS/CW/DS

ABBREVIATIONS FOR MATRIX
S = Solid
L = Liquid
DW = Drinking $H_2O$
O = Oil
P = Wipe
A = Air (Tedlar Bag)
F = Filter
T = Tube
M = Misc.

REQUESTED TURNAROUND: (circle one)
Rush: 1-3 business days (verify with lab & specify date needed)
1 Day = 2.5X Cost 2 Day = 2X Cost 3 Day = 1.5X Cost
Standard: 5 business days

If RUSH, approved by: _____

Analysis Requested/Method

| Brighton ID # | Sample Description | Sample Coll. Date 2016 | Time | VOA'S (PRES) Y N N/A | HDPE UNPRESERVED | HDPE $HNO_3$ | HDPE $H_2SO_4$ | HDPE NaOH | AMBER PRESERVED? | GLASS, NO PRESERVATIVE | STERILIZED BACTERIA | MEOH Preserved? Y N | Sample Matrix | Metals/Lead/Cu/Zn/Cd | GRO | | | | | | | HOLD |
|---|---|---|---|---|---|---|---|---|---|---|---|---|---|---|---|---|---|---|---|---|---|---|
| CC 4653 | SB-21 2'-3' | 1/14 | 1515 | | | | | | | 1 | | 1 | S | X | X | | | | | | | X |
| 2) 4654 | SB-21 7'-8' | 1/14 | 1518 | | | | | | | 1 | | 1 | S | X | X | | | | | | | |
| 3) 4655 | SB-21 19'-20' | 1/14 | 1523 | | | | | | | 1 | | 1 | S | X | X | | | | | | | X |
| 4) 4656 | A-2 | 1/14 | / | | | | | | | 1 | | 1 | S | X | X | | | | | | | |
| 5) 4657 | A-1 | 1/11 | 0800 | | | | | | | | | 1 | AQ | X | | | | | | | | |
| 6) | | | | | | | | | | | | | | | | | | | | | | |
| 7) | | | | | | | | | | | | | | | | | | | | | | |
| 8) | | | | | | | | | | | | | | | | | | | | | | |
| 9) | | | | | | | | | | | | | | | | | | | | | | |
| 10) | | | | | | | | | | | | | | | | | | | | | | |

Container Type & Quantity

Special Instructions:

PAGE 2 OF 2

COMPANY/MAILING ADDRESS:
4080 West 11 mile Rd
Berkley MI
48072

ATTN: C. Marie Santiago
PHONE: 248 336 9988
FAX OR EMAIL: Santiago@PMENV.com

Samples received within hold time? yes ☐ no ☐
Temperature of samples °C:
pHs verified in login? yes ☐ no ☐
Headspace/bubbles in VOA's? yes ☐ no ☐ n/a ☐
Sample containers and COC match? yes ☐ no ☐

BILLING ADDRESS (IF REQUIRED):
AP@PMENV.com

Drinking $H_2O$:
Fax to LCHD? yes ☐ no ☐
Chlorinated Water Supply? yes ☐ no ☐
AMT.: _____

MCL Failure: yes ☐ no ☐
Client Notified (date/time/initials): _____

*Please fill out the Chain of Custody completely and review. Incorrect or incomplete information will result in a "hold" on all analyses.*

| Trans. # | RELINQUISHED BY: | RECEIVED BY: | DATE: | TIME: | Trans. # | RELINQUISHED BY: | RECEIVED BY: | DATE: | TIME: |
|---|---|---|---|---|---|---|---|---|---|
| 1 | [signature] | Tim Stanaugh | 1/15/16 | 2000 | 3 | [signature] | [signature] | 1-18-16 | 4:50 p |
| 2 | PM Stanaugh | [signature] | 1/18/16 | 1200 | 4 | | | | |

Brighton Analytical L.L.C.

**Brighton Analytical, L.L.C.**
**2105 Pless Drive**
**Brighton, Michigan 48116**
**™ Phone: (810) 229-7575 FAX: (810) 229-8650**
e-mail: bai-brighton@sbcglobal.net

Sample Date: 1/12/2016
Submit Date: 1/18/2016
Report Date: 1/22/2016

To: PM Environmental, Inc.
4080 W. 11 Mile Rd.
Berkley, MI 48072

BA Report Number: **37380**
BA Sample ID: **CC04643**

Project Name: **Beacon and Bridge #8**
Project Number: **01-4982-0-006**
Sample ID: **SG-14 6'-7' (SB)**

| Parameters | Results | Units | DL | Method Reference | Analyst | Analysis Date |
|---|---|---|---|---|---|---|
| **GRO Analysis** | | | | | | |
| GRO (Methanol Preserved) | **<4000** | ug/Kg | 4000 | SW846 8015 | BY | 1/22/2016 |
| **Volatile Analysis(Methanol Preserved)** | | | | | | |
| Benzene | **<50** | ug/Kg | 50 | SW846 8260C | RG | 1/19/2016 |
| 1,2-Dibromoethane(Ethylene Dibromide) | **<20** | ug/Kg | 20 | SW846 8260C | RG | 1/19/2016 |
| 1,2-Dichloroethane | **<50** | ug/Kg | 50 | SW846 8260C | RG | 1/19/2016 |
| Ethanol (Ethyl alcohol) | **<2500** | ug/Kg | 2500 | SW846 8260C | RG | 1/19/2016 |
| Ethylbenzene | **<50** | ug/Kg | 50 | SW846 8260C | RG | 1/19/2016 |
| Isopropylbenzene | **<50** | ug/Kg | 50 | SW846 8260C | RG | 1/19/2016 |
| 2-Methylnaphthalene | **<250** | ug/Kg | 250 | SW846 8260C | RG | 1/19/2016 |
| MTBE | **<50** | ug/Kg | 50 | SW846 8260C | RG | 1/19/2016 |
| Naphthalene | **<250** | ug/Kg | 250 | SW846 8260C | RG | 1/19/2016 |
| n-Propylbenzene | **<50** | ug/Kg | 50 | SW846 8260C | RG | 1/19/2016 |
| Toluene | **<50** | ug/Kg | 50 | SW846 8260C | RG | 1/19/2016 |
| 1,2,3-Trimethylbenzene | **<50** | ug/Kg | 50 | SW846 8260C | RG | 1/19/2016 |
| 1,2,4-Trimethylbenzene | **<50** | ug/Kg | 50 | SW846 8260C | RG | 1/19/2016 |
| 1,3,5-Trimethylbenzene | **<50** | ug/Kg | 50 | SW846 8260C | RG | 1/19/2016 |
| Xylenes(total) | **<150** | ug/Kg | 150 | SW846 8260C | RG | 1/19/2016 |
| EPA Method 5035 Methanol Preserv | **Extracted** | | | EPA 5035 | PME | 1/12/2016 |
| %Solid | **89** | % | | ASTM D2216 | LS | 1/19/2016 |

All soil results based on dry weight.

DL=Reported detection limit for analytical method requested. Some compounds require special analytical methods to achieve MDNR designated target detection limits (TDL).

Released by: [signature]

Date: 1/22/16

**Brighton Analytical, L.L.C.**
**2105 Pless Drive**
**Brighton, Michigan 48116**
**Phone: (810) 229-7575 FAX: (810) 229-8650**
e-mail: bai-brighton@sbcglobal.net

Sample Date: 1/14/2016
Submit Date: 1/18/2016
Report Date: 1/22/2016

To: PM Environmental, Inc.
4080 W. 11 Mile Rd.
Berkley, MI 48072

BA Report Number: **37380**
BA Sample ID: **CC04647**

Project Name: **Beacon and Bridge #8**
Project Number: **01-4982-0-006**
Sample ID: **SB-19 6'-7'**

| Parameters | Results | Units | DL | Method Reference | Analyst | Analysis Date |
|---|---|---|---|---|---|---|
| **GRO Analysis** | | | | | | |
| GRO (Methanol Preserved) | **<4000** | ug/Kg | 4000 | SW846 8015 | BY | 1/22/2016 |
| **Volatile Analysis(Methanol Preserved)** | | | | | | |
| Benzene | **<50** | ug/Kg | 50 | SW846 8260C | RG | 1/19/2016 |
| 1,2-Dibromoethane(Ethylene Dibromide) | **<20** | ug/Kg | 20 | SW846 8260C | RG | 1/19/2016 |
| 1,2-Dichloroethane | **<50** | ug/Kg | 50 | SW846 8260C | RG | 1/19/2016 |
| Ethanol (Ethyl alcohol) | **<2500** | ug/Kg | 2500 | SW846 8260C | RG | 1/19/2016 |
| Ethylbenzene | **<50** | ug/Kg | 50 | SW846 8260C | RG | 1/19/2016 |
| Isopropylbenzene | **<50** | ug/Kg | 50 | SW846 8260C | RG | 1/19/2016 |
| 2-Methylnaphthalene | **<250** | ug/Kg | 250 | SW846 8260C | RG | 1/19/2016 |
| MTBE | **<50** | ug/Kg | 50 | SW846 8260C | RG | 1/19/2016 |
| Naphthalene | **<250** | ug/Kg | 250 | SW846 8260C | RG | 1/19/2016 |
| n-Propylbenzene | **<50** | ug/Kg | 50 | SW846 8260C | RG | 1/19/2016 |
| Toluene | **<50** | ug/Kg | 50 | SW846 8260C | RG | 1/19/2016 |
| 1,2,3-Trimethylbenzene | **<50** | ug/Kg | 50 | SW846 8260C | RG | 1/19/2016 |
| 1,2,4-Trimethylbenzene | **<50** | ug/Kg | 50 | SW846 8260C | RG | 1/19/2016 |
| 1,3,5-Trimethylbenzene | **<50** | ug/Kg | 50 | SW846 8260C | RG | 1/19/2016 |
| Xylenes(total) | **<150** | ug/Kg | 150 | SW846 8260C | RG | 1/19/2016 |
| EPA Method 5035 Methanol Preserv | **Extracted** | | | EPA 5035 | PME | 1/14/2016 |
| %Solid | **88** | % | | ASTM D2216 | LS | 1/19/2016 |

All soil results based on dry weight.

DL=Reported detection limit for analytical method requested. Some compounds require special analytical methods to achieve MDNR designated target detection limits (TDL).

Released by:

Date: 1/22/16

**Brighton Analytical, L.L.C.**
**2105 Pless Drive**
**Brighton, Michigan 48116**
**Phone: (810) 229-7575 FAX: (810) 229-8650**
e-mail: bai-brighton@sbcglobal.net

Sample Date: 1/14/2016
Submit Date: 1/18/2016
Report Date: 1/22/2016

To: PM Environmental, Inc.
4080 W. 11 Mile Rd.
Berkley, MI 48072

BA Report Number: **37380**
BA Sample ID: **CC04648**

Project Name: **Beacon and Bridge #8**
Project Number: **01-4982-0-006**
Sample ID: **SB-19 19'-20'**

| Parameters | Results | Units | DL | Method Reference | Analyst | Analysis Date |
|---|---|---|---|---|---|---|
| **GRO Analysis** | | | | | | |
| GRO (Methanol Preserved) | <4000 | ug/Kg | 4000 | SW846 8015 | BY | 1/22/2016 |
| **Volatile Analysis(Methanol Preserved)** | | | | | | |
| Benzene | <50 | ug/Kg | 50 | SW846 8260C | RG | 1/19/2016 |
| 1,2-Dibromoethane(Ethylene Dibromide) | <20 | ug/Kg | 20 | SW846 8260C | RG | 1/19/2016 |
| 1,2-Dichloroethane | <50 | ug/Kg | 50 | SW846 8260C | RG | 1/19/2016 |
| Ethanol (Ethyl alcohol) | <2500 | ug/Kg | 2500 | SW846 8260C | RG | 1/19/2016 |
| Ethylbenzene | <50 | ug/Kg | 50 | SW846 8260C | RG | 1/19/2016 |
| Isopropylbenzene | <50 | ug/Kg | 50 | SW846 8260C | RG | 1/19/2016 |
| 2-Methylnaphthalene | <250 | ug/Kg | 250 | SW846 8260C | RG | 1/19/2016 |
| MTBE | <50 | ug/Kg | 50 | SW846 8260C | RG | 1/19/2016 |
| Naphthalene | <250 | ug/Kg | 250 | SW846 8260C | RG | 1/19/2016 |
| n-Propylbenzene | <50 | ug/Kg | 50 | SW846 8260C | RG | 1/19/2016 |
| Toluene | <50 | ug/Kg | 50 | SW846 8260C | RG | 1/19/2016 |
| 1,2,3-Trimethylbenzene | <50 | ug/Kg | 50 | SW846 8260C | RG | 1/19/2016 |
| 1,2,4-Trimethylbenzene | <50 | ug/Kg | 50 | SW846 8260C | RG | 1/19/2016 |
| 1,3,5-Trimethylbenzene | <50 | ug/Kg | 50 | SW846 8260C | RG | 1/19/2016 |
| Xylenes(total) | <150 | ug/Kg | 150 | SW846 8260C | RG | 1/19/2016 |
| EPA Method 5035 Methanol Preserv | **Extracted** | | | EPA 5035 | PME | 1/14/2016 |
| %Solid | 90 | % | | ASTM D2216 | LS | 1/19/2016 |

All soil results based on dry weight.

DL=Reported detection limit for analytical method requested. Some compounds require special analytical methods to achieve MDNR designated target detection limits (TDL).

Released by:

Date: 1/22/16

**Brighton Analytical, L.L.C.**
**2105 Pless Drive**
**Brighton, Michigan 48116**
**Phone: (810) 229-7575 FAX: (810) 229-8650**
e-mail: bai-brighton@sbcglobal.net

Sample Date: 1/12/2016
Submit Date: 1/18/2016
Report Date: 1/22/2016

To: PM Environmental, Inc.
4080 W. 11 Mile Rd.
Berkley, MI 48072

BA Report Number: **37380**
BA Sample ID: **CC04650**

Project Name: **Beacon and Bridge #8**
Project Number: **01-4982-0-006**
Sample ID: **SB-20 8'-9'**

| Parameters | Results | Units | DL | Method Reference | Analyst | Analysis Date |
|---|---|---|---|---|---|---|
| **GRO Analysis** | | | | | | |
| GRO (Methanol Preserved) | **<4000** | ug/Kg | 4000 | SW846 8015 | BY | 1/22/2016 |
| **Volatile Analysis(Methanol Preserved)** | | | | | | |
| Benzene | **<50** | ug/Kg | 50 | SW846 8260C | RG | 1/19/2016 |
| 1,2-Dibromoethane(Ethylene Dibromide) | **<20** | ug/Kg | 20 | SW846 8260C | RG | 1/19/2016 |
| 1,2-Dichloroethane | **<50** | ug/Kg | 50 | SW846 8260C | RG | 1/19/2016 |
| Ethanol (Ethyl alcohol) | **<2500** | ug/Kg | 2500 | SW846 8260C | RG | 1/19/2016 |
| Ethylbenzene | **<50** | ug/Kg | 50 | SW846 8260C | RG | 1/19/2016 |
| Isopropylbenzene | **<50** | ug/Kg | 50 | SW846 8260C | RG | 1/19/2016 |
| 2-Methylnaphthalene | **<250** | ug/Kg | 250 | SW846 8260C | RG | 1/19/2016 |
| MTBE | **<50** | ug/Kg | 50 | SW846 8260C | RG | 1/19/2016 |
| Naphthalene | **<250** | ug/Kg | 250 | SW846 8260C | RG | 1/19/2016 |
| n-Propylbenzene | **<50** | ug/Kg | 50 | SW846 8260C | RG | 1/19/2016 |
| Toluene | **<50** | ug/Kg | 50 | SW846 8260C | RG | 1/19/2016 |
| 1,2,3-Trimethylbenzene | **<50** | ug/Kg | 50 | SW846 8260C | RG | 1/19/2016 |
| 1,2,4-Trimethylbenzene | **<50** | ug/Kg | 50 | SW846 8260C | RG | 1/19/2016 |
| 1,3,5-Trimethylbenzene | **<50** | ug/Kg | 50 | SW846 8260C | RG | 1/19/2016 |
| Xylenes(total) | **<150** | ug/Kg | 150 | SW846 8260C | RG | 1/19/2016 |
| EPA Method 5035 Methanol Preserv | **Extracted** | | | EPA 5035 | PME | 1/12/2016 |
| %Solid | **94** | % | | ASTM D2216 | LS | 1/19/2016 |

All soil results based on dry weight.

DL=Reported detection limit for analytical method requested. Some compounds require special analytical methods to achieve MDNR designated target detection limits (TDL).

Released by:

Date: 1/22/16

**Brighton Analytical, L.L.C.**
**2105 Pless Drive**
**Brighton, Michigan 48116**
**Phone: (810) 229-7575 FAX: (810) 229-8650**
e-mail: bai-brighton@sbcglobal.net

Sample Date: 1/12/2016
Submit Date: 1/18/2016
Report Date: 1/22/2016

To: PM Environmental, Inc.
4080 W. 11 Mile Rd.
Berkley, MI 48072

BA Report Number: **37380**
BA Sample ID: **CC04652**

Project Name: **Beacon and Bridge #8**
Project Number: **01-4982-0-006**
Sample ID: **SB-22 4'-5'**

| Parameters | Results | Units | DL | Method Reference | Analyst | Analysis Date |
|---|---|---|---|---|---|---|
| **GRO Analysis** | | | | | | |
| GRO (Methanol Preserved) | **<4000** | ug/Kg | 4000 | SW846 8015 | BY | 1/22/2016 |
| **Volatile Analysis(Methanol Preserved)** | | | | | | |
| Benzene | **<50** | ug/Kg | 50 | SW846 8260C | RG | 1/19/2016 |
| 1,2-Dibromoethane(Ethylene Dibromide) | **<20** | ug/Kg | 20 | SW846 8260C | RG | 1/19/2016 |
| 1,2-Dichloroethane | **<50** | ug/Kg | 50 | SW846 8260C | RG | 1/19/2016 |
| Ethanol (Ethyl alcohol) | **<2500** | ug/Kg | 2500 | SW846 8260C | RG | 1/19/2016 |
| Ethylbenzene | **<50** | ug/Kg | 50 | SW846 8260C | RG | 1/19/2016 |
| Isopropylbenzene | **<50** | ug/Kg | 50 | SW846 8260C | RG | 1/19/2016 |
| 2-Methylnaphthalene | **<250** | ug/Kg | 250 | SW846 8260C | RG | 1/19/2016 |
| MTBE | **<50** | ug/Kg | 50 | SW846 8260C | RG | 1/19/2016 |
| Naphthalene | **<250** | ug/Kg | 250 | SW846 8260C | RG | 1/19/2016 |
| n-Propylbenzene | **<50** | ug/Kg | 50 | SW846 8260C | RG | 1/19/2016 |
| Toluene | **<50** | ug/Kg | 50 | SW846 8260C | RG | 1/19/2016 |
| 1,2,3-Trimethylbenzene | **<50** | ug/Kg | 50 | SW846 8260C | RG | 1/19/2016 |
| 1,2,4-Trimethylbenzene | **<50** | ug/Kg | 50 | SW846 8260C | RG | 1/19/2016 |
| 1,3,5-Trimethylbenzene | **<50** | ug/Kg | 50 | SW846 8260C | RG | 1/19/2016 |
| Xylenes(total) | **<150** | ug/Kg | 150 | SW846 8260C | RG | 1/19/2016 |
| EPA Method 5035 Methanol Preserv | **Extracted** | | | EPA 5035 | PME | 1/12/2016 |
| %Solid | **93** | % | | ASTM D2216 | LS | 1/19/2016 |

All soil results based on dry weight.

DL=Reported detection limit for analytical method requested. Some compounds require special analytical methods to achieve MDNR designated target detection limits (TDL).

Released by:

Date: 1/22/16

**Brighton Analytical, L.L.C.**
**2105 Pless Drive**
**Brighton, Michigan 48116**
**Phone: (810) 229-7575 FAX: (810) 229-8650**
e-mail: bai-brighton@sbcglobal.net

Sample Date: 1/14/2016
Submit Date: 1/18/2016
Report Date: 1/22/2016

To: PM Environmental, Inc.
4080 W. 11 Mile Rd.
Berkley, MI 48072

BA Report Number: **37380**
BA Sample ID: **CC04654**

Project Name: **Beacon and Bridge #8**
Project Number: **01-4982-0-006**
Sample ID: **SB-21 7'-8'**

| Parameters | Results | Units | DL | Method Reference | Analyst | Analysis Date |
|---|---|---|---|---|---|---|
| **GRO Analysis** | | | | | | |
| GRO (Methanol Preserved) | <4000 | ug/Kg | 4000 | SW846 8015 | BY | 1/22/2016 |
| **Volatile Analysis(Methanol Preserved)** | | | | | | |
| Benzene | <50 | ug/Kg | 50 | SW846 8260C | RG | 1/19/2016 |
| 1,2-Dibromoethane(Ethylene Dibromide) | <20 | ug/Kg | 20 | SW846 8260C | RG | 1/19/2016 |
| 1,2-Dichloroethane | <50 | ug/Kg | 50 | SW846 8260C | RG | 1/19/2016 |
| Ethanol (Ethyl alcohol) | <2500 | ug/Kg | 2500 | SW846 8260C | RG | 1/19/2016 |
| Ethylbenzene | <50 | ug/Kg | 50 | SW846 8260C | RG | 1/19/2016 |
| Isopropylbenzene | <50 | ug/Kg | 50 | SW846 8260C | RG | 1/19/2016 |
| 2-Methylnaphthalene | <250 | ug/Kg | 250 | SW846 8260C | RG | 1/19/2016 |
| MTBE | <50 | ug/Kg | 50 | SW846 8260C | RG | 1/19/2016 |
| Naphthalene | <250 | ug/Kg | 250 | SW846 8260C | RG | 1/19/2016 |
| n-Propylbenzene | <50 | ug/Kg | 50 | SW846 8260C | RG | 1/19/2016 |
| Toluene | <50 | ug/Kg | 50 | SW846 8260C | RG | 1/19/2016 |
| 1,2,3-Trimethylbenzene | <50 | ug/Kg | 50 | SW846 8260C | RG | 1/19/2016 |
| 1,2,4-Trimethylbenzene | <50 | ug/Kg | 50 | SW846 8260C | RG | 1/19/2016 |
| 1,3,5-Trimethylbenzene | <50 | ug/Kg | 50 | SW846 8260C | RG | 1/19/2016 |
| Xylenes(total) | <150 | ug/Kg | 150 | SW846 8260C | RG | 1/19/2016 |
| EPA Method 5035 Methanol Preserv | **Extracted** | | | EPA 5035 | PME | 1/14/2016 |
| %Solid | **90** | % | | ASTM D2216 | LS | 1/19/2016 |

All soil results based on dry weight.

DL=Reported detection limit for analytical method requested. Some compounds require special analytical methods to achieve MDNR designated target detection limits (TDL).

Released by: UHood

Date: 1/22/16

**Brighton Analytical, L.L.C.**
**2105 Pless Drive**
**Brighton, Michigan 48116**
**Phone: (810) 229-7575 FAX: (810) 229-8650**
e-mail: bai-brighton@sbcglobal.net

Sample Date: 1/14/2016
Submit Date: 1/18/2016
Report Date: 1/22/2016

To: PM Environmental, Inc.
4080 W. 11 Mile Rd.
Berkley, MI 48072

BA Report Number: **37380**
BA Sample ID: **CC04656**

Project Name: **Beacon and Bridge #8**
Project Number: **01-4982-0-006**
Sample ID: **A-2**

| Parameters | Results | Units | DL | Method Reference | Analyst | Analysis Date |
|---|---|---|---|---|---|---|
| **GRO Analysis** | | | | | | |
| GRO (Methanol Preserved) | **<4000** | ug/Kg | 4000 | SW846 8015 | BY | 1/22/2016 |
| **Volatile Analysis(Methanol Preserved)** | | | | | | |
| Benzene | **<50** | ug/Kg | 50 | SW846 8260C | RG | 1/19/2016 |
| 1,2-Dibromoethane(Ethylene Dibromide) | **<20** | ug/Kg | 20 | SW846 8260C | RG | 1/19/2016 |
| 1,2-Dichloroethane | **<50** | ug/Kg | 50 | SW846 8260C | RG | 1/19/2016 |
| Ethanol (Ethyl alcohol) | **<2500** | ug/Kg | 2500 | SW846 8260C | RG | 1/19/2016 |
| Ethylbenzene | **<50** | ug/Kg | 50 | SW846 8260C | RG | 1/19/2016 |
| Isopropylbenzene | **<50** | ug/Kg | 50 | SW846 8260C | RG | 1/19/2016 |
| 2-Methylnaphthalene | **<250** | ug/Kg | 250 | SW846 8260C | RG | 1/19/2016 |
| MTBE | **<50** | ug/Kg | 50 | SW846 8260C | RG | 1/19/2016 |
| Naphthalene | **<250** | ug/Kg | 250 | SW846 8260C | RG | 1/19/2016 |
| n-Propylbenzene | **<50** | ug/Kg | 50 | SW846 8260C | RG | 1/19/2016 |
| Toluene | **<50** | ug/Kg | 50 | SW846 8260C | RG | 1/19/2016 |
| 1,2,3-Trimethylbenzene | **<50** | ug/Kg | 50 | SW846 8260C | RG | 1/19/2016 |
| 1,2,4-Trimethylbenzene | **<50** | ug/Kg | 50 | SW846 8260C | RG | 1/19/2016 |
| 1,3,5-Trimethylbenzene | **<50** | ug/Kg | 50 | SW846 8260C | RG | 1/19/2016 |
| Xylenes(total) | **<150** | ug/Kg | 150 | SW846 8260C | RG | 1/19/2016 |
| EPA Method 5035 Methanol Preserv | **Extracted** | | | EPA 5035 | PME | 1/14/2016 |
| %Solid | **89** | % | | ASTM D2216 | LS | 1/19/2016 |

All soil results based on dry weight.

DL=Reported detection limit for analytical method requested. Some compounds require special analytical methods to achieve MDNR designated target detection limits (TDL).

Released by:

Date: 1/22/16

**Brighton Analytical, L.L.C.**
**2105 Pless Drive**
**Brighton, Michigan 48116**
**Phone: (810) 229-7575 FAX: (810) 229-8650**
e-mail: bai-brighton@sbcglobal.net

Sample Date: 1/11/2016
Submit Date: 1/18/2016
Report Date: 1/22/2016

To: PM Environmental, Inc.
4080 W. 11 Mile Rd.
Berkley, MI 48072

BA Report Number: **37380**
BA Sample ID: **CC04657**

Project Name: **Beacon and Bridge #8**
Project Number: **01-4982-0-006**
Sample ID: **A-1**

| Parameters | Results | Units | DL | Method Reference | Analyst | Analysis Date |
|---|---|---|---|---|---|---|
| **Volatile Analysis(Methanol Preserved)** | | | | | | |
| Benzene | **<50** | ug/Kg | 50 | SW846 8260C | RG | 1/19/2016 |
| 1,2-Dibromoethane(Ethylene Dibromide) | **<20** | ug/Kg | 20 | SW846 8260C | RG | 1/19/2016 |
| 1,2-Dichloroethane | **<50** | ug/Kg | 50 | SW846 8260C | RG | 1/19/2016 |
| Ethanol (Ethyl alcohol) | **<2500** | ug/Kg | 2500 | SW846 8260C | RG | 1/19/2016 |
| Ethylbenzene | **<50** | ug/Kg | 50 | SW846 8260C | RG | 1/19/2016 |
| Isopropylbenzene | **<50** | ug/Kg | 50 | SW846 8260C | RG | 1/19/2016 |
| 2-Methylnaphthalene | **<250** | ug/Kg | 250 | SW846 8260C | RG | 1/19/2016 |
| MTBE | **<50** | ug/Kg | 50 | SW846 8260C | RG | 1/19/2016 |
| Naphthalene | **<250** | ug/Kg | 250 | SW846 8260C | RG | 1/19/2016 |
| n-Propylbenzene | **<50** | ug/Kg | 50 | SW846 8260C | RG | 1/19/2016 |
| Toluene | **<50** | ug/Kg | 50 | SW846 8260C | RG | 1/19/2016 |
| 1,2,3-Trimethylbenzene | **<50** | ug/Kg | 50 | SW846 8260C | RG | 1/19/2016 |
| 1,2,4-Trimethylbenzene | **<50** | ug/Kg | 50 | SW846 8260C | RG | 1/19/2016 |
| 1,3,5-Trimethylbenzene | **<50** | ug/Kg | 50 | SW846 8260C | RG | 1/19/2016 |
| Xylenes(total) | **<150** | ug/Kg | 150 | SW846 8260C | RG | 1/19/2016 |

DL=Reported detection limit for analytical method requested. Some compounds require special analytical methods to achieve MDNR designated target detection limits (TDL).

Released by:

Date: 1/22/16

Brighton Analytical L.L.C.™
2105 Pless Drive · Brighton, Michigan 48114 · Phone (810) 229-7575 · Fax (810) 229-8650 · E-mail bai-brighton@sbcglobal.net

January 28, 2016

PM Environmental, Inc.
4080 W. 11 Mile Rd.
Berkley, MI 48072

Subject: Beacon & Bridge #8
01-4982-0-006

Dear Ms. Santiago :

Thank you for making Brighton Analytical, L.L.C. your laboratory of choice. Attached are the results for the samples submitted on 01/20/2016 for the above mentioned project. NELAP/TNI Accredited Analysis and MDEQ Drinking Water Certified Analysis will be identified in their respective reporting formats. Hard copies can be supplied at your request for a fee of $20.00 per copy.

The invoice for this project will be emailed separately. If you have any questions concerning the data or invoice, please don't hesitate to contact our office. We welcome your comments and suggestions to improve our quality systems. Please reference Brighton Analytical, L.L.C. Project ID 37400 when calling or emailing. We thank you for this opportunity to partner with you on this project and hope to work with you again in the future.

Sincerely,
Brighton Analytical, L.L.C.

DEQ
NELAP ACCREDITED TNI LABORATORY
Certified WBENC Women's Business Enterprise

**Brighton Analytical, L.L.C.™**

Email: bai-brighton@sbcglobal.net
2105 Pless Drive
Brighton, MI 48114
Phone: 810-229-7575
Fax: 810-229-8650

BA PROJECT #: 37400

PAGE 1 OF 1

PROJECT NAME: Beacon & Bridge #8

PROJECT #: 01-4982-0-006

PO #: (PLEASE NOTE IF DIFFERENT BILLING ADDRESS)

Sample collected by: CW/DS

**ABBREVIATIONS FOR MATRIX**
S = Solid
L = Liquid
DW = Drinking $H_2O$
O = Oil
P = Wipe
A = Air (Tedlar Bag)
F = Filter
T = Tube
M = Misc.

**REQUESTED TURNAROUND:** (circle one)
Rush: 1-3 business days (verify with lab & specify date needed)
1 Day = 2.5X Cost 2 Day = 2X Cost 3 Day = 1.5X Cost
Standard: 5 business days

If RUSH, approved by: _____

**Container Type & Quantity**

| Brighton ID # | Sample Description | Sample Coll. Date (2016) | Time | VOA'S (PRES) Y N N/A | HDPE UNPRESERVED | HDPE $HNO_3$ | HDPE $H_2SO_4$ | HDPE NaOH | AMBER PRESERVED? SOLIDS | GLASS, NO PRESERVATIVE | STERILIZED BACTERIA | MEOH Preserved Y N | Sample Matrix | TO-15 | | | BTL # | | | | |
|---|---|---|---|---|---|---|---|---|---|---|---|---|---|---|---|---|---|---|---|---|---|
| CC04774 | SG-13 | 1/15 | 1550 | | | | | | 1 | | | | 1 | X | | | 1 | 2 | 6 | 3 | 4 |
| 2) | SG-18* | 1/15 | 1535 | | | | | | 1 | | | | 1 | X | | | | 1 | 4 | 5 | 1 |
| 3) 4775 | SG-19 | 1/15 | 1525 | | | | | | 1 | | | | 1 | X | | | | 1 | 4 | 4 | 8 |
| 4) | | | | | | | | | | | | | | | | | | | | | |
| 5) | | | | | | | | | | | | | | | | | | | | | |
| 6) | | | | | | | | | | | | | | | | | | | | | |
| 7) | | | | | | | | | | | | | | | | | | | | | |
| 8) | | | | | | | | | | | | | | | | | | | | | |
| 9) | | | | | | | | | | | | | | | | | | | | | |
| 10) | | | | | | | | | | | | | | | | | | | | | |

**Analysis Requested/Method**

**COMPANY/MAILING ADDRESS:**
4080 W ELEVEN Mile
Berkley MI
48072

ATTN: Christie Santiago

PHONE: 248 336 9488

FAX OR EMAIL: Santiago@prenu.com

Samples received within hold time? yes ☒ no ☐

Temperature of samples °C:

pHs verified in login? yes ☐ no ☒

Headspace/bubbles in VOA's? yes ☐ no ☐ n/a ☒

Sample containers and COC match? yes ☒ no ☐

**BILLING ADDRESS (IF REQUIRED):**
APA@prenu.com

*SAMPLE RECEIVED BROKEN

**Drinking $H_2O$:**
Fax to LCHD? yes ☐ no ☐
Chlorinated Water Supply? yes ☐ no ☐
AMT.: _____

MCL Failure: yes ☐ no ☐
Client Notified (date/time/initials): _____

**Special Instructions:**

*Please fill out the Chain of Custody completely and review. Incorrect or incomplete information will result in a "hold" on all analyses.*

| Trans. # | RELINQUISHED BY: | RECEIVED BY: | DATE: | TIME: | Trans. # | RELINQUISHED BY: | RECEIVED BY: | DATE: | TIME: |
|---|---|---|---|---|---|---|---|---|---|
| 1 | [signature] | Pm Storage | 1/11/15 | | 3 | [signature] | [signature] | 1/20/16 | 1200 |
| 2 | Pm Storage | [signature] | 1/19/16 | 1030 | 4 | | | | |

Brighton Analytical L.L.C.

COC ADDENDA

DATE 1-11-16

COMPANY PU

CONTAINER AND SERIAL # 1 L BOTTLE VAC # 12634 W Sum Sample

CONTAINER CLEANED 10-12-15 SIGNED [illegible]

VACUUM OUT 28" Hg 1-11-12 SIGNED [illegible]

SAMPLE DATE/REPRESENTATIVE 1/15/16 DS/CW

PROJECT NAME/NUMBER BOB #8 / 01-4982-0-006

| SAMPLE ID | TIME START | TIME END | VACUUM START | VACUUM END | VOLUME | FLOW RATE |
|---|---|---|---|---|---|---|
| S6-13 | 15:45 | 15:50 | 23 inHg | 3 inHg | 1L | 200 ml/min. |

Lab ID CC04774 Lab Project # 37400

Date Analyzed_____ Temp/Pressure_____ Tube ID_____

Volume Calcualtion_____

Tank Dilution_____

Tube Dilution_____

Brighton Analytical L.L.C.

COC ADDENDA

DATE 1-11-16

COMPANY PW

CONTAINER AND SERIAL # 1 L BOTTLE VAC # 1442B w 5 min sampler

CONTAINER CLEANED 10-12-15 SIGNED [illegible]

VACUUM OUT 28" Hg 1-11-16 SIGNED [illegible]

SAMPLE DATE/REPRESENTATIVE 1/15/16 / DS/CW

PROJECT NAME/NUMBER B&B #8 / 01-4982-0-006

| SAMPLE ID | TIME START | TIME END | VACUUM START | VACUUM END | VOLUME | FLOW RATE |
|---|---|---|---|---|---|---|
| SG-19 | 15:20 | 15:25 | 20 in Hg | 3 in Hg | 1 L | 200 mL/min |

Lab ID CC0475 Lab Project # 37400

Date Analyzed _____ Temp/Pressure _____ Tube ID _____

Volume Calcualtion _____

Tank Dilution _____

Tube Dilution _____

**Brighton Analytical LLC**
2105 Pless Drive
Brighton, Michigan 48114
Phone: (810)229-7575 (810)229-8650
e-mail:bai-brighton@sbcglobal.net
MDNRE Certified #9404
NELAC Accredited #176507

Sample Date 1/15/2016
Submit Date 1/20/2016
Report Date: 1/28/2016

PM Environmental, Inc.
4080 W. 11 Mile Rd.
Berkley, MI 48072

BA Project # **37400**
BA Sample ID **CC04774**
Method **TO15**

Project Name: **Beacon & Bridge #8**
Project Number: **01-4982-0-006**
Sample ID: **SG-13**

| Analyte Name | ppbv Result | RL | CAS Number | ug/m3 Result | Date Analyzed | Analyst |
|---|---|---|---|---|---|---|
| **Volatile TO15 Analysis** | | | | | | |
| Acetone | 17 | 0.80 | 67-64-1 | 40 | 1/25/2016 | CW |
| Benzene | <0.80 | 0.80 | 71-43-2 | <2.6 | 1/25/2016 | CW |
| Benzyl Chloride | <0.80 | 0.80 | 100-44-7 | <4.1 | 1/25/2016 | CW |
| Bromodichloromethane | <0.80 | 0.80 | 75-27-4 | <5.4 | 1/25/2016 | CW |
| Bromoethene | <0.80 | 0.80 | 593-60-2 | <3.5 | 1/25/2016 | CW |
| Bromoform | <0.80 | 0.80 | 75-25-2 | <8.3 | 1/25/2016 | CW |
| Bromomethane | <0.80 | 0.80 | 74-83-9 | <3.1 | 1/25/2016 | CW |
| 1,3-Butadiene | <0.80 | 0.80 | 106-99-0 | <1.8 | 1/25/2016 | CW |
| Carbon disulfide | <0.80 | 0.80 | 75-15-0 | <2.5 | 1/25/2016 | CW |
| Carbon tetrachloride | <0.80 | 0.80 | 56-23-5 | <5.0 | 1/25/2016 | CW |
| Chlorobenzene | <0.80 | 0.80 | 108-90-7 | <3.7 | 1/25/2016 | CW |
| Chloroethane | <0.80 | 0.80 | 75-00-3 | <2.1 | 1/25/2016 | CW |
| Chloroform | <0.80 | 0.80 | 67-66-3 | <3.9 | 1/25/2016 | CW |
| Chloromethane | <0.80 | 0.80 | 74-87-3 | <1.7 | 1/25/2016 | CW |
| 3-Chloropropene | <0.80 | 0.80 | 107-05-1 | <2.5 | 1/25/2016 | CW |
| 2-Chlorotoluene | <0.80 | 0.80 | 95-49-8 | <4.1 | 1/25/2016 | CW |
| cis-1,2-Dichloroethylene | <0.80 | 0.80 | 156-59-2 | <3.2 | 1/25/2016 | CW |
| cis-1,3-Dichloropropene | <0.80 | 0.80 | 10061-01-5 | <3.6 | 1/25/2016 | CW |
| Cyclohexane | <0.80 | 0.80 | 110-82-7 | <2.8 | 1/25/2016 | CW |
| Dibromochloromethane | <0.80 | 0.80 | 124-48-1 | <6.8 | 1/25/2016 | CW |
| 1,2-Dibromoethane | <0.80 | 0.80 | 106-93-4 | <6.1 | 1/25/2016 | CW |
| 1,2-Dichlorobenzene | <0.80 | 0.80 | 95-50-1 | <4.8 | 1/25/2016 | CW |
| 1,4-Dichlorobenzene | <0.80 | 0.80 | 106-46-7 | <4.8 | 1/25/2016 | CW |
| 1,3-Dichlorobenzene | <0.80 | 0.80 | 541-73-1 | <4.8 | 1/25/2016 | CW |
| Dichlorodifluoromethane | <0.80 | 0.80 | 75-71-8 | <4.0 | 1/25/2016 | CW |
| 1,1-Dichloroethane | <0.80 | 0.80 | 75-34-3 | <3.2 | 1/25/2016 | CW |
| 1,2-Dichloroethane | <0.80 | 0.80 | 107-06-2 | <3.2 | 1/25/2016 | CW |
| 1,1-Dichloroethylene | <0.80 | 0.80 | 75-35-4 | <3.2 | 1/25/2016 | CW |

**Brighton Analytical LLC**
2105 Pless Drive
Brighton, Michigan 48114
Phone: (810)229-7575 (810)229-8650
e-mail:bai-brighton@sbcglobal.net
MDNRE Certified #9404
NELAC Accredited #176507

Sample Date 1/15/2016
Submit Date 1/20/2016
Report Date: 1/28/2016

PM Environmental, Inc.
4080 W. 11 Mile Rd.
Berkley, MI 48072

BA Project # **37400**
BA Sample ID **CC04774**
Method **TO15**

Project Name: **Beacon & Bridge #8**
Project Number: **01-4982-0-006**
Sample ID: **SG-13**

| Analyte Name | ppbv Result | RL | CAS Number | ug/m3 Result | Date Analyzed | Analyst |
|---|---|---|---|---|---|---|
| **Volatile TO15 Analysis** | | | | | | |
| 1,2-Dichloropropane | <0.80 | 0.80 | 78-87-5 | <3.7 | 1/25/2016 | CW |
| Dichlorotetrafluoroethane(Freon 114) | <0.80 | 0.80 | 76-14-2 | <5.6 | 1/25/2016 | CW |
| 1,4-Dioxane | <0.80 | 0.80 | 123-91-1 | <2.9 | 1/25/2016 | CW |
| Ethanol | <2.0 | 2.0 | 64-17-5 | <3.8 | 1/25/2016 | CW |
| Ethyl Acetate | <0.80 | 0.80 | 141-78-6 | <2.9 | 1/25/2016 | CW |
| Ethylbenzene | 48 | 0.80 | 100-41-4 | 210 | 1/25/2016 | CW |
| 4-Ethyltoluene | <0.80 | 0.80 | 622-96-8 | <3.9 | 1/25/2016 | CW |
| Heptane | <0.80 | 0.80 | 142-82-5 | <3.3 | 1/25/2016 | CW |
| Hexachlorobutadiene | <0.80 | 0.80 | 87-68-3 | <8.5 | 1/25/2016 | CW |
| Hexane | 12 | 0.80 | 110-54-3 | 43 | 1/25/2016 | CW |
| 2-Hexanone | <0.80 | 0.80 | 591-78-6 | <3.3 | 1/25/2016 | CW |
| Isopropyl Alcohol | <0.80 | 0.80 | 67-63-0 | <2.0 | 1/25/2016 | CW |
| Methyl ethyl ketone | <0.80 | 0.80 | 78-93-3 | <2.4 | 1/25/2016 | CW |
| Methyl Isobutyl Ketone | <0.80 | 0.80 | 108-10-1 | <3.3 | 1/25/2016 | CW |
| Methyl Tert Butyl Ether | <0.80 | 0.80 | 1634-04-4 | <2.9 | 1/25/2016 | CW |
| Methylene chloride | <0.80 | 0.80 | 75-09-2 | <2.8 | 1/25/2016 | CW |
| Methylmethacrylate | <0.80 | 0.80 | 80-62-6 | <3.3 | 1/25/2016 | CW |
| m,p-Xylene | 230 | 0.80 | 108-38-3/106-42-3 | 1000 | 1/25/2016 | CW |
| Naphthalene | <0.80 | 0.80 | 91-20-3 | <4.2 | 1/25/2016 | CW |
| o-Xylene | 120 | 0.80 | 95-47-6 | 510 | 1/25/2016 | CW |
| Propylene | <2.0 | 2.0 | 115-07-1 | <3.4 | 1/25/2016 | CW |
| Styrene | <0.80 | 0.80 | 100-42-5 | <3.4 | 1/25/2016 | CW |
| Tertiary Butyl Alcohol | <0.80 | 0.80 | 75-65-0 | <2.4 | 1/25/2016 | CW |
| 1,1,2,2-Tetrachloroethane | <0.80 | 0.80 | 79-34-5 | <5.5 | 1/25/2016 | CW |
| Tetrachloroethylene | <0.16 | 0.16 | 127-18-4 | <1.1 | 1/25/2016 | CW |
| Tetrahydrofuran | <0.80 | 0.80 | 109-99-9 | <2.4 | 1/25/2016 | CW |
| Toluene | 3.8 | 0.80 | 108-88-3 | 14 | 1/25/2016 | CW |
| trans-1,2-Dichloroethylene | <0.80 | 0.80 | 156-60-5 | <3.2 | 1/25/2016 | CW |

**Brighton Analytical LLC**
2105 Pless Drive
Brighton, Michigan 48114
Phone: (810)229-7575 (810)229-8650
e-mail:bai-brighton@sbcglobal.net
MDNRE Certified #9404
NELAC Accredited #176507

Sample Date 1/15/2016
Submit Date 1/20/2016
Report Date: 1/28/2016

PM Environmental, Inc.
4080 W. 11 Mile Rd.
Berkley, MI 48072

BA Project # **37400**
BA Sample ID **CC04774**
Method **TO15**

Project Name: **Beacon & Bridge #8**
Project Number: **01-4982-0-006**
Sample ID: **SG-13**

| Analyte Name | ppbv Result | RL | CAS Number | ug/m3 Result | Date Analyzed | Analyst |
|---|---|---|---|---|---|---|
| **Volatile TO15 Analysis** | | | | | | |
| trans-1,3-Dichloropropene | <0.80 | 0.80 | 10061-02-6 | <3.6 | 1/25/2016 | CW |
| 1,2,4-Trichlorobenzene | <0.80 | 0.80 | 120-82-1 | <5.9 | 1/25/2016 | CW |
| 1,1,2-Trichloroethane | <0.80 | 0.80 | 79-00-5 | <4.4 | 1/25/2016 | CW |
| 1,1,1-Trichloroethane | <0.80 | 0.80 | 71-55-6 | <4.4 | 1/25/2016 | CW |
| Trichloroethylene | <0.16 | 0.16 | 79-01-6 | <0.86 | 1/25/2016 | CW |
| Trichlorofluoromethane | <0.80 | 0.80 | 75-69-4 | <4.5 | 1/25/2016 | CW |
| 1,1,2-Trichlorotrifluoroethane(Freon113) | <0.80 | 0.80 | 76-13-1 | <6.1 | 1/25/2016 | CW |
| 1,3,5-Trimethylbenzene | <0.80 | 0.80 | 108-67-8 | <3.9 | 1/25/2016 | CW |
| 1,2,4-Trimethylbenzene | 3.0 | 0.80 | 95-63-6 | 15 | 1/25/2016 | CW |
| 2,2,4-Trimethylpentane | <0.80 | 0.80 | 540-84-1 | <3.7 | 1/25/2016 | CW |
| Vinyl Acetate | <0.80 | 0.80 | 108-05-4 | <2.8 | 1/25/2016 | CW |
| Vinyl chloride | <0.80 | 0.80 | 75-01-4 | <2.0 | 1/25/2016 | CW |
| Xylenes(total) | 350 | 0.80 | 1330-20-7 | 1510 | 1/25/2016 | CW |

RL=Reported detection limit for analytical method requested. Some compounds require special analytical methods to achieve MDNR designated target detection limits (TDL).

Released by Wood
Date 1/28/16

**Brighton Analytical LLC**
2105 Pless Drive
Brighton, Michigan 48114
Phone: (810)229-7575 (810)229-8650
e-mail:bai-brighton@sbcglobal.net
MDNRE Certified #9404
NELAC Accredited #176507

Sample Date 1/15/2016
Submit Date 1/20/2016
Report Date: 1/28/2016

PM Environmental, Inc.
4080 W. 11 Mile Rd.
Berkley, MI 48072

BA Project # **37400**
BA Sample ID **CC04775**
Method **TO15**

Project Name: **Beacon & Bridge #8**
Project Number: **01-4982-0-006**
Sample ID: **SG-19**

| Analyte Name | ppbv Result | RL | CAS Number | ug/m3 Result | Date Analyzed | Analyst |
|---|---|---|---|---|---|---|
| **Volatile TO15 Analysis** | | | | | | |
| Acetone | 260 | 40 | 67-64-1 | 620 | 1/25/2016 | CW |
| Benzene | <40 | 40 | 71-43-2 | <130 | 1/25/2016 | CW |
| Benzyl Chloride | <40 | 40 | 100-44-7 | <205 | 1/25/2016 | CW |
| Bromodichloromethane | <40 | 40 | 75-27-4 | <170 | 1/25/2016 | CW |
| Bromoethene | <40 | 40 | 593-60-2 | <175 | 1/25/2016 | CW |
| Bromoform | <40 | 40 | 75-25-2 | <415 | 1/25/2016 | CW |
| Bromomethane | <40 | 40 | 74-83-9 | <155 | 1/25/2016 | CW |
| 1,3-Butadiene | <40 | 40 | 106-99-0 | <90 | 1/25/2016 | CW |
| Carbon disulfide | <40 | 40 | 75-15-0 | <125 | 1/25/2016 | CW |
| Carbon tetrachloride | <40 | 40 | 56-23-5 | <150 | 1/25/2016 | CW |
| Chlorobenzene | <40 | 40 | 108-90-7 | <185 | 1/25/2016 | CW |
| Chloroethane | <40 | 40 | 75-00-3 | <105 | 1/25/2016 | CW |
| Chloroform | <40 | 40 | 67-66-3 | <195 | 1/25/2016 | CW |
| Chloromethane | <40 | 40 | 74-87-3 | <85 | 1/25/2016 | CW |
| 3-Chloropropene | <40 | 40 | 107-05-1 | <125 | 1/25/2016 | CW |
| 2-Chlorotoluene | <40 | 40 | 95-49-8 | <205 | 1/25/2016 | CW |
| cis-1,2-Dichloroethylene | <40 | 40 | 156-59-2 | <160 | 1/25/2016 | CW |
| cis-1,3-Dichloropropene | <40 | 40 | 10061-01-5 | <180 | 1/25/2016 | CW |
| Cyclohexane | <40 | 40 | 110-82-7 | <140 | 1/25/2016 | CW |
| Dibromochloromethane | <40 | 40 | 124-48-1 | <340 | 1/25/2016 | CW |
| 1,2-Dibromoethane | <40 | 40 | 106-93-4 | <305 | 1/25/2016 | CW |
| 1,4-Dichlorobenzene | <40 | 40 | 106-46-7 | <240 | 1/25/2016 | CW |
| 1,2-Dichlorobenzene | <40 | 40 | 95-50-1 | <240 | 1/25/2016 | CW |
| 1,3-Dichlorobenzene | <40 | 40 | 541-73-1 | <240 | 1/25/2016 | CW |
| Dichlorodifluoromethane | <40 | 40 | 75-71-8 | <200 | 1/25/2016 | CW |
| 1,2-Dichloroethane | <40 | 40 | 107-06-2 | <160 | 1/25/2016 | CW |
| 1,1-Dichloroethane | <40 | 40 | 75-34-3 | <160 | 1/25/2016 | CW |
| 1,1-Dichloroethylene | <40 | 40 | 75-35-4 | <160 | 1/25/2016 | CW |

**Brighton Analytical LLC**
2105 Pless Drive
Brighton, Michigan 48114
Phone: (810)229-7575 (810)229-8650
e-mail:bai-brighton@sbcglobal.net
MDNRE Certified #9404
NELAC Accredited #176507

Sample Date 1/15/2016
Submit Date 1/20/2016
Report Date: 1/28/2016

PM Environmental, Inc.
4080 W. 11 Mile Rd.
Berkley, MI 48072

BA Project # **37400**
BA Sample ID **CC04775**
Method **TO15**

Project Name: **Beacon & Bridge #8**
Project Number: **01-4982-0-006**
Sample ID: **SG-19**

| Analyte Name | ppbv Result | RL | CAS Number | ug/m3 Result | Date Analyzed | Analyst |
|---|---|---|---|---|---|---|
| **Volatile TO15 Analysis** | | | | | | |
| 1,2-Dichloropropane | <40 | 40 | 78-87-5 | <185 | 1/25/2016 | CW |
| Dichlorotetrafluoroethane(Freon 114) | <40 | 40 | 76-14-2 | <280 | 1/25/2016 | CW |
| 1,4-Dioxane | <40 | 40 | 123-91-1 | <145 | 1/25/2016 | CW |
| Ethanol | <100 | 100 | 64-17-5 | <190 | 1/25/2016 | CW |
| Ethyl Acetate | <40 | 40 | 141-78-6 | <145 | 1/25/2016 | CW |
| Ethylbenzene | 2800 | 40 | 100-41-4 | 12000 | 1/25/2016 | CW |
| 4-Ethyltoluene | <40 | 40 | 622-96-8 | <195 | 1/25/2016 | CW |
| Heptane | <40 | 40 | 142-82-5 | <165 | 1/25/2016 | CW |
| Hexachlorobutadiene | <40 | 40 | 87-68-3 | <425 | 1/25/2016 | CW |
| Hexane | <40 | 40 | 110-54-3 | <140 | 1/25/2016 | CW |
| 2-Hexanone | <40 | 40 | 591-78-6 | <165 | 1/25/2016 | CW |
| Isopropyl Alcohol | <40 | 40 | 67-63-0 | <100 | 1/25/2016 | CW |
| Methyl ethyl ketone | 320 | 40 | 78-93-3 | 960 | 1/25/2016 | CW |
| Methyl Isobutyl Ketone | <40 | 40 | 108-10-1 | <165 | 1/25/2016 | CW |
| Methyl Tert Butyl Ether | <40 | 40 | 1634-04-4 | <145 | 1/25/2016 | CW |
| Methylene chloride | <40 | 40 | 75-09-2 | <140 | 1/25/2016 | CW |
| Methylmethacrylate | <40 | 40 | 80-62-6 | <165 | 1/25/2016 | CW |
| m,p-Xylene | 11000* | 40 | 108-38-3/106-42-3 | 49000* | 1/25/2016 | CW |
| Naphthalene | <40 | 40 | 91-20-3 | <210 | 1/25/2016 | CW |
| o-Xylene | 4400* | 40 | 95-47-6 | 19000* | 1/25/2016 | CW |
| Propylene | <100 | 100 | 115-07-1 | <170 | 1/25/2016 | CW |
| Styrene | <40 | 40 | 100-42-5 | <170 | 1/25/2016 | CW |
| Tertiary Butyl Alcohol | <40 | 40 | 75-65-0 | <120 | 1/25/2016 | CW |
| 1,1,2,2-Tetrachloroethane | <40 | 40 | 79-34-5 | <275 | 1/25/2016 | CW |
| Tetrachloroethylene | <8.0 | 8.0 | 127-18-4 | <55 | 1/25/2016 | CW |
| Tetrahydrofuran | <40 | 40 | 109-99-9 | <120 | 1/25/2016 | CW |
| Toluene | <40 | 40 | 108-88-3 | <150 | 1/25/2016 | CW |
| trans-1,2-Dichloroethylene | <40 | 40 | 156-60-5 | <160 | 1/25/2016 | CW |

**Brighton Analytical LLC**
2105 Pless Drive
Brighton, Michigan 48114
Phone: (810)229-7575 (810)229-8650
e-mail:bai-brighton@sbcglobal.net
MDNRE Certified #9404
NELAC Accredited #176507

Sample Date 1/15/2016
Submit Date 1/20/2016
Report Date: 1/28/2016

PM Environmental, Inc.
4080 W. 11 Mile Rd.
Berkley, MI 48072

BA Project # **37400**
BA Sample ID **CC04775**
Method **TO15**

Project Name: **Beacon & Bridge #8**
Project Number: **01-4982-0-006**
Sample ID: **SG-19**

| Analyte Name | ppbv Result | RL | CAS Number | ug/m3 Result | Date Analyzed | Analyst |
|---|---|---|---|---|---|---|
| **Volatile TO15 Analysis** | | | | | | |
| trans-1,3-Dichloropropene | <40 | 40 | 10061-02-6 | <180 | 1/25/2016 | CW |
| 1,2,4-Trichlorobenzene | <40 | 40 | 120-82-1 | <295 | 1/25/2016 | CW |
| 1,1,1-Trichloroethane | <40 | 40 | 71-55-6 | <220 | 1/25/2016 | CW |
| 1,1,2-Trichloroethane | <40 | 40 | 79-00-5 | <220 | 1/25/2016 | CW |
| Trichloroethylene | <8.0 | 8.0 | 79-01-6 | <43 | 1/25/2016 | CW |
| Trichlorofluoromethane | <40 | 40 | 75-69-4 | <225 | 1/25/2016 | CW |
| 1,1,2-Trichlorotrifluoroethane(Freon113) | <40 | 40 | 76-13-1 | <305 | 1/25/2016 | CW |
| 1,3,5-Trimethylbenzene | <40 | 40 | 108-67-8 | <195 | 1/25/2016 | CW |
| 1,2,4-Trimethylbenzene | <40 | 40 | 95-63-6 | <195 | 1/25/2016 | CW |
| 2,2,4-Trimethylpentane | <40 | 40 | 540-84-1 | <185 | 1/25/2016 | CW |
| Vinyl Acetate | <40 | 40 | 108-05-4 | <140 | 1/25/2016 | CW |
| Vinyl chloride | <40 | 40 | 75-01-4 | <100 | 1/25/2016 | CW |
| Xylenes(total) | 15400* | 40 | 1330-20-7 | 68000* | 1/25/2016 | CW |

RL=Reported detection limit for analytical method requested. Some compounds require special analytical methods to achieve MDNR designated target detection limits (TDL).

Elevated volatile dl due to sample matrix.
*Over range of curve

Released by CWood
Date 1/28/16

Brighton Analytical L.L.C.™
2105 Pless Drive · Brighton, Michigan 48114 · Phone (810) 229-7575 · Fax (810) 229-8650 · E-mail bai-brighton@sbcglobal.net

January 28, 2016

PM Environmental, Inc.
4080 W. 11 Mile Rd.
Berkley, MI 48072

Subject: B&B #8
01-4982-0-005

Dear Ms. Santiago :

Thank you for making Brighton Analytical, L.L.C. your laboratory of choice. Attached are the results for the samples submitted on 01/15/2016 for the above mentioned project. NELAP/TNI Accredited Analysis and MDEQ Drinking Water Certified Analysis will be identified in their respective reporting formats. Hard copies can be supplied at your request for a fee of $20.00 per copy.

The invoice for this project will be emailed separately. If you have any questions concerning the data or invoice, please don't hesitate to contact our office. We welcome your comments and suggestions to improve our quality systems. Please reference Brighton Analytical, L.L.C. Project ID 37363 when calling or emailing. We thank you for this opportunity to partner with you on this project and hope to work with you again in the future.

Sincerely,
Brighton Analytical, L.L.C.

DEQ
NELAP ACCREDITED TNI LABORATORY
Certified WBENC Women's Business Enterprise

# Brighton Analytical, L.L.C.™

Email: bai-brighton@sbcglobal.net
2105 Pless Drive
Brighton, MI 48114
Phone: 810-229-7575
Fax: 810-229-8650

BA PROJECT #: 37363

PAGE 1 OF 1

**ABBREVIATIONS FOR MATRIX**
S = Solid
L = Liquid
DW = Drinking $H_2O$
O = Oil
P = Wipe
A = Air (Tedlar Bag)
F = Filter
T = Tube
M = Misc.

PROJECT NAME: B+B #8

PROJECT #: 01-49820-005

PO #: (PLEASE NOTE IF DIFFERENT BILLING ADDRESS)

Sample collected by: CW

**REQUESTED TURNAROUND:** (circle one)
**Rush:** 1-5 business days (verify with lab & specify date needed)
1 Day = 2.5X Cost 2 Day = 2X Cost 3 Day = 1.5X Cost
**Standard:** 5 business days

If RUSH, approved by: _____

**Analysis Requested/Method**

**COMPANY/MAILING ADDRESS:**
PM ENV
4080 11 Mile
Berkley MI
ATTN: Christie Santiago
PHONE: 248-336-9988
FAX OR EMAIL: SANTIAGO@PMENV.COM

Samples received within hold time? yes ☒ no ☐
Temperature of samples °C:
pHs verified in login? yes ☐ no ☒
Headspace/bubbles in VOA's? yes ☐ no ☐ n/a ☒
Sample containers and COC match? yes ☒ no ☐

| Brighton ID # | Sample Description | Sample Coll. Date | Sample Coll. Time | VOA'S (PRES) Y N N/A | HDPE UNPRESERVED | HDPE HNO3 | HDPE H2SO4 | HDPE NaOH | AMBER PRESERVED? | GLASS, NO PRESERVATIVE | STERILIZED BACTERIA | MEOH Preserved Y N | Sample Matrix | TOLS |
|---|---|---|---|---|---|---|---|---|---|---|---|---|---|---|
| C004585 | SG-21 | 1-13-16 | 1310 | | | | | | | | | | A | X |
| 2) 86 | SG-15 | 1-13 | 1325 | | | | | | | | | | | X |
| 3) 87 | SG-14 | 1-13 | 1310 | | | | | | | | | | | X |
| 4) 88 | SG-20 | 1-13 | 1205 | | | | | | | | | | | X |
| 5) 89 | SG-17 | 1-13 | 1520 | | | | | | | | | | | X |
| 6) 90 | SG-16 | 1-13 | 1405 | | | | | | | | | | | X |
| 7) | | | | | | | | | | | | | | |
| 8) | | | | | | | | | | | | | | |
| 9) | | | | | | | | | | | | | | |
| 10) | | | | | | | | | | | | | | |

**BILLING ADDRESS (IF REQUIRED):**

**Drinking $H_2O$:**
Fax to LCHD? yes ☐ no ☐
Chlorinated Water Supply? yes ☐ no ☐
AMT.: _____

MCL Failure: yes ☐ no ☐
Client Notified (date/time/initials): _____

**Special Instructions:**

***Please fill out the Chain of Custody completely and review. Incorrect or incomplete information will result in a "hold" on all analyses.***

| Trans. # | RELINQUISHED BY: | RECEIVED BY: | DATE: | TIME: | Trans. # | RELINQUISHED BY: | RECEIVED BY: | DATE: | TIME: |
|---|---|---|---|---|---|---|---|---|---|
| 1 | [signature] | PME Storage | 1-11-16 | 1800 | 3 | PME Storage | [signature] | 1/14/16 | 13:00 |
| 2 | [signature] | [signature] | 1-15-16 | 09:00 | 4 | | | | |

Brighton Analytical L.L.C.

COC ADDENDA

DATE 1-8-16 4585

COMPANY Pru (Cherokee)

CONTAINER AND SERIAL # 1L Bottle Vac #12638 w 5 min sampler

CONTAINER CLEANED 12-21-15 SIGNED [illegible]

VACUUM OUT 28" hg 1-8-16 SIGNED [illegible]

SAMPLE DATE/REPRESENTATIVE 1-11-16

PROJECT NAME/NUMBER 01-4982-0-005

| SAMPLE ID | TIME START | TIME END | VACUUM START | VACUUM END | VOLUME | FLOW RATE |
|---|---|---|---|---|---|---|
| [illegible] | 1500 | 1510 | 2 | 1 | [illegible] | |

Lab ID_____ Lab Project #_____

Date Analyzed_____ Temp/Pressure_____ Tube ID_____

Volume Calcualtion_____

Tank Dilution_____

Tube Dilution_____

19.1

22.1

Brighton Analytical L.L.C.

COC ADDENDA

4586

DATE 1-11-15

COMPANY PM

CONTAINER AND SERIAL # 1 L Bottle MRC #12636 w Swin sampler

CONTAINER CLEANED 12-15-15 SIGNED [illegible]

VACUUM OUT 28" hg 1-11-16 SIGNED [illegible]

SAMPLE DATE/REPRESENTATIVE 1/13/16

PROJECT NAME/NUMBER Beam & Bridge #8 01-4982-0-005

| SAMPLE ID | TIME START | TIME END | VACUUM START | VACUUM END | VOLUME | FLOW RATE |
|---|---|---|---|---|---|---|
| SG-15 | 1320 | 1325 | 23" HG | 2" HG | 1L | Less 200 mL/min |

Lab ID_____ Lab Project #_____

Date Analyzed_____ Temp/Pressure_____ Tube ID_____

Volume Calcualtion_____

Tank Dilution_____

Tube Dilution_____

Brighton Analytical L.L.C.

COC ADDENDA

DATE 1-8-15

COMPANY PM (Chevron)

CONTAINER AND SERIAL # 1 L BOTTLE VAC # 12637 4587

CONTAINER CLEANED 12-21-15 SIGNED [illegible]

VACUUM OUT 27" hg 1-8-16 SIGNED [illegible]

SAMPLE DATE/REPRESENTATIVE 1/13/16

PROJECT NAME/NUMBER Beacon & Bridge #8

| SAMPLE ID | TIME START | TIME END | VACUUM START | VACUUM END | VOLUME | FLOW RATE |
|---|---|---|---|---|---|---|
| SG-14 | 1305 | 1310 | 21" HG | 1" HG | 1 l | <200 ml/m |

Lab ID_____ Lab Project #_____

Date Analyzed_____ Temp/Pressure_____ Tube ID_____

Volume Calcualtion_____

Tank Dilution_____

Tube Dilution_____

| | | | |
|---|---|---|---|
| O2 | 19.4 % | O2 | 19.8 % |
| VOC PPM | 0.5 PPM | VOC PPM | 0.0 PPM |
| H2SO4 | 0.0 | H2SO4 | 0.0 |
| CO | 0.0 | CO | 0.0 |

Brighton Analytical L.L.C.

COC ADDENDA

DATE 1-8-16

COMPANY Pu (Ckosh)

CONTAINER AND SERIAL # 1L BOTTLE VAC #12635 w 5 min sampler

CONTAINER CLEANED 12-17-15 SIGNED [illegible]

VACUUM OUT 28" hg 1-8-16 SIGNED [illegible]

4588

SAMPLE DATE/REPRESENTATIVE 1-13-16 CW

PROJECT NAME/NUMBER 01-4982-0-005

| SAMPLE ID | TIME START | TIME END | VACUUM START | VACUUM END | VOLUME | FLOW RATE |
|---|---|---|---|---|---|---|
| SG-20 | 1200 | 1205 | 20 | 0 | 1L | |

Lab ID_____ Lab Project #_____

Date Analyzed_____ Temp/Pressure_____ Tube ID_____

Volume Calcualtion_____

Tank Dilution_____

Tube Dilution_____

20.1
.02

Brighton Analytical L.L.C.

COC ADDENDA

DATE 1-11-15

4589

COMPANY PLN

CONTAINER AND SERIAL # 1 L BOTTLE VOC #1442 w 5 min sampler

CONTAINER CLEANED 10-14-15 SIGNED [illegible]

VACUUM OUT 28" Hg 1-11-15 SIGNED [illegible]

SAMPLE DATE/REPRESENTATIVE CW 1-13-15

PROJECT NAME/NUMBER G1-49620.0.005

| SAMPLE ID | TIME START | TIME END | VACUUM START | VACUUM END | VOLUME | FLOW RATE |
|---|---|---|---|---|---|---|
| SG-17 | 1515 | 1520 | 20 | 2 | 1L | 200 |

Lab ID_____ Lab Project #_____

Date Analyzed_____ Temp/Pressure_____ Tube ID_____

Volume Calcualtion_____

Tank Dilution_____

Tube Dilution_____

Brighton Analytical L.L.C.

COC ADDENDA

DATE 1-11-16

COMPANY PM

CONTAINER AND SERIAL # 1 L BOTTLE VAC #1453 w 5 min sampler

CONTAINER CLEANED 12-17-15 SIGNED [illegible]

VACUUM OUT 28"Hg 1-11-16 SIGNED [illegible]

SAMPLE DATE/REPRESENTATIVE 1/13/16

4590

PROJECT NAME/NUMBER Bacon & Bridge

| SAMPLE ID | TIME START | TIME END | VACUUM START | VACUUM END | VOLUME | FLOW RATE |
|---|---|---|---|---|---|---|
| SG-16 | 1400 | 1405 | 21" Hg | 2" Hg | 1 l | Less 200 mL/min |

Lab ID_____ Lab Project #_____

Date Analyzed_____ Temp/Pressure_____ Tube ID_____

Volume Calcualtion_____

Tank Dilution_____

Tube Dilution_____

**Brighton Analytical LLC**
2105 Pless Drive
Brighton, Michigan 48114
Phone: (810)229-7575 (810)229-8650
e-mail:bai-brighton@sbcglobal.net
MDNRE Certified #9404
NELAC Accredited #176507

Sample Date 1/11/2016
Submit Date 1/15/2016
Report Date: 1/28/2016

PM Environmental, Inc.
4080 W. 11 Mile Rd.
Berkley, MI 48072

BA Project # **37363**
BA Sample ID **CC04585**
Method **TO15**

Project Name: **B&B #8**
Project Number: **01-4982-0-005**
Sample ID: **SG-21**

| Analyte Name | ppbv Result | RL | CAS Number | ug/m3 Result | Date Analyzed | Analyst |
|---|---|---|---|---|---|---|
| **Volatile TO15 Analysis** | | | | | | |
| Acetone | <0.80 | 0.80 | 67-64-1 | <1.9 | 1/25/2016 | CW |
| Benzene | 23 | 0.80 | 71-43-2 | 72 | 1/25/2016 | CW |
| Benzyl Chloride | <0.80 | 0.80 | 100-44-7 | <4.1 | 1/25/2016 | CW |
| Bromodichloromethane | <0.80 | 0.80 | 75-27-4 | <5.4 | 1/25/2016 | CW |
| Bromoethene | <0.80 | 0.80 | 593-60-2 | <3.5 | 1/25/2016 | CW |
| Bromoform | <0.80 | 0.80 | 75-25-2 | <8.3 | 1/25/2016 | CW |
| Bromomethane | <0.80 | 0.80 | 74-83-9 | <3.1 | 1/25/2016 | CW |
| 1,3-Butadiene | <0.80 | 0.80 | 106-99-0 | <1.8 | 1/25/2016 | CW |
| Carbon disulfide | <0.80 | 0.80 | 75-15-0 | <2.5 | 1/25/2016 | CW |
| Carbon tetrachloride | <0.80 | 0.80 | 56-23-5 | <5.0 | 1/25/2016 | CW |
| Chlorobenzene | <0.80 | 0.80 | 108-90-7 | <3.7 | 1/25/2016 | CW |
| Chloroethane | <0.80 | 0.80 | 75-00-3 | <2.1 | 1/25/2016 | CW |
| Chloroform | <0.80 | 0.80 | 67-66-3 | <3.9 | 1/25/2016 | CW |
| Chloromethane | <0.80 | 0.80 | 74-87-3 | <1.7 | 1/25/2016 | CW |
| 3-Chloropropene | <0.80 | 0.80 | 107-05-1 | <2.5 | 1/25/2016 | CW |
| 2-Chlorotoluene | <0.80 | 0.80 | 95-49-8 | <4.1 | 1/25/2016 | CW |
| cis-1,2-Dichloroethylene | <0.80 | 0.80 | 156-59-2 | <3.2 | 1/25/2016 | CW |
| cis-1,3-Dichloropropene | <0.80 | 0.80 | 10061-01-5 | <3.6 | 1/25/2016 | CW |
| Cyclohexane | 4500* | 40 | 110-82-7 | 16000* | 1/25/2016 | CW |
| Dibromochloromethane | <0.80 | 0.80 | 124-48-1 | <6.8 | 1/25/2016 | CW |
| 1,2-Dibromoethane | <0.80 | 0.80 | 106-93-4 | <6.1 | 1/25/2016 | CW |
| 1,4-Dichlorobenzene | <0.80 | 0.80 | 106-46-7 | <4.8 | 1/25/2016 | CW |
| 1,2-Dichlorobenzene | <0.80 | 0.80 | 95-50-1 | <4.8 | 1/25/2016 | CW |
| 1,3-Dichlorobenzene | <0.80 | 0.80 | 541-73-1 | <4.8 | 1/25/2016 | CW |
| Dichlorodifluoromethane | <0.80 | 0.80 | 75-71-8 | <4.0 | 1/25/2016 | CW |
| 1,1-Dichloroethane | <0.80 | 0.80 | 75-34-3 | <3.2 | 1/25/2016 | CW |
| 1,2-Dichloroethane | <0.80 | 0.80 | 107-06-2 | <3.2 | 1/25/2016 | CW |
| 1,1-Dichloroethylene | <0.80 | 0.80 | 75-35-4 | <3.2 | 1/25/2016 | CW |

**Brighton Analytical LLC**
2105 Pless Drive
Brighton, Michigan 48114
Phone: (810)229-7575 (810)229-8650
e-mail:bai-brighton@sbcglobal.net
MDNRE Certified #9404
NELAC Accredited #176507

Sample Date 1/11/2016
Submit Date 1/15/2016
Report Date: 1/28/2016

PM Environmental, Inc.
4080 W. 11 Mile Rd.
Berkley, MI 48072

BA Project # **37363**
BA Sample ID **CC04585**
Method **TO15**

Project Name: **B&B #8**
Project Number: **01-4982-0-005**
Sample ID: **SG-21**

| Analyte Name | ppbv Result | RL | CAS Number | ug/m3 Result | Date Analyzed | Analyst |
|---|---|---|---|---|---|---|
| **Volatile TO15 Analysis** | | | | | | |
| 1,2-Dichloropropane | <0.80 | 0.80 | 78-87-5 | <3.7 | 1/25/2016 | CW |
| Dichlorotetrafluoroethane(Freon114) | <0.80 | 0.80 | 76-14-2 | <5.6 | 1/25/2016 | CW |
| 1,4-Dioxane | <0.80 | 0.80 | 123-91-1 | <2.9 | 1/25/2016 | CW |
| Ethanol | <2.0 | 2.0 | 64-17-5 | <3.8 | 1/25/2016 | CW |
| Ethyl Acetate | <0.80 | 0.80 | 141-78-6 | <2.9 | 1/25/2016 | CW |
| Ethylbenzene | 7.4 | 0.80 | 100-41-4 | 32 | 1/25/2016 | CW |
| 4-Ethyltoluene | <0.80 | 0.80 | 622-96-8 | <3.9 | 1/25/2016 | CW |
| Heptane | <0.80 | 0.80 | 142-82-5 | <3.3 | 1/25/2016 | CW |
| Hexachlorobutadiene | <0.80 | 0.80 | 87-68-3 | <8.5 | 1/25/2016 | CW |
| Hexane | 50 | 0.80 | 110-54-3 | 180 | 1/25/2016 | CW |
| 2-Hexanone | <0.80 | 0.80 | 591-78-6 | <3.3 | 1/25/2016 | CW |
| Isopropyl Alcohol | <0.80 | 0.80 | 67-63-0 | <2.0 | 1/25/2016 | CW |
| Methyl ethyl ketone | <0.80 | 0.80 | 78-93-3 | <2.4 | 1/25/2016 | CW |
| Methyl Isobutyl Ketone | <0.80 | 0.80 | 108-10-1 | <3.3 | 1/25/2016 | CW |
| Methyl Tert Butyl Ether | <0.80 | 0.80 | 1634-04-4 | <2.9 | 1/25/2016 | CW |
| Methylene chloride | <0.80 | 0.80 | 75-09-2 | <2.8 | 1/25/2016 | CW |
| Methylmethacrylate | <0.80 | 0.80 | 80-62-6 | <3.3 | 1/25/2016 | CW |
| m,p-Xylene | 17 | 0.80 | 108-38-3/106-42-3 | 74 | 1/25/2016 | CW |
| Naphthalene | <0.80 | 0.80 | 91-20-3 | <4.2 | 1/25/2016 | CW |
| o-Xylene | 23 | 0.80 | 95-47-6 | 100 | 1/25/2016 | CW |
| Propylene | <2.0 | 2.0 | 115-07-1 | <3.4 | 1/25/2016 | CW |
| Styrene | <0.80 | 0.80 | 100-42-5 | <3.4 | 1/25/2016 | CW |
| Tertiary Butyl Alcohol | <0.80 | 0.80 | 75-65-0 | <2.4 | 1/25/2016 | CW |
| 1,1,2,2-Tetrachloroethane | <0.80 | 0.80 | 79-34-5 | <5.5 | 1/25/2016 | CW |
| Tetrachloroethylene | 39 | 0.16 | 127-18-4 | 260 | 1/25/2016 | CW |
| Tetrahydrofuran | <0.80 | 0.80 | 109-99-9 | <2.4 | 1/25/2016 | CW |
| Toluene | 21 | 0.80 | 108-88-3 | 79 | 1/25/2016 | CW |
| trans-1,2-Dichloroethylene | <0.80 | 0.80 | 156-60-5 | <3.2 | 1/25/2016 | CW |

**Brighton Analytical LLC**
2105 Pless Drive
Brighton, Michigan 48114
Phone: (810)229-7575 (810)229-8650
e-mail:bai-brighton@sbcglobal.net
MDNRE Certified #9404
NELAC Accredited #176507

Sample Date 1/11/2016
Submit Date 1/15/2016
Report Date: 1/28/2016

PM Environmental, Inc.
4080 W. 11 Mile Rd.
Berkley, MI 48072

BA Project # **37363**
BA Sample ID **CC04585**
Method **TO15**

Project Name: **B&B #8**
Project Number: **01-4982-0-005**
Sample ID: **SG-21**

| Analyte Name | ppbv Result | RL | CAS Number | ug/m3 Result | Date Analyzed | Analyst |
|---|---|---|---|---|---|---|
| **Volatile TO15 Analysis** | | | | | | |
| trans-1,3-Dichloropropene | <0.80 | 0.80 | 10061-02-6 | <3.6 | 1/25/2016 | CW |
| 1,2,4-Trichlorobenzene | <0.80 | 0.80 | 120-82-1 | <5.9 | 1/25/2016 | CW |
| 1,1,2-Trichloroethane | <0.80 | 0.80 | 79-00-5 | <4.4 | 1/25/2016 | CW |
| 1,1,1-Trichloroethane | <0.80 | 0.80 | 71-55-6 | <4.4 | 1/25/2016 | CW |
| Trichloroethylene | <0.16 | 0.16 | 79-01-6 | <0.86 | 1/25/2016 | CW |
| Trichlorofluoromethane | <0.80 | 0.80 | 75-69-4 | <4.5 | 1/25/2016 | CW |
| 1,1,2-Trichlorotrifluoroethane(Freon113) | <0.80 | 0.80 | 76-13-1 | <6.1 | 1/25/2016 | CW |
| 1,3,5-Trimethylbenzene | 1.9 | 0.80 | 108-67-8 | 9.2 | 1/25/2016 | CW |
| 1,2,4-Trimethylbenzene | 5.4 | 0.80 | 95-63-6 | 26 | 1/25/2016 | CW |
| 2,2,4-Trimethylpentane | 4900* | 40 | 540-84-1 | 23000* | 1/25/2016 | CW |
| Vinyl Acetate | <0.80 | 0.80 | 108-05-4 | <2.8 | 1/25/2016 | CW |
| Vinyl chloride | <0.80 | 0.80 | 75-01-4 | <2.0 | 1/25/2016 | CW |
| Xylenes(total) | 40 | 0.80 | 1330-20-7 | 174 | 1/25/2016 | CW |

RL=Reported detection limit for analytical method requested. Some compounds require special analytical methods to achieve MDNR designated target detection limits (TDL).

Elevated volatile dl due to sample matrix.
*Over range of curve

Released by [signature]
Date 1/28/16

**Brighton Analytical LLC**
2105 Pless Drive
Brighton, Michigan 48114
Phone: (810)229-7575 (810)229-8650
e-mail:bai-brighton@sbcglobal.net
MDNRE Certified #9404
NELAC Accredited #176507

Sample Date 1/13/2016
Submit Date 1/15/2016
Report Date: 1/28/2016

PM Environmental, Inc.
4080 W. 11 Mile Rd.
Berkley, MI 48072

BA Project # **37363**
BA Sample ID **CC04586**
Method **TO15**

Project Name: **B&B #8**
Project Number: **01-4982-0-005**
Sample ID: **SG-15**

| Analyte Name | ppbv Result | RL | CAS Number | ug/m3 Result | Date Analyzed | Analyst |
|---|---|---|---|---|---|---|
| **Volatile TO15 Analysis** | | | | | | |
| Acetone | 18 | 0.80 | 67-64-1 | 43 | 1/25/2016 | CW |
| Benzene | <0.80 | 0.80 | 71-43-2 | <2.6 | 1/25/2016 | CW |
| Benzyl Chloride | <0.80 | 0.80 | 100-44-7 | <4.1 | 1/25/2016 | CW |
| Bromodichloromethane | <0.80 | 0.80 | 75-27-4 | <5.4 | 1/25/2016 | CW |
| Bromoethene | <0.80 | 0.80 | 593-60-2 | <3.5 | 1/25/2016 | CW |
| Bromoform | <0.80 | 0.80 | 75-25-2 | <8.3 | 1/25/2016 | CW |
| Bromomethane | <0.80 | 0.80 | 74-83-9 | <3.1 | 1/25/2016 | CW |
| 1,3-Butadiene | <0.80 | 0.80 | 106-99-0 | <1.8 | 1/25/2016 | CW |
| Carbon disulfide | <0.80 | 0.80 | 75-15-0 | <2.5 | 1/25/2016 | CW |
| Carbon tetrachloride | <0.80 | 0.80 | 56-23-5 | <5.0 | 1/25/2016 | CW |
| Chlorobenzene | <0.80 | 0.80 | 108-90-7 | <3.7 | 1/25/2016 | CW |
| Chloroethane | <0.80 | 0.80 | 75-00-3 | <2.1 | 1/25/2016 | CW |
| Chloroform | <0.80 | 0.80 | 67-66-3 | <3.9 | 1/25/2016 | CW |
| Chloromethane | <0.80 | 0.80 | 74-87-3 | <1.7 | 1/25/2016 | CW |
| 3-Chloropropene | <0.80 | 0.80 | 107-05-1 | <2.5 | 1/25/2016 | CW |
| 2-Chlorotoluene | <0.80 | 0.80 | 95-49-8 | <4.1 | 1/25/2016 | CW |
| cis-1,2-Dichloroethylene | <0.80 | 0.80 | 156-59-2 | <3.2 | 1/25/2016 | CW |
| cis-1,3-Dichloropropene | <0.80 | 0.80 | 10061-01-5 | <3.6 | 1/25/2016 | CW |
| Cyclohexane | <0.80 | 0.80 | 110-82-7 | <2.8 | 1/25/2016 | CW |
| Dibromochloromethane | <0.80 | 0.80 | 124-48-1 | <6.8 | 1/25/2016 | CW |
| 1,2-Dibromoethane | <0.80 | 0.80 | 106-93-4 | <6.1 | 1/25/2016 | CW |
| 1,2-Dichlorobenzene | <0.80 | 0.80 | 95-50-1 | <4.8 | 1/25/2016 | CW |
| 1,3-Dichlorobenzene | <0.80 | 0.80 | 541-73-1 | <4.8 | 1/25/2016 | CW |
| 1,4-Dichlorobenzene | <0.80 | 0.80 | 106-46-7 | <4.8 | 1/25/2016 | CW |
| Dichlorodifluoromethane | <0.80 | 0.80 | 75-71-8 | <4.0 | 1/25/2016 | CW |
| 1,2-Dichloroethane | <0.80 | 0.80 | 107-06-2 | <3.2 | 1/25/2016 | CW |
| 1,1-Dichloroethane | <0.80 | 0.80 | 75-34-3 | <3.2 | 1/25/2016 | CW |
| 1,1-Dichloroethylene | <0.80 | 0.80 | 75-35-4 | <3.2 | 1/25/2016 | CW |

**Brighton Analytical LLC**
2105 Pless Drive
Brighton, Michigan 48114
Phone: (810)229-7575 (810)229-8650
e-mail:bai-brighton@sbcglobal.net
MDNRE Certified #9404
NELAC Accredited #176507

Sample Date 1/13/2016
Submit Date 1/15/2016
Report Date: 1/28/2016

PM Environmental, Inc.
4080 W. 11 Mile Rd.
Berkley, MI 48072

BA Project # **37363**
BA Sample ID **CC04586**
Method **TO15**

Project Name: **B&B #8**
Project Number: **01-4982-0-005**
Sample ID: **SG-15**

| Analyte Name | ppbv Result | RL | CAS Number | ug/m3 Result | Date Analyzed | Analyst |
|---|---|---|---|---|---|---|
| **Volatile TO15 Analysis** | | | | | | |
| 1,2-Dichloropropane | <0.80 | 0.80 | 78-87-5 | <3.7 | 1/25/2016 | CW |
| Dichlorotetrafluoroethane(Freon114) | <0.80 | 0.80 | 76-14-2 | <5.6 | 1/25/2016 | CW |
| 1,4-Dioxane | <0.80 | 0.80 | 123-91-1 | <2.9 | 1/25/2016 | CW |
| Ethanol | <2.0 | 2.0 | 64-17-5 | <3.8 | 1/25/2016 | CW |
| Ethyl Acetate | <0.80 | 0.80 | 141-78-6 | <2.9 | 1/25/2016 | CW |
| Ethylbenzene | 1.5 | 0.80 | 100-41-4 | 6.6 | 1/25/2016 | CW |
| 4-Ethyltoluene | <0.80 | 0.80 | 622-96-8 | <3.9 | 1/25/2016 | CW |
| Heptane | <0.80 | 0.80 | 142-82-5 | <3.3 | 1/25/2016 | CW |
| Hexachlorobutadiene | <0.80 | 0.80 | 87-68-3 | <8.5 | 1/25/2016 | CW |
| Hexane | 9.0 | 0.80 | 110-54-3 | 32 | 1/25/2016 | CW |
| 2-Hexanone | <0.80 | 0.80 | 591-78-6 | <3.3 | 1/25/2016 | CW |
| Isopropyl Alcohol | <0.80 | 0.80 | 67-63-0 | <2.0 | 1/25/2016 | CW |
| Methyl ethyl ketone | 58 | 0.80 | 78-93-3 | 170 | 1/25/2016 | CW |
| Methyl Isobutyl Ketone | <0.80 | 0.80 | 108-10-1 | <3.3 | 1/25/2016 | CW |
| Methyl Tert Butyl Ether | <0.80 | 0.80 | 1634-04-4 | <2.9 | 1/25/2016 | CW |
| Methylene chloride | 56 | 0.80 | 75-09-2 | 190 | 1/25/2016 | CW |
| Methylmethacrylate | <0.80 | 0.80 | 80-62-6 | <3.3 | 1/25/2016 | CW |
| m,p-Xylene | 5.0 | 0.80 | 108-38-3/106-42-3 | 22 | 1/25/2016 | CW |
| Naphthalene | <0.80 | 0.80 | 91-20-3 | <4.2 | 1/25/2016 | CW |
| o-Xylene | 1.6 | 0.80 | 95-47-6 | 7.1 | 1/25/2016 | CW |
| Propylene | <2.0 | 2.0 | 115-07-1 | <3.4 | 1/25/2016 | CW |
| Styrene | <0.80 | 0.80 | 100-42-5 | <3.4 | 1/25/2016 | CW |
| Tertiary Butyl Alcohol | <0.80 | 0.80 | 75-65-0 | <2.4 | 1/25/2016 | CW |
| 1,1,2,2-Tetrachloroethane | <0.80 | 0.80 | 79-34-5 | <5.5 | 1/25/2016 | CW |
| Tetrachloroethylene | <0.16 | 0.16 | 127-18-4 | <1.1 | 1/25/2016 | CW |
| Tetrahydrofuran | <0.80 | 0.80 | 109-99-9 | <2.4 | 1/25/2016 | CW |
| Toluene | 6.1 | 0.80 | 108-88-3 | 23 | 1/25/2016 | CW |
| trans-1,2-Dichloroethylene | <0.80 | 0.80 | 156-60-5 | <3.2 | 1/25/2016 | CW |

**Brighton Analytical LLC**
2105 Pless Drive
Brighton, Michigan 48114
Phone: (810)229-7575 (810)229-8650
e-mail:bai-brighton@sbcglobal.net
MDNRE Certified #9404
NELAC Accredited #176507

Sample Date 1/13/2016
Submit Date 1/15/2016
Report Date: 1/28/2016

PM Environmental, Inc.
4080 W. 11 Mile Rd.
Berkley, MI 48072

BA Project # **37363**
BA Sample ID **CC04586**
Method **TO15**

Project Name: **B&B #8**
Project Number: **01-4982-0-005**
Sample ID: **SG-15**

| Analyte Name | ppbv Result | RL | CAS Number | ug/m3 Result | Date Analyzed | Analyst |
|---|---|---|---|---|---|---|
| **Volatile TO15 Analysis** | | | | | | |
| trans-1,3-Dichloropropene | <0.80 | 0.80 | 10061-02-6 | <3.6 | 1/25/2016 | CW |
| 1,2,4-Trichlorobenzene | <0.80 | 0.80 | 120-82-1 | <5.9 | 1/25/2016 | CW |
| 1,1,1-Trichloroethane | <0.80 | 0.80 | 71-55-6 | <4.4 | 1/25/2016 | CW |
| 1,1,2-Trichloroethane | <0.80 | 0.80 | 79-00-5 | <4.4 | 1/25/2016 | CW |
| Trichloroethylene | <0.16 | 0.16 | 79-01-6 | <0.86 | 1/25/2016 | CW |
| Trichlorofluoromethane | <0.80 | 0.80 | 75-69-4 | <4.5 | 1/25/2016 | CW |
| 1,1,2-Trichlorotrifluoroethane(Freon113) | <0.80 | 0.80 | 76-13-1 | <6.1 | 1/25/2016 | CW |
| 1,3,5-Trimethylbenzene | 1.9 | 0.80 | 108-67-8 | 9.1 | 1/25/2016 | CW |
| 1,2,4-Trimethylbenzene | <0.80 | 0.80 | 95-63-6 | <3.9 | 1/25/2016 | CW |
| 2,2,4-Trimethylpentane | <0.80 | 0.80 | 540-84-1 | <3.7 | 1/25/2016 | CW |
| Vinyl Acetate | <0.80 | 0.80 | 108-05-4 | <2.8 | 1/25/2016 | CW |
| Vinyl chloride | <0.80 | 0.80 | 75-01-4 | <2.0 | 1/25/2016 | CW |
| Xylenes(total) | 6.6 | 0.80 | 1330-20-7 | 29.1 | 1/25/2016 | CW |

RL=Reported detection limit for analytical method requested. Some compounds require special analytical methods to achieve MDNR designated target detection limits (TDL).

Released by _____
Date 1/28/16

**Brighton Analytical LLC**
2105 Pless Drive
Brighton, Michigan 48114
Phone: (810)229-7575 (810)229-8650
e-mail:bai-brighton@sbcglobal.net
MDNRE Certified #9404
NELAC Accredited #176507

Sample Date 1/13/2016
Submit Date 1/15/2016
Report Date: 1/28/2016

PM Environmental, Inc.
4080 W. 11 Mile Rd.
Berkley, MI 48072

BA Project # **37363**
BA Sample ID **CC04587**
Method **TO15**

Project Name: **B&B #8**
Project Number: **01-4982-0-005**
Sample ID: **SG-14**

| Analyte Name | ppbv Result | RL | CAS Number | ug/m3 Result | Date Analyzed | Analyst |
|---|---|---|---|---|---|---|
| **Volatile TO15 Analysis** | | | | | | |
| Acetone | 9.1 | 0.80 | 67-64-1 | 22 | 1/25/2016 | CW |
| Benzene | <0.80 | 0.80 | 71-43-2 | <2.6 | 1/25/2016 | CW |
| Benzyl Chloride | <0.80 | 0.80 | 100-44-7 | <4.1 | 1/25/2016 | CW |
| Bromodichloromethane | <0.80 | 0.80 | 75-27-4 | <5.4 | 1/25/2016 | CW |
| Bromoethene | <0.80 | 0.80 | 593-60-2 | <3.5 | 1/25/2016 | CW |
| Bromoform | <0.80 | 0.80 | 75-25-2 | <8.3 | 1/25/2016 | CW |
| Bromomethane | <0.80 | 0.80 | 74-83-9 | <3.1 | 1/25/2016 | CW |
| 1,3-Butadiene | <0.80 | 0.80 | 106-99-0 | <1.8 | 1/25/2016 | CW |
| Carbon disulfide | <0.80 | 0.80 | 75-15-0 | <2.5 | 1/25/2016 | CW |
| Carbon tetrachloride | <0.80 | 0.80 | 56-23-5 | <5.0 | 1/25/2016 | CW |
| Chlorobenzene | <0.80 | 0.80 | 108-90-7 | <3.7 | 1/25/2016 | CW |
| Chloroethane | <0.80 | 0.80 | 75-00-3 | <2.1 | 1/25/2016 | CW |
| Chloroform | <0.80 | 0.80 | 67-66-3 | <3.9 | 1/25/2016 | CW |
| Chloromethane | <0.80 | 0.80 | 74-87-3 | <1.7 | 1/25/2016 | CW |
| 3-Chloropropene | <0.80 | 0.80 | 107-05-1 | <2.5 | 1/25/2016 | CW |
| 2-Chlorotoluene | <0.80 | 0.80 | 95-49-8 | <4.1 | 1/25/2016 | CW |
| cis-1,2-Dichloroethylene | <0.80 | 0.80 | 156-59-2 | <3.2 | 1/25/2016 | CW |
| cis-1,3-Dichloropropene | <0.80 | 0.80 | 10061-01-5 | <3.6 | 1/25/2016 | CW |
| Cyclohexane | <0.80 | 0.80 | 110-82-7 | <2.8 | 1/25/2016 | CW |
| Dibromochloromethane | <0.80 | 0.80 | 124-48-1 | <6.8 | 1/25/2016 | CW |
| 1,2-Dibromoethane | <0.80 | 0.80 | 106-93-4 | <6.1 | 1/25/2016 | CW |
| 1,2-Dichlorobenzene | <0.80 | 0.80 | 95-50-1 | <4.8 | 1/25/2016 | CW |
| 1,4-Dichlorobenzene | <0.80 | 0.80 | 106-46-7 | <4.8 | 1/25/2016 | CW |
| 1,3-Dichlorobenzene | <0.80 | 0.80 | 541-73-1 | <4.8 | 1/25/2016 | CW |
| Dichlorodifluoromethane | <0.80 | 0.80 | 75-71-8 | <4.0 | 1/25/2016 | CW |
| 1,2-Dichloroethane | <0.80 | 0.80 | 107-06-2 | <3.2 | 1/25/2016 | CW |
| 1,1-Dichloroethane | <0.80 | 0.80 | 75-34-3 | <3.2 | 1/25/2016 | CW |
| 1,1-Dichloroethylene | <0.80 | 0.80 | 75-35-4 | <3.2 | 1/25/2016 | CW |

**Brighton Analytical LLC**
2105 Pless Drive
Brighton, Michigan 48114
Phone: (810)229-7575 (810)229-8650
e-mail:bai-brighton@sbcglobal.net
MDNRE Certified #9404
NELAC Accredited #176507

Sample Date 1/13/2016
Submit Date 1/15/2016
Report Date: 1/28/2016

PM Environmental, Inc.
4080 W. 11 Mile Rd.
Berkley, MI 48072

BA Project # **37363**
BA Sample ID **CC04587**
Method **TO15**

Project Name: **B&B #8**
Project Number: **01-4982-0-005**
Sample ID: **SG-14**

| Analyte Name | ppbv Result | RL | CAS Number | ug/m3 Result | Date Analyzed | Analyst |
|---|---|---|---|---|---|---|
| **Volatile TO15 Analysis** | | | | | | |
| 1,2-Dichloropropane | <0.80 | 0.80 | 78-87-5 | <3.7 | 1/25/2016 | CW |
| Dichlorotetrafluoroethane(Freon114) | <0.80 | 0.80 | 76-14-2 | <5.6 | 1/25/2016 | CW |
| 1,4-Dioxane | <0.80 | 0.80 | 123-91-1 | <2.9 | 1/25/2016 | CW |
| Ethanol | <2.0 | 2.0 | 64-17-5 | <3.8 | 1/25/2016 | CW |
| Ethyl Acetate | <0.80 | 0.80 | 141-78-6 | <2.9 | 1/25/2016 | CW |
| Ethylbenzene | 1.4 | 0.80 | 100-41-4 | 6.0 | 1/25/2016 | CW |
| 4-Ethyltoluene | <0.80 | 0.80 | 622-96-8 | <3.9 | 1/25/2016 | CW |
| Heptane | <0.80 | 0.80 | 142-82-5 | <3.3 | 1/25/2016 | CW |
| Hexachlorobutadiene | <0.80 | 0.80 | 87-68-3 | <8.5 | 1/25/2016 | CW |
| Hexane | 5.8 | 0.80 | 110-54-3 | 21 | 1/25/2016 | CW |
| 2-Hexanone | <0.80 | 0.80 | 591-78-6 | <3.3 | 1/25/2016 | CW |
| Isopropyl Alcohol | <0.80 | 0.80 | 67-63-0 | <2.0 | 1/25/2016 | CW |
| Methyl ethyl ketone | 38 | 0.80 | 78-93-3 | 110 | 1/25/2016 | CW |
| Methyl Isobutyl Ketone | <0.80 | 0.80 | 108-10-1 | <3.3 | 1/25/2016 | CW |
| Methyl Tert Butyl Ether | <0.80 | 0.80 | 1634-04-4 | <2.9 | 1/25/2016 | CW |
| Methylene chloride | 37 | 0.80 | 75-09-2 | 130 | 1/25/2016 | CW |
| Methylmethacrylate | <0.80 | 0.80 | 80-62-6 | <3.3 | 1/25/2016 | CW |
| m,p-Xylene | 4.7 | 0.80 | 108-38-3/106-42-3 | 20 | 1/25/2016 | CW |
| Naphthalene | <0.80 | 0.80 | 91-20-3 | <4.2 | 1/25/2016 | CW |
| o-Xylene | 1.6 | 0.80 | 95-47-6 | 7.0 | 1/25/2016 | CW |
| Propylene | <2.0 | 2.0 | 115-07-1 | <3.4 | 1/25/2016 | CW |
| Styrene | <0.80 | 0.80 | 100-42-5 | <3.4 | 1/25/2016 | CW |
| Tertiary Butyl Alcohol | <0.80 | 0.80 | 75-65-0 | <2.4 | 1/25/2016 | CW |
| 1,1,2,2-Tetrachloroethane | <0.80 | 0.80 | 79-34-5 | <5.5 | 1/25/2016 | CW |
| Tetrachloroethylene | 1.1 | 0.16 | 127-18-4 | 7.3 | 1/25/2016 | CW |
| Tetrahydrofuran | <0.80 | 0.80 | 109-99-9 | <2.4 | 1/25/2016 | CW |
| Toluene | 4.8 | 0.80 | 108-88-3 | 18 | 1/25/2016 | CW |
| trans-1,2-Dichloroethylene | <0.80 | 0.80 | 156-60-5 | <3.2 | 1/25/2016 | CW |

**Brighton Analytical LLC**
2105 Pless Drive
Brighton, Michigan 48114
Phone: (810)229-7575 (810)229-8650
e-mail:bai-brighton@sbcglobal.net
MDNRE Certified #9404
NELAC Accredited #176507

Sample Date 1/13/2016
Submit Date 1/15/2016
Report Date: 1/28/2016

PM Environmental, Inc.
4080 W. 11 Mile Rd.
Berkley, MI 48072

BA Project # **37363**
BA Sample ID **CC04587**
Method **TO15**

Project Name: **B&B #8**
Project Number: **01-4982-0-005**
Sample ID: **SG-14**

| Analyte Name | ppbv Result | RL | CAS Number | ug/m3 Result | Date Analyzed | Analyst |
|---|---|---|---|---|---|---|
| **Volatile TO15 Analysis** | | | | | | |
| trans-1,3-Dichloropropene | <0.80 | 0.80 | 10061-02-6 | <3.6 | 1/25/2016 | CW |
| 1,2,4-Trichlorobenzene | <0.80 | 0.80 | 120-82-1 | <5.9 | 1/25/2016 | CW |
| 1,1,1-Trichloroethane | <0.80 | 0.80 | 71-55-6 | <4.4 | 1/25/2016 | CW |
| 1,1,2-Trichloroethane | <0.80 | 0.80 | 79-00-5 | <4.4 | 1/25/2016 | CW |
| Trichloroethylene | <0.16 | 0.16 | 79-01-6 | <0.86 | 1/25/2016 | CW |
| Trichlorofluoromethane | <0.80 | 0.80 | 75-69-4 | <4.5 | 1/25/2016 | CW |
| 1,1,2-Trichlorotrifluoroethane(Freon113) | <0.80 | 0.80 | 76-13-1 | <6.1 | 1/25/2016 | CW |
| 1,3,5-Trimethylbenzene | <0.80 | 0.80 | 108-67-8 | <3.9 | 1/25/2016 | CW |
| 1,2,4-Trimethylbenzene | <0.80 | 0.80 | 95-63-6 | <3.9 | 1/25/2016 | CW |
| 2,2,4-Trimethylpentane | <0.80 | 0.80 | 540-84-1 | <3.7 | 1/25/2016 | CW |
| Vinyl Acetate | <0.80 | 0.80 | 108-05-4 | <2.8 | 1/25/2016 | CW |
| Vinyl chloride | <0.80 | 0.80 | 75-01-4 | <2.0 | 1/25/2016 | CW |
| Xylenes(total) | 6.3 | 0.80 | 1330-20-7 | 27 | 1/25/2016 | CW |

RL=Reported detection limit for analytical method requested. Some compounds require special analytical methods to achieve MDNR designated target detection limits (TDL).

Released by UWood
Date 1/28/16

**Brighton Analytical LLC**
2105 Pless Drive
Brighton, Michigan 48114
Phone: (810)229-7575 (810)229-8650
e-mail:bai-brighton@sbcglobal.net
MDNRE Certified #9404
NELAC Accredited #176507

Sample Date 1/13/2016
Submit Date 1/15/2016
Report Date: 1/28/2016

PM Environmental, Inc.
4080 W. 11 Mile Rd.
Berkley, MI 48072

BA Project # **37363**
BA Sample ID **CC04588**
Method **TO15**

Project Name: **B&B #8**
Project Number: **01-4982-0-005**
Sample ID: **SG-20**

| Analyte Name | ppbv Result | RL | CAS Number | ug/m3 Result | Date Analyzed | Analyst |
|---|---|---|---|---|---|---|
| **Volatile TO15 Analysis** | | | | | | |
| Acetone | 9.5 | 0.80 | 67-64-1 | 22 | 1/25/2016 | CW |
| Benzene | <0.80 | 0.80 | 71-43-2 | <2.6 | 1/25/2016 | CW |
| Benzyl Chloride | <0.80 | 0.80 | 100-44-7 | <4.1 | 1/25/2016 | CW |
| Bromodichloromethane | <0.80 | 0.80 | 75-27-4 | <5.4 | 1/25/2016 | CW |
| Bromoethene | <0.80 | 0.80 | 593-60-2 | <3.5 | 1/25/2016 | CW |
| Bromoform | <0.80 | 0.80 | 75-25-2 | <8.3 | 1/25/2016 | CW |
| Bromomethane | <0.80 | 0.80 | 74-83-9 | <3.1 | 1/25/2016 | CW |
| 1,3-Butadiene | <0.80 | 0.80 | 106-99-0 | <1.8 | 1/25/2016 | CW |
| Carbon disulfide | <0.80 | 0.80 | 75-15-0 | <2.5 | 1/25/2016 | CW |
| Carbon tetrachloride | <0.80 | 0.80 | 56-23-5 | <5.0 | 1/25/2016 | CW |
| Chlorobenzene | <0.80 | 0.80 | 108-90-7 | <3.7 | 1/25/2016 | CW |
| Chloroethane | <0.80 | 0.80 | 75-00-3 | <2.1 | 1/25/2016 | CW |
| Chloroform | <0.80 | 0.80 | 67-66-3 | <3.9 | 1/25/2016 | CW |
| Chloromethane | <0.80 | 0.80 | 74-87-3 | <1.7 | 1/25/2016 | CW |
| 3-Chloropropene | <0.80 | 0.80 | 107-05-1 | <2.5 | 1/25/2016 | CW |
| 2-Chlorotoluene | <0.80 | 0.80 | 95-49-8 | <4.1 | 1/25/2016 | CW |
| cis-1,2-Dichloroethylene | <0.80 | 0.80 | 156-59-2 | <3.2 | 1/25/2016 | CW |
| cis-1,3-Dichloropropene | <0.80 | 0.80 | 10061-01-5 | <3.6 | 1/25/2016 | CW |
| Cyclohexane | <0.80 | 0.80 | 110-82-7 | <2.8 | 1/25/2016 | CW |
| Dibromochloromethane | <0.80 | 0.80 | 124-48-1 | <6.8 | 1/25/2016 | CW |
| 1,2-Dibromoethane | <0.80 | 0.80 | 106-93-4 | <6.1 | 1/25/2016 | CW |
| 1,4-Dichlorobenzene | <0.80 | 0.80 | 106-46-7 | <4.8 | 1/25/2016 | CW |
| 1,2-Dichlorobenzene | <0.80 | 0.80 | 95-50-1 | <4.8 | 1/25/2016 | CW |
| 1,3-Dichlorobenzene | <0.80 | 0.80 | 541-73-1 | <4.8 | 1/25/2016 | CW |
| Dichlorodifluoromethane | <0.80 | 0.80 | 75-71-8 | <4.0 | 1/25/2016 | CW |
| 1,1-Dichloroethane | <0.80 | 0.80 | 75-34-3 | <3.2 | 1/25/2016 | CW |
| 1,2-Dichloroethane | <0.80 | 0.80 | 107-06-2 | <3.2 | 1/25/2016 | CW |
| 1,1-Dichloroethylene | <0.80 | 0.80 | 75-35-4 | <3.2 | 1/25/2016 | CW |

**Brighton Analytical LLC**
2105 Pless Drive
Brighton, Michigan 48114
Phone: (810)229-7575 (810)229-8650
e-mail:bai-brighton@sbcglobal.net
MDNRE Certified #9404
NELAC Accredited #176507

Sample Date 1/13/2016
Submit Date 1/15/2016
Report Date: 1/28/2016

PM Environmental, Inc.
4080 W. 11 Mile Rd.
Berkley, MI 48072

BA Project # **37363**
BA Sample ID **CC04588**
Method **TO15**

Project Name: **B&B #8**
Project Number: **01-4982-0-005**
Sample ID: **SG-20**

| Analyte Name | ppbv Result | RL | CAS Number | ug/m3 Result | Date Analyzed | Analyst |
|---|---|---|---|---|---|---|
| **Volatile TO15 Analysis** | | | | | | |
| 1,2-Dichloropropane | <0.80 | 0.80 | 78-87-5 | <3.7 | 1/25/2016 | CW |
| Dichlorotetrafluoroethane(Freon114) | <0.80 | 0.80 | 76-14-2 | <5.6 | 1/25/2016 | CW |
| 1,4-Dioxane | <0.80 | 0.80 | 123-91-1 | <2.9 | 1/25/2016 | CW |
| Ethanol | <2.0 | 2.0 | 64-17-5 | <3.8 | 1/25/2016 | CW |
| Ethyl Acetate | <0.80 | 0.80 | 141-78-6 | <2.9 | 1/25/2016 | CW |
| Ethylbenzene | <0.80 | 0.80 | 100-41-4 | <3.5 | 1/25/2016 | CW |
| 4-Ethyltoluene | <0.80 | 0.80 | 622-96-8 | <3.9 | 1/25/2016 | CW |
| Heptane | <0.80 | 0.80 | 142-82-5 | <3.3 | 1/25/2016 | CW |
| Hexachlorobutadiene | <0.80 | 0.80 | 87-68-3 | <8.5 | 1/25/2016 | CW |
| Hexane | 8.2 | 0.80 | 110-54-3 | 29 | 1/25/2016 | CW |
| 2-Hexanone | <0.80 | 0.80 | 591-78-6 | <3.3 | 1/25/2016 | CW |
| Isopropyl Alcohol | <0.80 | 0.80 | 67-63-0 | <2.0 | 1/25/2016 | CW |
| Methyl ethyl ketone | <0.80 | 0.80 | 78-93-3 | <2.4 | 1/25/2016 | CW |
| Methyl Isobutyl Ketone | <0.80 | 0.80 | 108-10-1 | <3.3 | 1/25/2016 | CW |
| Methyl Tert Butyl Ether | <0.80 | 0.80 | 1634-04-4 | <2.9 | 1/25/2016 | CW |
| Methylene chloride | 92 | 0.80 | 75-09-2 | 320 | 1/25/2016 | CW |
| Methylmethacrylate | <0.80 | 0.80 | 80-62-6 | <3.3 | 1/25/2016 | CW |
| m,p-Xylene | 3.0 | 0.80 | 108-38-3/106-42-3 | 13 | 1/25/2016 | CW |
| Naphthalene | <0.80 | 0.80 | 91-20-3 | <4.2 | 1/25/2016 | CW |
| o-Xylene | 1.0 | 0.80 | 95-47-6 | 4.2 | 1/25/2016 | CW |
| Propylene | <2.0 | 2.0 | 115-07-1 | <3.4 | 1/25/2016 | CW |
| Styrene | <0.80 | 0.80 | 100-42-5 | <3.4 | 1/25/2016 | CW |
| Tertiary Butyl Alcohol | <0.80 | 0.80 | 75-65-0 | <2.4 | 1/25/2016 | CW |
| 1,1,2,2-Tetrachloroethane | <0.80 | 0.80 | 79-34-5 | <5.5 | 1/25/2016 | CW |
| Tetrachloroethylene | <0.16 | 0.16 | 127-18-4 | <1.1 | 1/25/2016 | CW |
| Tetrahydrofuran | <0.80 | 0.80 | 109-99-9 | <2.4 | 1/25/2016 | CW |
| Toluene | 3.6 | 0.80 | 108-88-3 | 14 | 1/25/2016 | CW |
| trans-1,2-Dichloroethylene | <0.80 | 0.80 | 156-60-5 | <3.2 | 1/25/2016 | CW |

**Brighton Analytical LLC**
2105 Pless Drive
Brighton, Michigan 48114
Phone: (810)229-7575 (810)229-8650
e-mail:bai-brighton@sbcglobal.net
MDNRE Certified #9404
NELAC Accredited #176507

Sample Date 1/13/2016
Submit Date 1/15/2016
Report Date: 1/28/2016

PM Environmental, Inc.
4080 W. 11 Mile Rd.
Berkley, MI 48072

BA Project # **37363**
BA Sample ID **CC04588**
Method **TO15**

Project Name: **B&B #8**
Project Number: **01-4982-0-005**
Sample ID: **SG-20**

| Analyte Name | ppbv Result | RL | CAS Number | ug/m3 Result | Date Analyzed | Analyst |
|---|---|---|---|---|---|---|
| **Volatile TO15 Analysis** | | | | | | |
| trans-1,3-Dichloropropene | <0.80 | 0.80 | 10061-02-6 | <3.6 | 1/25/2016 | CW |
| 1,2,4-Trichlorobenzene | <0.80 | 0.80 | 120-82-1 | <5.9 | 1/25/2016 | CW |
| 1,1,1-Trichloroethane | <0.80 | 0.80 | 71-55-6 | <4.4 | 1/25/2016 | CW |
| 1,1,2-Trichloroethane | <0.80 | 0.80 | 79-00-5 | <4.4 | 1/25/2016 | CW |
| Trichloroethylene | <0.16 | 0.16 | 79-01-6 | <0.86 | 1/25/2016 | CW |
| Trichlorofluoromethane | <0.80 | 0.80 | 75-69-4 | <4.5 | 1/25/2016 | CW |
| 1,1,2-Trichlorotrifluoroethane(Freon113) | <0.80 | 0.80 | 76-13-1 | <6.1 | 1/25/2016 | CW |
| 1,2,4-Trimethylbenzene | <0.80 | 0.80 | 95-63-6 | <3.9 | 1/25/2016 | CW |
| 1,3,5-Trimethylbenzene | <0.80 | 0.80 | 108-67-8 | <3.9 | 1/25/2016 | CW |
| 2,2,4-Trimethylpentane | <0.80 | 0.80 | 540-84-1 | <3.7 | 1/25/2016 | CW |
| Vinyl Acetate | <0.80 | 0.80 | 108-05-4 | <2.8 | 1/25/2016 | CW |
| Vinyl chloride | <0.80 | 0.80 | 75-01-4 | <2.0 | 1/25/2016 | CW |
| Xylenes(total) | 4.0 | 0.80 | 1330-20-7 | 17.2 | 1/25/2016 | CW |

RL=Reported detection limit for analytical method requested. Some compounds require special analytical methods to achieve MDNR designated target detection limits (TDL).

Released by UHood
Date 1/28/16

**Brighton Analytical LLC**
2105 Pless Drive
Brighton, Michigan 48114
Phone: (810)229-7575 (810)229-8650
e-mail:bai-brighton@sbcglobal.net
MDNRE Certified #9404
NELAC Accredited #176507

Sample Date 1/13/2016
Submit Date 1/15/2016
Report Date: 1/28/2016

PM Environmental, Inc.
4080 W. 11 Mile Rd.
Berkley, MI 48072

BA Project # **37363**
BA Sample ID **CC04589**
Method **TO15**

Project Name: **B&B #8**
Project Number: **01-4982-0-005**
Sample ID: **SG-17**

| Analyte Name | ppbv Result | RL | CAS Number | ug/m3 Result | Date Analyzed | Analyst |
|---|---|---|---|---|---|---|
| **Volatile TO15 Analysis** | | | | | | |
| Acetone | 410 | 40 | 67-64-1 | 970 | 1/25/2016 | CW |
| Benzene | 450 | 40 | 71-43-2 | 1400 | 1/25/2016 | CW |
| Benzyl Chloride | <40 | 40 | 100-44-7 | <205 | 1/25/2016 | CW |
| Bromodichloromethane | <40 | 40 | 75-27-4 | <170 | 1/25/2016 | CW |
| Bromoethene | <40 | 40 | 593-60-2 | <175 | 1/25/2016 | CW |
| Bromoform | <40 | 40 | 75-25-2 | <415 | 1/25/2016 | CW |
| Bromomethane | <40 | 40 | 74-83-9 | <155 | 1/25/2016 | CW |
| 1,3-Butadiene | <40 | 40 | 106-99-0 | <90 | 1/25/2016 | CW |
| Carbon disulfide | <40 | 40 | 75-15-0 | <125 | 1/25/2016 | CW |
| Carbon tetrachloride | <40 | 40 | 56-23-5 | <150 | 1/25/2016 | CW |
| Chlorobenzene | <40 | 40 | 108-90-7 | <185 | 1/25/2016 | CW |
| Chloroethane | <40 | 40 | 75-00-3 | <105 | 1/25/2016 | CW |
| Chloroform | <40 | 40 | 67-66-3 | <195 | 1/25/2016 | CW |
| Chloromethane | <40 | 40 | 74-87-3 | <85 | 1/25/2016 | CW |
| 3-Chloropropene | <40 | 40 | 107-05-1 | <125 | 1/25/2016 | CW |
| 2-Chlorotoluene | <40 | 40 | 95-49-8 | <205 | 1/25/2016 | CW |
| cis-1,2-Dichloroethylene | <40 | 40 | 156-59-2 | <160 | 1/25/2016 | CW |
| cis-1,3-Dichloropropene | <40 | 40 | 10061-01-5 | <180 | 1/25/2016 | CW |
| Cyclohexane | 430 | 40 | 110-82-7 | 1500 | 1/25/2016 | CW |
| Dibromochloromethane | <40 | 40 | 124-48-1 | <340 | 1/25/2016 | CW |
| 1,2-Dibromoethane | <40 | 40 | 106-93-4 | <305 | 1/25/2016 | CW |
| 1,2-Dichlorobenzene | <40 | 40 | 95-50-1 | <240 | 1/25/2016 | CW |
| 1,4-Dichlorobenzene | <40 | 40 | 106-46-7 | <240 | 1/25/2016 | CW |
| 1,3-Dichlorobenzene | <40 | 40 | 541-73-1 | <240 | 1/25/2016 | CW |
| Dichlorodifluoromethane | <40 | 40 | 75-71-8 | <200 | 1/25/2016 | CW |
| 1,2-Dichloroethane | <40 | 40 | 107-06-2 | <160 | 1/25/2016 | CW |
| 1,1-Dichloroethane | <40 | 40 | 75-34-3 | <160 | 1/25/2016 | CW |
| 1,1-Dichloroethylene | <40 | 40 | 75-35-4 | <160 | 1/25/2016 | CW |

**Brighton Analytical LLC**
2105 Pless Drive
Brighton, Michigan 48114
Phone: (810)229-7575 (810)229-8650
e-mail:bai-brighton@sbcglobal.net
MDNRE Certified #9404
NELAC Accredited #176507

Sample Date 1/13/2016
Submit Date 1/15/2016
Report Date: 1/28/2016

PM Environmental, Inc.
4080 W. 11 Mile Rd.
Berkley, MI 48072

BA Project # **37363**
BA Sample ID **CC04589**
Method **TO15**

Project Name: **B&B #8**
Project Number: **01-4982-0-005**
Sample ID: **SG-17**

| Analyte Name | ppbv Result | RL | CAS Number | ug/m3 Result | Date Analyzed | Analyst |
|---|---|---|---|---|---|---|
| **Volatile TO15 Analysis** | | | | | | |
| 1,2-Dichloropropane | <40 | 40 | 78-87-5 | <185 | 1/25/2016 | CW |
| Dichlorotetrafluoroethane(Freon114) | <40 | 40 | 76-14-2 | <280 | 1/25/2016 | CW |
| 1,4-Dioxane | <40 | 40 | 123-91-1 | <145 | 1/25/2016 | CW |
| Ethanol | <100 | 100 | 64-17-5 | <190 | 1/25/2016 | CW |
| Ethyl Acetate | <40 | 40 | 141-78-6 | <145 | 1/25/2016 | CW |
| Ethylbenzene | 6100 | 40 | 100-41-4 | 26000 | 1/25/2016 | CW |
| 4-Ethyltoluene | <40 | 40 | 622-96-8 | <195 | 1/25/2016 | CW |
| Heptane | <40 | 40 | 142-82-5 | <165 | 1/25/2016 | CW |
| Hexachlorobutadiene | <40 | 40 | 87-68-3 | <425 | 1/25/2016 | CW |
| Hexane | 160 | 40 | 110-54-3 | 550 | 1/25/2016 | CW |
| 2-Hexanone | <40 | 40 | 591-78-6 | <165 | 1/25/2016 | CW |
| Isopropyl Alcohol | <40 | 40 | 67-63-0 | <100 | 1/25/2016 | CW |
| Methyl ethyl ketone | <40 | 40 | 78-93-3 | <120 | 1/25/2016 | CW |
| Methyl Isobutyl Ketone | <40 | 40 | 108-10-1 | <165 | 1/25/2016 | CW |
| Methyl Tert Butyl Ether | <40 | 40 | 1634-04-4 | <145 | 1/25/2016 | CW |
| Methylene chloride | <40 | 40 | 75-09-2 | <140 | 1/25/2016 | CW |
| Methylmethacrylate | <40 | 40 | 80-62-6 | <165 | 1/25/2016 | CW |
| m,p-Xylene | 19000* | 40 | 108-38-3/106-42-3 | 82000* | 1/25/2016 | CW |
| Naphthalene | <40 | 40 | 91-20-3 | <210 | 1/25/2016 | CW |
| o-Xylene | 6000* | 40 | 95-47-6 | 26000* | 1/25/2016 | CW |
| Propylene | <100 | 100 | 115-07-1 | <170 | 1/25/2016 | CW |
| Styrene | <40 | 40 | 100-42-5 | <170 | 1/25/2016 | CW |
| Tertiary Butyl Alcohol | <40 | 40 | 75-65-0 | <120 | 1/25/2016 | CW |
| 1,1,2,2-Tetrachloroethane | <40 | 40 | 79-34-5 | <275 | 1/25/2016 | CW |
| Tetrachloroethylene | <8.0 | 8.0 | 127-18-4 | <55 | 1/25/2016 | CW |
| Tetrahydrofuran | <40 | 40 | 109-99-9 | <120 | 1/25/2016 | CW |
| Toluene | 62 | 40 | 108-88-3 | 230 | 1/25/2016 | CW |
| trans-1,2-Dichloroethylene | <40 | 40 | 156-60-5 | <160 | 1/25/2016 | CW |

**Brighton Analytical LLC**
2105 Pless Drive
Brighton, Michigan 48114
Phone: (810)229-7575 (810)229-8650
e-mail:bai-brighton@sbcglobal.net
MDNRE Certified #9404
NELAC Accredited #176507

Sample Date 1/13/2016
Submit Date 1/15/2016
Report Date: 1/28/2016

PM Environmental, Inc.
4080 W. 11 Mile Rd.
Berkley, MI 48072

BA Project # **37363**
BA Sample ID **CC04589**
Method **TO15**

Project Name: **B&B #8**
Project Number: **01-4982-0-005**
Sample ID: **SG-17**

| Analyte Name | ppbv Result | RL | CAS Number | ug/m3 Result | Date Analyzed | Analyst |
|---|---|---|---|---|---|---|
| **Volatile TO15 Analysis** | | | | | | |
| trans-1,3-Dichloropropene | <40 | 40 | 10061-02-6 | <180 | 1/25/2016 | CW |
| 1,2,4-Trichlorobenzene | <40 | 40 | 120-82-1 | <295 | 1/25/2016 | CW |
| 1,1,2-Trichloroethane | <40 | 40 | 79-00-5 | <220 | 1/25/2016 | CW |
| 1,1,1-Trichloroethane | <40 | 40 | 71-55-6 | <220 | 1/25/2016 | CW |
| Trichloroethylene | <8.0 | 8.0 | 79-01-6 | <43 | 1/25/2016 | CW |
| Trichlorofluoromethane | <40 | 40 | 75-69-4 | <225 | 1/25/2016 | CW |
| 1,1,2-Trichlorotrifluoroethane(Freon113) | <40 | 40 | 76-13-1 | <305 | 1/25/2016 | CW |
| 1,2,4-Trimethylbenzene | <40 | 40 | 95-63-6 | <195 | 1/25/2016 | CW |
| 1,3,5-Trimethylbenzene | <40 | 40 | 108-67-8 | <195 | 1/25/2016 | CW |
| 2,2,4-Trimethylpentane | <40 | 40 | 540-84-1 | <185 | 1/25/2016 | CW |
| Vinyl Acetate | <40 | 40 | 108-05-4 | <140 | 1/25/2016 | CW |
| Vinyl chloride | <40 | 40 | 75-01-4 | <100 | 1/25/2016 | CW |
| Xylenes(total) | 25000* | 40 | 1330-20-7 | 108000* | 1/25/2016 | CW |

RL=Reported detection limit for analytical method requested. Some compounds require special analytical methods to achieve MDNR designated target detection limits (TDL).

Elevated volatile dl due to sample matrix.
*Over range of curve

Released by _____
Date 1/28/16

**Brighton Analytical LLC**
2105 Pless Drive
Brighton, Michigan 48114
Phone: (810)229-7575 (810)229-8650
e-mail:bai-brighton@sbcglobal.net
MDNRE Certified #9404
NELAC Accredited #176507

Sample Date 1/13/2016
Submit Date 1/15/2016
Report Date: 1/28/2016

PM Environmental, Inc.
4080 W. 11 Mile Rd.
Berkley, MI 48072

BA Project # **37363**
BA Sample ID **CC04590**
Method **TO15**

Project Name: **B&B #8**
Project Number: **01-4982-0-005**
Sample ID: **SG-16**

| Analyte Name | ppbv Result | RL | CAS Number | ug/m3 Result | Date Analyzed | Analyst |
|---|---|---|---|---|---|---|
| **Volatile TO15 Analysis** | | | | | | |
| Acetone | 330 | 40 | 67-64-1 | 780 | 1/25/2016 | CW |
| Benzene | <40 | 40 | 71-43-2 | <130 | 1/25/2016 | CW |
| Benzyl Chloride | <40 | 40 | 100-44-7 | <205 | 1/25/2016 | CW |
| Bromodichloromethane | <40 | 40 | 75-27-4 | <170 | 1/25/2016 | CW |
| Bromoethene | <40 | 40 | 593-60-2 | <175 | 1/25/2016 | CW |
| Bromoform | <40 | 40 | 75-25-2 | <415 | 1/25/2016 | CW |
| Bromomethane | <40 | 40 | 74-83-9 | <155 | 1/25/2016 | CW |
| 1,3-Butadiene | <40 | 40 | 106-99-0 | <90 | 1/25/2016 | CW |
| Carbon disulfide | <40 | 40 | 75-15-0 | <125 | 1/25/2016 | CW |
| Carbon tetrachloride | <40 | 40 | 56-23-5 | <150 | 1/25/2016 | CW |
| Chlorobenzene | <40 | 40 | 108-90-7 | <185 | 1/25/2016 | CW |
| Chloroethane | <40 | 40 | 75-00-3 | <105 | 1/25/2016 | CW |
| Chloroform | <40 | 40 | 67-66-3 | <195 | 1/25/2016 | CW |
| Chloromethane | <40 | 40 | 74-87-3 | <85 | 1/25/2016 | CW |
| 3-Chloropropene | <40 | 40 | 107-05-1 | <125 | 1/25/2016 | CW |
| 2-Chlorotoluene | <40 | 40 | 95-49-8 | <205 | 1/25/2016 | CW |
| cis-1,2-Dichloroethylene | <40 | 40 | 156-59-2 | <160 | 1/25/2016 | CW |
| cis-1,3-Dichloropropene | <40 | 40 | 10061-01-5 | <180 | 1/25/2016 | CW |
| Cyclohexane | <40 | 40 | 110-82-7 | <140 | 1/25/2016 | CW |
| Dibromochloromethane | <40 | 40 | 124-48-1 | <340 | 1/25/2016 | CW |
| 1,2-Dibromoethane | <40 | 40 | 106-93-4 | <305 | 1/25/2016 | CW |
| 1,3-Dichlorobenzene | <40 | 40 | 541-73-1 | <240 | 1/25/2016 | CW |
| 1,4-Dichlorobenzene | <40 | 40 | 106-46-7 | <240 | 1/25/2016 | CW |
| 1,2-Dichlorobenzene | <40 | 40 | 95-50-1 | <240 | 1/25/2016 | CW |
| Dichlorodifluoromethane | <40 | 40 | 75-71-8 | <200 | 1/25/2016 | CW |
| 1,1-Dichloroethane | <40 | 40 | 75-34-3 | <160 | 1/25/2016 | CW |
| 1,2-Dichloroethane | <40 | 40 | 107-06-2 | <160 | 1/25/2016 | CW |
| 1,1-Dichloroethylene | <40 | 40 | 75-35-4 | <160 | 1/25/2016 | CW |

**Brighton Analytical LLC**
2105 Pless Drive
Brighton, Michigan 48114
Phone: (810)229-7575 (810)229-8650
e-mail:bai-brighton@sbcglobal.net
MDNRE Certified #9404
NELAC Accredited #176507

Sample Date 1/13/2016
Submit Date 1/15/2016
Report Date: 1/28/2016

PM Environmental, Inc.
4080 W. 11 Mile Rd.
Berkley, MI 48072

BA Project # **37363**
BA Sample ID **CC04590**
Method **TO15**

Project Name: **B&B #8**
Project Number: **01-4982-0-005**
Sample ID: **SG-16**

| Analyte Name | ppbv Result | RL | CAS Number | ug/m3 Result | Date Analyzed | Analyst |
|---|---|---|---|---|---|---|
| **Volatile TO15 Analysis** | | | | | | |
| 1,2-Dichloropropane | <40 | 40 | 78-87-5 | <185 | 1/25/2016 | CW |
| Dichlorotetrafluoroethane(Freon114) | <40 | 40 | 76-14-2 | <280 | 1/25/2016 | CW |
| 1,4-Dioxane | <40 | 40 | 123-91-1 | <145 | 1/25/2016 | CW |
| Ethanol | <100 | 100 | 64-17-5 | <190 | 1/25/2016 | CW |
| Ethyl Acetate | <40 | 40 | 141-78-6 | <145 | 1/25/2016 | CW |
| Ethylbenzene | 1000 | 40 | 100-41-4 | 4400 | 1/25/2016 | CW |
| 4-Ethyltoluene | <40 | 40 | 622-96-8 | <195 | 1/25/2016 | CW |
| Heptane | <40 | 40 | 142-82-5 | <165 | 1/25/2016 | CW |
| Hexachlorobutadiene | <40 | 40 | 87-68-3 | <425 | 1/25/2016 | CW |
| Hexane | <40 | 40 | 110-54-3 | <140 | 1/25/2016 | CW |
| 2-Hexanone | <40 | 40 | 591-78-6 | <165 | 1/25/2016 | CW |
| Isopropyl Alcohol | <40 | 40 | 67-63-0 | <100 | 1/25/2016 | CW |
| Methyl ethyl ketone | <40 | 40 | 78-93-3 | <120 | 1/25/2016 | CW |
| Methyl Isobutyl Ketone | <40 | 40 | 108-10-1 | <165 | 1/25/2016 | CW |
| Methyl Tert Butyl Ether | <40 | 40 | 1634-04-4 | <145 | 1/25/2016 | CW |
| Methylene chloride | <40 | 40 | 75-09-2 | <140 | 1/25/2016 | CW |
| Methylmethacrylate | <40 | 40 | 80-62-6 | <165 | 1/25/2016 | CW |
| m,p-Xylene | 4800* | 40 | 108-38-3/106-42-3 | 21000* | 1/25/2016 | CW |
| Naphthalene | <40 | 40 | 91-20-3 | <210 | 1/25/2016 | CW |
| o-Xylene | 2100 | 40 | 95-47-6 | 9100 | 1/25/2016 | CW |
| Propylene | <100 | 100 | 115-07-1 | <170 | 1/25/2016 | CW |
| Styrene | <40 | 40 | 100-42-5 | <170 | 1/25/2016 | CW |
| Tertiary Butyl Alcohol | <40 | 40 | 75-65-0 | <120 | 1/25/2016 | CW |
| 1,1,2,2-Tetrachloroethane | <40 | 40 | 79-34-5 | <275 | 1/25/2016 | CW |
| Tetrachloroethylene | <8.0 | 8.0 | 127-18-4 | <55 | 1/25/2016 | CW |
| Tetrahydrofuran | <40 | 40 | 109-99-9 | <120 | 1/25/2016 | CW |
| Toluene | <40 | 40 | 108-88-3 | <150 | 1/25/2016 | CW |
| trans-1,2-Dichloroethylene | <40 | 40 | 156-60-5 | <160 | 1/25/2016 | CW |

**Brighton Analytical LLC**
2105 Pless Drive
Brighton, Michigan 48114
Phone: (810)229-7575 (810)229-8650
e-mail:bai-brighton@sbcglobal.net
MDNRE Certified #9404
NELAC Accredited #176507

Sample Date 1/13/2016
Submit Date 1/15/2016
Report Date: 1/28/2016

PM Environmental, Inc.
4080 W. 11 Mile Rd.
Berkley, MI 48072

BA Project # **37363**
BA Sample ID **CC04590**
Method **TO15**

Project Name: **B&B #8**
Project Number: **01-4982-0-005**
Sample ID: **SG-16**

| Analyte Name | ppbv Result | RL | CAS Number | ug/m3 Result | Date Analyzed | Analyst |
|---|---|---|---|---|---|---|
| **Volatile TO15 Analysis** | | | | | | |
| trans-1,3-Dichloropropene | <40 | 40 | 10061-02-6 | <180 | 1/25/2016 | CW |
| 1,2,4-Trichlorobenzene | <40 | 40 | 120-82-1 | <295 | 1/25/2016 | CW |
| 1,1,2-Trichloroethane | <40 | 40 | 79-00-5 | <220 | 1/25/2016 | CW |
| 1,1,1-Trichloroethane | <40 | 40 | 71-55-6 | <220 | 1/25/2016 | CW |
| Trichloroethylene | <8.0 | 8.0 | 79-01-6 | <43 | 1/25/2016 | CW |
| Trichlorofluoromethane | <40 | 40 | 75-69-4 | <225 | 1/25/2016 | CW |
| 1,1,2-Trichlorotrifluoroethane(Freon113) | <40 | 40 | 76-13-1 | <305 | 1/25/2016 | CW |
| 1,2,4-Trimethylbenzene | <40 | 40 | 95-63-6 | <195 | 1/25/2016 | CW |
| 1,3,5-Trimethylbenzene | <40 | 40 | 108-67-8 | <195 | 1/25/2016 | CW |
| 2,2,4-Trimethylpentane | <40 | 40 | 540-84-1 | <185 | 1/25/2016 | CW |
| Vinyl Acetate | <40 | 40 | 108-05-4 | <140 | 1/25/2016 | CW |
| Vinyl chloride | <40 | 40 | 75-01-4 | <100 | 1/25/2016 | CW |
| Xylenes(total) | 6900 | 40 | 1330-20-7 | 30100 | 1/25/2016 | CW |

RL=Reported detection limit for analytical method requested. Some compounds require special analytical methods to achieve MDNR designated target detection limits (TDL).

Elevated volatile dl due to sample matrix.
*Over range of curve

Released by _____
Date 1/28/16

Brighton Analytical L.L.C.™
2105 Pless Drive · Brighton, Michigan 48114 · Phone (810) 229-7575 · Fax (810) 229-8650 · E-mail bal-brighton@sbcglobal.net

January 28, 2016

PM Environmental, Inc.
4080 W. 11 Mile Rd.
Berkley, MI 48072

Subject: Beacon & Bridge #8
01-4982-0

Dear Ms. Santiago :

Thank you for making Brighton Analytical, L.L.C. your laboratory of choice. Attached are the results for the samples submitted on 01/26/2016 for the above mentioned project. NELAP/TNI Accredited Analysis and MDEQ Drinking Water Certified Analysis will be identified in their respective reporting formats. Hard copies can be supplied at your request for a fee of $20.00 per copy.

The invoice for this project will be emailed separately. If you have any questions concerning the data or invoice, please don't hesitate to contact our office. We welcome your comments and suggestions to improve our quality systems. Please reference Brighton Analytical, L.L.C. Project ID 37468 when calling or emailing. We thank you for this opportunity to partner with you on this project and hope to work with you again in the future.

Sincerely,
Brighton Analytical, L.L.C.

NELAP ACCREDITED LABORATORY TNI
Certified WBENC Women's Business Enterprise

**Brighton Analytical, L.L.C.™**
Email: bai-brighton@sbcglobal.net
2105 Pless Drive
Brighton, MI 48114
Phone: 810-229-7575
Fax: 810-229-8650

BA PROJECT #: 37468

PAGE 1 OF 1

**ABBREVIATIONS FOR MATRIX**
S = Solid
L = Liquid
DW = Drinking $H_2O$
O = Oil
P = Wipe
A = Air (Tedlar Bag)
F = Filter
T = Tube
M = Misc.

PROJECT NAME: Beaver Bridge #8

PROJECT #: 01-4982-0

PO #: (PLEASE NOTE IF DIFFERENT BILLING ADDRESS)

Sample collected by: Tom Dawda

**REQUESTED TURNAROUND:** (circle one)
Rush: 1-3 business days (verify with lab & specify date needed)
1 Day = 2.5X Cost 2 Day = 2X Cost 3 Day = 1.5X Cost
Standard: 5 business days

If RUSH, approved by: _____

**Container Type & Quantity**

| Brighton ID # | Sample Description | Sample Coll. Date | Sample Coll. Time | VOA'S (PRES) Y N N/A | HDPE UNPRESERVED | 1L Juan | HDPE $H_2SO_4$ | HDPE NAOH | AMBER PRESERVED? | GLASS, NO PRESERVATIVE | STERILIZED BACTERIA | MEOH Preserved Y N | Sample Matrix | TC:15 | | | | | | | |
|---|---|---|---|---|---|---|---|---|---|---|---|---|---|---|---|---|---|---|---|---|---|
| 1) CCS5012 | SG-18 | 1-26-16 | 10:42 | | | 1 | | | | | | | A | X | | | | | | | |
| 2) | | | | | | | | | | | | | | | | | | | | | |
| 3) | | | | | | | | | | | | | | | | | | | | | |
| 4) | | | | | | | | | | | | | | | | | | | | | |
| 5) | | | | | | | | | | | | | | | | | | | | | |
| 6) | | | | | | | | | | | | | | | | | | | | | |
| 7) | | | | | | | | | | | | | | | | | | | | | |
| 8) | | | | | | | | | | | | | | | | | | | | | |
| 9) | | | | | | | | | | | | | | | | | | | | | |
| 10) | | | | | | | | | | | | | | | | | | | | | |

**Analysis Requested/Method**

**COMPANY/MAILING ADDRESS:** PM Berkley

ATTN: Cristina Santiago

PHONE:

FAX OR EMAIL: Santiago@PMENV.COM

Samples received within hold time? yes ☒ no ☐

Temperature of samples °C:

pHs verified in login? yes ☐ no ☒

Headspace/bubbles in VOA's? yes ☐ no ☐ n/a ☒

Sample containers and COC match? yes ☒ no ☐

**BILLING ADDRESS (IF REQUIRED):**

**Drinking $H_2O$:**
Fax to LCHD? yes ☐ no ☐
Chlorinated Water Supply? yes ☐ no ☐
AMT.: _____

MCL Failure: yes ☐ no ☐
Client Notified (date/time/initials): _____

**Special Instructions:**

*Please fill out the Chain of Custody completely and review. Incorrect or incomplete information will result in a "hold" on all analyses.*

| Trans. # | RELINQUISHED BY: | RECEIVED BY: | DATE: | TIME: | Trans. # | RELINQUISHED BY: | RECEIVED BY: | DATE: | TIME: |
|---|---|---|---|---|---|---|---|---|---|
| 1 | Tom Dawda | [signature] | 1-26-16 | 11:35 pm | 3 | | | | |
| 2 | | | | | 4 | | | | |

**Brighton Analytical LLC**
2105 Pless Drive
Brighton, Michigan 48114
Phone: (810)229-7575 (810)229-8650
e-mail:bai-brighton@sbcglobal.net
MDNRE Certified #9404
NELAC Accredited #176507

Sample Date 1/26/2016
Submit Date 1/26/2016
Report Date: 1/28/2016

PM Environmental, Inc.
4080 W. 11 Mile Rd.
Berkley, MI 48072

BA Project # **37468**
BA Sample ID **CC05012**
Method **TO15**

Project Name: **Beacon & Bridge #8**
Project Number: **01-4982-0**
Sample ID: **SG-18**

| Analyte Name | ppbv Result | RL | CAS Number | ug/m3 Result | Date Analyzed | Analyst |
|---|---|---|---|---|---|---|
| **Volatile TO15 Analysis** | | | | | | |
| Acetone | 14 | 0.80 | 67-64-1 | 34 | 1/27/2016 | CW |
| Benzene | <0.80 | 0.80 | 71-43-2 | <2.6 | 1/27/2016 | CW |
| Benzyl Chloride | <0.80 | 0.80 | 100-44-7 | <4.1 | 1/27/2016 | CW |
| Bromodichloromethane | <0.80 | 0.80 | 75-27-4 | <5.4 | 1/27/2016 | CW |
| Bromoethene | <0.80 | 0.80 | 593-60-2 | <3.5 | 1/27/2016 | CW |
| Bromoform | <0.80 | 0.80 | 75-25-2 | <8.3 | 1/27/2016 | CW |
| Bromomethane | <0.80 | 0.80 | 74-83-9 | <3.1 | 1/27/2016 | CW |
| 1,3-Butadiene | <0.80 | 0.80 | 106-99-0 | <1.8 | 1/27/2016 | CW |
| Carbon disulfide | <0.80 | 0.80 | 75-15-0 | <2.5 | 1/27/2016 | CW |
| Carbon tetrachloride | <0.80 | 0.80 | 56-23-5 | <5.0 | 1/27/2016 | CW |
| Chlorobenzene | <0.80 | 0.80 | 108-90-7 | <3.7 | 1/27/2016 | CW |
| Chloroethane | <0.80 | 0.80 | 75-00-3 | <2.1 | 1/27/2016 | CW |
| Chloroform | <0.80 | 0.80 | 67-66-3 | <3.9 | 1/27/2016 | CW |
| Chloromethane | <0.80 | 0.80 | 74-87-3 | <1.7 | 1/27/2016 | CW |
| 3-Chloropropene | <0.80 | 0.80 | 107-05-1 | <2.5 | 1/27/2016 | CW |
| 2-Chlorotoluene | <0.80 | 0.80 | 95-49-8 | <4.1 | 1/27/2016 | CW |
| cis-1,2-Dichloroethylene | <0.80 | 0.80 | 156-59-2 | <3.2 | 1/27/2016 | CW |
| cis-1,3-Dichloropropene | <0.80 | 0.80 | 10061-01-5 | <3.6 | 1/27/2016 | CW |
| Cyclohexane | <0.80 | 0.80 | 110-82-7 | <2.8 | 1/27/2016 | CW |
| Dibromochloromethane | <0.80 | 0.80 | 124-48-1 | <6.8 | 1/27/2016 | CW |
| 1,2-Dibromoethane | <0.80 | 0.80 | 106-93-4 | <6.1 | 1/27/2016 | CW |
| 1,4-Dichlorobenzene | <0.80 | 0.80 | 106-46-7 | <4.8 | 1/27/2016 | CW |
| 1,2-Dichlorobenzene | <0.80 | 0.80 | 95-50-1 | <4.8 | 1/27/2016 | CW |
| 1,3-Dichlorobenzene | 3.3 | 0.80 | 541-73-1 | 20 | 1/27/2016 | CW |
| Dichlorodifluoromethane | <0.80 | 0.80 | 75-71-8 | <4.0 | 1/27/2016 | CW |
| 1,2-Dichloroethane | <0.80 | 0.80 | 107-06-2 | <3.2 | 1/27/2016 | CW |
| 1,1-Dichloroethane | <0.80 | 0.80 | 75-34-3 | <3.2 | 1/27/2016 | CW |
| 1,1-Dichloroethylene | <0.80 | 0.80 | 75-35-4 | <3.2 | 1/27/2016 | CW |

**Brighton Analytical LLC**
2105 Pless Drive
Brighton, Michigan 48114
Phone: (810)229-7575 (810)229-8650
e-mail:bai-brighton@sbcglobal.net
MDNRE Certified #9404
NELAC Accredited #176507

Sample Date 1/26/2016
Submit Date 1/26/2016
Report Date: 1/28/2016

PM Environmental, Inc.
4080 W. 11 Mile Rd.
Berkley, MI 48072

BA Project # **37468**
BA Sample ID **CC05012**
Method **TO15**

Project Name: **Beacon & Bridge #8**
Project Number: **01-4982-0**
Sample ID: **SG-18**

| Analyte Name | ppbv Result | RL | CAS Number | ug/m3 Result | Date Analyzed | Analyst |
|---|---|---|---|---|---|---|
| **Volatile TO15 Analysis** | | | | | | |
| 1,2-Dichloropropane | <0.80 | 0.80 | 78-87-5 | <3.7 | 1/27/2016 | CW |
| Dichlorotetrafluoroethane(Freon114) | <0.80 | 0.80 | 76-14-2 | <5.6 | 1/27/2016 | CW |
| 1,4-Dioxane | <0.80 | 0.80 | 123-91-1 | <2.9 | 1/27/2016 | CW |
| Ethanol | <2.0 | 2.0 | 64-17-5 | <3.8 | 1/27/2016 | CW |
| Ethyl Acetate | <0.80 | 0.80 | 141-78-6 | <2.9 | 1/27/2016 | CW |
| Ethylbenzene | 2.3 | 0.80 | 100-41-4 | 10 | 1/27/2016 | CW |
| 4-Ethyltoluene | <0.80 | 0.80 | 622-96-8 | <3.9 | 1/27/2016 | CW |
| Heptane | <0.80 | 0.80 | 142-82-5 | <3.3 | 1/27/2016 | CW |
| Hexachlorobutadiene | <0.80 | 0.80 | 87-68-3 | <8.5 | 1/27/2016 | CW |
| Hexane | <0.80 | 0.80 | 110-54-3 | <2.8 | 1/27/2016 | CW |
| 2-Hexanone | <0.80 | 0.80 | 591-78-6 | <3.3 | 1/27/2016 | CW |
| Isopropyl Alcohol | <0.80 | 0.80 | 67-63-0 | <2.0 | 1/27/2016 | CW |
| Methyl ethyl ketone | 77 | 0.80 | 78-93-3 | 230 | 1/27/2016 | CW |
| Methyl Isobutyl Ketone | <0.80 | 0.80 | 108-10-1 | <3.3 | 1/27/2016 | CW |
| Methyl Tert Butyl Ether | <0.80 | 0.80 | 1634-04-4 | <2.9 | 1/27/2016 | CW |
| Methylene chloride | <0.80 | 0.80 | 75-09-2 | <2.8 | 1/27/2016 | CW |
| Methylmethacrylate | <0.80 | 0.80 | 80-62-6 | <3.3 | 1/27/2016 | CW |
| m,p-Xylene | 10 | 0.80 | 108-38-3/106-42-3 | 44 | 1/27/2016 | CW |
| Naphthalene | <0.80 | 0.80 | 91-20-3 | <4.2 | 1/27/2016 | CW |
| o-Xylene | 3.1 | 0.80 | 95-47-6 | 14 | 1/27/2016 | CW |
| Propylene | <2.0 | 2.0 | 115-07-1 | <3.4 | 1/27/2016 | CW |
| Styrene | <0.80 | 0.80 | 100-42-5 | <3.4 | 1/27/2016 | CW |
| Tertiary Butyl Alcohol | <0.80 | 0.80 | 75-65-0 | <2.4 | 1/27/2016 | CW |
| 1,1,2,2-Tetrachloroethane | <0.80 | 0.80 | 79-34-5 | <5.5 | 1/27/2016 | CW |
| Tetrachloroethylene | 10 | 0.16 | 127-18-4 | 68 | 1/27/2016 | CW |
| Tetrahydrofuran | <0.80 | 0.80 | 109-99-9 | <2.4 | 1/27/2016 | CW |
| Toluene | 6.8 | 0.80 | 108-88-3 | 26 | 1/27/2016 | CW |
| trans-1,2-Dichloroethylene | <0.80 | 0.80 | 156-60-5 | <3.2 | 1/27/2016 | CW |

**Brighton Analytical LLC**
2105 Pless Drive
Brighton, Michigan 48114
Phone: (810)229-7575 (810)229-8650
e-mail:bai-brighton@sbcglobal.net
MDNRE Certified #9404
NELAC Accredited #176507

Sample Date 1/26/2016
Submit Date 1/26/2016
Report Date: 1/28/2016

PM Environmental, Inc.
4080 W. 11 Mile Rd.
Berkley, MI 48072

BA Project # **37468**
BA Sample ID **CC05012**
Method **TO15**

Project Name: **Beacon & Bridge #8**
Project Number: **01-4982-0**
Sample ID: **SG-18**

| Analyte Name | ppbv Result | RL | CAS Number | ug/m3 Result | Date Analyzed | Analyst |
|---|---|---|---|---|---|---|
| **Volatile TO15 Analysis** | | | | | | |
| trans-1,3-Dichloropropene | <0.80 | 0.80 | 10061-02-6 | <3.6 | 1/27/2016 | CW |
| 1,2,4-Trichlorobenzene | <0.80 | 0.80 | 120-82-1 | <5.9 | 1/27/2016 | CW |
| 1,1,1-Trichloroethane | <0.80 | 0.80 | 71-55-6 | <4.4 | 1/27/2016 | CW |
| 1,1,2-Trichloroethane | <0.80 | 0.80 | 79-00-5 | <4.4 | 1/27/2016 | CW |
| Trichloroethylene | <0.16 | 0.16 | 79-01-6 | <0.86 | 1/27/2016 | CW |
| Trichlorofluoromethane | <0.80 | 0.80 | 75-69-4 | <4.5 | 1/27/2016 | CW |
| 1,1,2-Trichlorotrifluoroethane(Freon113) | <0.80 | 0.80 | 76-13-1 | <6.1 | 1/27/2016 | CW |
| 1,3,5-Trimethylbenzene | <0.80 | 0.80 | 108-67-8 | <3.9 | 1/27/2016 | CW |
| 1,2,4-Trimethylbenzene | 2.5 | 0.80 | 95-63-6 | 12 | 1/27/2016 | CW |
| 2,2,4-Trimethylpentane | <0.80 | 0.80 | 540-84-1 | <3.7 | 1/27/2016 | CW |
| Vinyl Acetate | <0.80 | 0.80 | 108-05-4 | <2.8 | 1/27/2016 | CW |
| Vinyl chloride | <0.80 | 0.80 | 75-01-4 | <2.0 | 1/27/2016 | CW |
| Xylenes(total) | 13.1 | 0.80 | 1330-20-7 | 58 | 1/27/2016 | CW |

RL=Reported detection limit for analytical method requested. Some compounds require special analytical methods to achieve MDNR designated target detection limits (TDL).

Released by _____
Date 1/28/16

Brighton Analytical L.L.C.

COC ADDENDA

DATE 1-14-16

COMPANY PAA

CONTAINER AND SERIAL # 1 L Summa J1895 w 5min sampler

CONTAINER CLEANED 8-11-15 SIGNED [illegible]

VACUUM OUT 28" Hg 1-14-16 SIGNED [illegible]

SAMPLE DATE/REPRESENTATIVE 1-26-16

PROJECT NAME/NUMBER 01-4982

| SAMPLE ID | TIME START | TIME END | VACUUM START | VACUUM END | VOLUME | FLOW RATE |
|---|---|---|---|---|---|---|
| SG-18 | 10:42 | 10:47 | 27 | 5 | | |

CCO

Lab ID 5012 Lab Project #

Date Analyzed Temp/Pressure Tube ID

Volume Calcualtion

Tank Dilution

Tube Dilution

Brighton Analytical L.L.C.
2105 Pless Drive · Brighton, Michigan 48114 · Phone (810) 229-7575 · Fax (810) 229-8650 · E-mail bai-brighton@sbcglobal.net

January 20, 2016

PM Environmental, Inc.
4080 W. 11 Mile Rd.
Berkley, MI 48072

Subject: Beacon and Bridge #8
01-4982-0-006

Dear Ms. Santiago :

Thank you for making Brighton Analytical, L.L.C. your laboratory of choice. Attached are the results for the samples submitted on 01/18/2016 for the above mentioned project. NELAP/TNI Accredited Analysis and MDEQ Drinking Water Certified Analysis will be identified in their respective reporting formats. Hard copies can be supplied at your request for a fee of $20.00 per copy.

The invoice for this project will be emailed separately. If you have any questions concerning the data or invoice, please don't hesitate to contact our office. We welcome your comments and suggestions to improve our quality systems. Please reference Brighton Analytical, L.L.C. Project ID 37379 when calling or emailing. We thank you for this opportunity to partner with you on this project and hope to work with you again in the future.

Sincerely,
Brighton Analytical, L.L.C.

NELAP ACCREDITED LABORATORY
Certified WBENC Women's Business Enterprise

**Brighton Analytical, L.L.C.™**
Email: bai-brighton@sbcglobal.net
2105 Pless Drive
Brighton, MI 48114
Phone: 810-229-7575
Fax: 810-229-8650

BA PROJECT #: 37379

PAGE 1 OF 1

**ABBREVIATIONS FOR MATRIX**
S = Solid
L = Liquid
DW = Drinking $H_2O$
O = Oil
P = Wipe
A = Air (Tedlar Bag)
F = Filter
T = Tube
M = Misc.

PROJECT NAME: Beacon and Bridge #8

PROJECT #: 01-4982-0-006

PO #: (PLEASE NOTE IF DIFFERENT BILLING ADDRESS)

Sample collected by: SS/CW/DS

REQUESTED TURNAROUND: (circle one)
Rush: 1-3 business days (verify with lab & specify date needed)
1 Day = 2.5X Cost 2 Day = 2X Cost 3 Day = 1.5X Cost
Standard: 5 business days

If RUSH, approved by: _____

Sample Coll.

Container Type & Quantity

| Brighton ID # | Sample Description | Date (2016) | Time | VOA'S (PRES Y N N/A) | HDPE UNPRESERVED | HDPE $HNO_3$ | HDPE $H_2SO_4$ | HDPE NAOH | AMBER NO PRESERVED? | GLASS, NO PRESERVATIVE | STERILIZED BACTERIA | MEOH Preserved Y N | Sample Matrix | Unleaded/leaded GAS VOC'S | GRO | | | | | | HOLD |
|---|---|---|---|---|---|---|---|---|---|---|---|---|---|---|---|---|---|---|---|---|---|
| 1) 4636 | MW-6 | 1/15 | 1630 | 3 | | | | | 1 | | | | GW | X | X | | | | | | |
| 2) 4637 | MW-10 | 1/15 | 1815 | 3 | | | | | 1 | | | | GW | X | X | | | | | | |
| 3) 4638 | MW-16 | 1/15 | 1215 | 3 | | | | | 1 | | | | GW | X | X | | | | | | |
| 4) 4639 | MW-17 | 1/15 | 1300 | 3 | | | | | 1 | | | | GW | X | X | | | | | | |
| 5) 4640 | MW-18 | 1/15 | 1725 | 3 | | | | | 1 | | | | GW | X | X | | | | | | |
| 6) 4641 | MW-19 | 1/15 | 1120 | 3 | | | | | 1 | | | | GW | X | X | | | | | | |
| 7) 4642 | MW-20 | 1/15 | 1745 | 3 | | | | | 1 | | | | GW | X | X | | | | | | |
| 8) | | | | | | | | | | | | | | | | | | | | | |
| 9) | | | | | | | | | | | | | | | | | | | | | |
| 10) | | | | | | | | | | | | | | | | | | | | | |

NO GRO FOR H2O (SS)

COMPANY/MAILING ADDRESS:
4080 West 11 Mile Rd
Berkley MI
48072

ATTN: Christie Santiago

PHONE: 248 336 9988

FAX OR EMAIL: santiago@pmenu.com

Samples received within hold time? yes ☐ no ☐

Temperature of samples °C:

pHs verified in login? yes ☐ no ☐

Headspace/bubbles in VOA's? yes ☐ no ☐ n/a ☐

Sample containers and COC match? yes ☐ no ☐

BILLING ADDRESS (IF REQUIRED):
AP@PMENU.com

**Drinking $H_2O$:**
Fax to LCHD? yes ☐ no ☐
Chlorinated Water Supply? yes ☐ no ☐
AMT.: _____

MCL Failure: yes ☐ no ☐
Client Notified (date/time/initials): _____

**Special Instructions:**

*Please fill out the Chain of Custody completely and review. Incorrect or incomplete information will result in a "hold" on all analyses.*

| Trans. # | RELINQUISHED BY: | RECEIVED BY: | DATE: | TIME: | Trans. # | RELINQUISHED BY: | RECEIVED BY: | DATE: | TIME: |
|---|---|---|---|---|---|---|---|---|---|
| 1 | [signature] | PM Storage | 1/15/16 | 2000 | 3 | [signature] | [signature] | 1-18-16 | 4:50 pm |
| 2 | PM Storage | [signature] | 1/18/16 | 12:00 | 4 | | | | |

**Brighton Analytical, L.L.C.**
**2105 Pless Drive**
**Brighton, Michigan 48116**
**Phone: (810) 229-7575 FAX: (810) 229-8650**
e-mail: bai-brighton@sbcglobal.net

Sample Date: 1/15/2016
Submit Date: 1/18/2016
Report Date: 1/20/2016

To: PM Environmental, Inc.
4080 W. 11 Mile Rd.
Berkley, MI 48072

BA Report Number: **37379**
BA Sample ID: **CC04636**

Project Name: **Beacon and Bridge #8**
Project Number: **01-4982-0-006**
Sample ID: **MW-6**

| Parameters | Results | Units | DL | Method Reference | Analyst | Analysis Date |
|---|---|---|---|---|---|---|
| **Volatile Analysis** | | | | | | |
| Benzene | <1 | ug/L | 1 | SW846 8260C | RG | 1/19/2016 |
| 1,2-Dibromoethane | <1 | ug/L | 1 | SW846 8260C | RG | 1/19/2016 |
| 1,2-Dichloroethane | <1 | ug/L | 1 | SW846 8260C | RG | 1/19/2016 |
| Ethanol(Ethyl alcohol) | <1000 | ug/L | 1000 | SW846 8260C | RG | 1/19/2016 |
| Ethylbenzene | <1 | ug/L | 1 | SW846 8260C | RG | 1/19/2016 |
| Isopropylbenzene | <1 | ug/L | 1 | SW846 8260C | RG | 1/19/2016 |
| 2-Methylnaphthalene | <5 | ug/L | 5 | SW846 8260C | RG | 1/19/2016 |
| MTBE | <1 | ug/L | 1 | SW846 8260C | RG | 1/19/2016 |
| Naphthalene | <5 | ug/L | 5 | SW846 8260C | RG | 1/19/2016 |
| n-Propylbenzene | <1 | ug/L | 1 | SW846 8260C | RG | 1/19/2016 |
| Toluene | <1 | ug/L | 1 | SW846 8260C | RG | 1/19/2016 |
| 1,2,3-Trimethylbenzene | <1 | ug/L | 1 | SW846 8260C | RG | 1/19/2016 |
| 1,2,4-Trimethylbenzene | <1 | ug/L | 1 | SW846 8260C | RG | 1/19/2016 |
| 1,3,5-Trimethylbenzene | <1 | ug/L | 1 | SW846 8260C | RG | 1/19/2016 |
| Xylenes(total) | 3 | ug/L | 3 | SW846 8260C | RG | 1/19/2016 |

DL=Reported detection limit for analytical method requested. Some compounds require special analytical methods to achieve MDNR designated target detection limits (TDL).

Released by:

Date: 1/20/16

**Brighton Analytical, L.L.C.**
**2105 Pless Drive**
**Brighton, Michigan 48116**
**Phone: (810) 229-7575 FAX: (810) 229-8650**
e-mail: bai-brighton@sbcglobal.net

Sample Date: 1/15/2016
Submit Date: 1/18/2016
Report Date: 1/20/2016

To: PM Environmental, Inc.
4080 W. 11 Mile Rd.
Berkley, MI 48072

BA Report Number: **37379**
BA Sample ID: **CC04637**

Project Name: **Beacon and Bridge #8**
Project Number: **01-4982-0-006**
Sample ID: **MW-10**

| Parameters | Results | Units | DL | Method Reference | Analyst | Analysis Date |
|---|---|---|---|---|---|---|
| **Volatile Analysis** | | | | | | |
| Benzene | **74** | ug/L | 10 | SW846 8260C | RG | 1/19/2016 |
| 1,2-Dibromoethane | **<10** | ug/L | 10 | SW846 8260C | RG | 1/19/2016 |
| 1,2-Dichloroethane | **<10** | ug/L | 10 | SW846 8260C | RG | 1/19/2016 |
| Ethanol(Ethyl alcohol) | **<10000** | ug/L | 10000 | SW846 8260C | RG | 1/19/2016 |
| Ethylbenzene | **<10** | ug/L | 10 | SW846 8260C | RG | 1/19/2016 |
| Isopropylbenzene | **<10** | ug/L | 10 | SW846 8260C | RG | 1/19/2016 |
| 2-Methylnaphthalene | **<50** | ug/L | 50 | SW846 8260C | RG | 1/19/2016 |
| MTBE | **<10** | ug/L | 10 | SW846 8260C | RG | 1/19/2016 |
| Naphthalene | **<50** | ug/L | 50 | SW846 8260C | RG | 1/19/2016 |
| n-Propylbenzene | **<10** | ug/L | 10 | SW846 8260C | RG | 1/19/2016 |
| Toluene | **<10** | ug/L | 10 | SW846 8260C | RG | 1/19/2016 |
| 1,2,3-Trimethylbenzene | **30** | ug/L | 10 | SW846 8260C | RG | 1/19/2016 |
| 1,2,4-Trimethylbenzene | **33** | ug/L | 10 | SW846 8260C | RG | 1/19/2016 |
| 1,3,5-Trimethylbenzene | **26** | ug/L | 10 | SW846 8260C | RG | 1/19/2016 |
| Xylenes(total) | **77** | ug/L | 30 | SW846 8260C | RG | 1/19/2016 |

DL=Reported detection limit for analytical method requested. Some compounds require special analytical methods to achieve MDNR designated target detection limits (TDL).

Released by: [signature]

Date: 1/20/16

Elevated volatile dl due to sample matrix.

**Brighton Analytical, L.L.C.**
**2105 Pless Drive**
**Brighton, Michigan 48116**
**Phone: (810) 229-7575 FAX: (810) 229-8650**
e-mail: bai-brighton@sbcglobal.net

Sample Date: 1/15/2016
Submit Date: 1/18/2016
Report Date: 1/20/2016

To: PM Environmental, Inc.
4080 W. 11 Mile Rd.
Berkley, MI 48072

BA Report Number: **37379**
BA Sample ID: **CC04638**

Project Name: **Beacon and Bridge #8**
Project Number: **01-4982-0-006**
Sample ID: **MW-16**

| Parameters | Results | Units | DL | Method Reference | Analyst | Analysis Date |
|---|---|---|---|---|---|---|
| **Volatile Analysis** | | | | | | |
| Benzene | <1 | ug/L | 1 | SW846 8260C | RG | 1/19/2016 |
| 1,2-Dibromoethane | <1 | ug/L | 1 | SW846 8260C | RG | 1/19/2016 |
| 1,2-Dichloroethane | <1 | ug/L | 1 | SW846 8260C | RG | 1/19/2016 |
| Ethanol(Ethyl alcohol) | <1000 | ug/L | 1000 | SW846 8260C | RG | 1/19/2016 |
| Ethylbenzene | <1 | ug/L | 1 | SW846 8260C | RG | 1/19/2016 |
| Isopropylbenzene | <1 | ug/L | 1 | SW846 8260C | RG | 1/19/2016 |
| 2-Methylnaphthalene | <5 | ug/L | 5 | SW846 8260C | RG | 1/19/2016 |
| MTBE | <1 | ug/L | 1 | SW846 8260C | RG | 1/19/2016 |
| Naphthalene | <5 | ug/L | 5 | SW846 8260C | RG | 1/19/2016 |
| n-Propylbenzene | <1 | ug/L | 1 | SW846 8260C | RG | 1/19/2016 |
| Toluene | <1 | ug/L | 1 | SW846 8260C | RG | 1/19/2016 |
| 1,2,3-Trimethylbenzene | <1 | ug/L | 1 | SW846 8260C | RG | 1/19/2016 |
| 1,2,4-Trimethylbenzene | <1 | ug/L | 1 | SW846 8260C | RG | 1/19/2016 |
| 1,3,5-Trimethylbenzene | <1 | ug/L | 1 | SW846 8260C | RG | 1/19/2016 |
| Xylenes(total) | 5 | ug/L | 3 | SW846 8260C | RG | 1/19/2016 |

DL=Reported detection limit for analytical method requested. Some compounds require special analytical methods to achieve MDNR designated target detection limits (TDL).

Released by:

Date: 1/20/16

**Brighton Analytical, L.L.C.**
**2105 Pless Drive**
**Brighton, Michigan 48116**
**Phone: (810) 229-7575 FAX: (810) 229-8650**
e-mail: bai-brighton@sbcglobal.net

Sample Date: 1/15/2016
Submit Date: 1/18/2016
Report Date: 1/20/2016

To: PM Environmental, Inc.
4080 W. 11 Mile Rd.
Berkley, MI 48072

BA Report Number: **37379**
BA Sample ID: **CC04639**

Project Name: **Beacon and Bridge #8**
Project Number: **01-4982-0-006**
Sample ID: **MW-17**

| Parameters | Results | Units | DL | Method Reference | Analyst | Analysis Date |
|---|---|---|---|---|---|---|
| **Volatile Analysis** | | | | | | |
| Benzene | **<1** | ug/L | 1 | SW846 8260C | RG | 1/19/2016 |
| 1,2-Dibromoethane | **<1** | ug/L | 1 | SW846 8260C | RG | 1/19/2016 |
| 1,2-Dichloroethane | **<1** | ug/L | 1 | SW846 8260C | RG | 1/19/2016 |
| Ethanol(Ethyl alcohol) | **<1000** | ug/L | 1000 | SW846 8260C | RG | 1/19/2016 |
| Ethylbenzene | **5** | ug/L | 1 | SW846 8260C | RG | 1/19/2016 |
| Isopropylbenzene | **<1** | ug/L | 1 | SW846 8260C | RG | 1/19/2016 |
| 2-Methylnaphthalene | **<5** | ug/L | 5 | SW846 8260C | RG | 1/19/2016 |
| MTBE | **<1** | ug/L | 1 | SW846 8260C | RG | 1/19/2016 |
| Naphthalene | **<5** | ug/L | 5 | SW846 8260C | RG | 1/19/2016 |
| n-Propylbenzene | **<1** | ug/L | 1 | SW846 8260C | RG | 1/19/2016 |
| Toluene | **<1** | ug/L | 1 | SW846 8260C | RG | 1/19/2016 |
| 1,2,3-Trimethylbenzene | **<1** | ug/L | 1 | SW846 8260C | RG | 1/19/2016 |
| 1,2,4-Trimethylbenzene | **11** | ug/L | 1 | SW846 8260C | RG | 1/19/2016 |
| 1,3,5-Trimethylbenzene | **<1** | ug/L | 1 | SW846 8260C | RG | 1/19/2016 |
| Xylenes(total) | **27** | ug/L | 3 | SW846 8260C | RG | 1/19/2016 |

DL=Reported detection limit for analytical method requested. Some compounds require special analytical methods to achieve MDNR designated target detection limits (TDL).

Released by:

Date: 1/20/16

**Brighton Analytical, L.L.C.**
**2105 Pless Drive**
**Brighton, Michigan 48116**
**Phone: (810) 229-7575 FAX: (810) 229-8650**
e-mail: bai-brighton@sbcglobal.net

Sample Date: 1/15/2016
Submit Date: 1/18/2016
Report Date: 1/20/2016

To: PM Environmental, Inc.
4080 W. 11 Mile Rd.
Berkley, MI 48072

BA Report Number: **37379**
BA Sample ID: **CC04640**

Project Name: **Beacon and Bridge #8**
Project Number: **01-4982-0-006**
Sample ID: **MW-18**

| Parameters | Results | Units | DL | Method Reference | Analyst | Analysis Date |
|---|---|---|---|---|---|---|
| **Volatile Analysis** | | | | | | |
| Benzene | **<1** | ug/L | 1 | SW846 8260C | RG | 1/19/2016 |
| 1,2-Dibromoethane | **<1** | ug/L | 1 | SW846 8260C | RG | 1/19/2016 |
| 1,2-Dichloroethane | **<1** | ug/L | 1 | SW846 8260C | RG | 1/19/2016 |
| Ethanol(Ethyl alcohol) | **<1000** | ug/L | 1000 | SW846 8260C | RG | 1/19/2016 |
| Ethylbenzene | **4** | ug/L | 1 | SW846 8260C | RG | 1/19/2016 |
| Isopropylbenzene | **<1** | ug/L | 1 | SW846 8260C | RG | 1/19/2016 |
| 2-Methylnaphthalene | **<5** | ug/L | 5 | SW846 8260C | RG | 1/19/2016 |
| MTBE | **<1** | ug/L | 1 | SW846 8260C | RG | 1/19/2016 |
| Naphthalene | **<5** | ug/L | 5 | SW846 8260C | RG | 1/19/2016 |
| n-Propylbenzene | **<1** | ug/L | 1 | SW846 8260C | RG | 1/19/2016 |
| Toluene | **7** | ug/L | 1 | SW846 8260C | RG | 1/19/2016 |
| 1,2,3-Trimethylbenzene | **1** | ug/L | 1 | SW846 8260C | RG | 1/19/2016 |
| 1,2,4-Trimethylbenzene | **8** | ug/L | 1 | SW846 8260C | RG | 1/19/2016 |
| 1,3,5-Trimethylbenzene | **2** | ug/L | 1 | SW846 8260C | RG | 1/19/2016 |
| Xylenes(total) | **19** | ug/L | 3 | SW846 8260C | RG | 1/19/2016 |

DL=Reported detection limit for analytical method requested. Some compounds require special analytical methods to achieve MDNR designated target detection limits (TDL).

Released by:

Date: 1/20/16

**Brighton Analytical, L.L.C.**
**2105 Pless Drive**
**Brighton, Michigan 48116**
**Phone: (810) 229-7575 FAX: (810) 229-8650**
e-mail: bai-brighton@sbcglobal.net

Sample Date: 1/15/2016
Submit Date: 1/18/2016
Report Date: 1/20/2016

To: PM Environmental, Inc.
4080 W. 11 Mile Rd.
Berkley, MI 48072

BA Report Number: **37379**
BA Sample ID: **CC04641**

Project Name: **Beacon and Bridge #8**
Project Number: **01-4982-0-006**
Sample ID: **MW-19**

| Parameters | Results | Units | DL | Method Reference | Analyst | Analysis Date |
|---|---|---|---|---|---|---|
| **Volatile Analysis** | | | | | | |
| Benzene | <1 | ug/L | 1 | SW846 8260C | RG | 1/19/2016 |
| 1,2-Dibromoethane | <1 | ug/L | 1 | SW846 8260C | RG | 1/19/2016 |
| 1,2-Dichloroethane | <1 | ug/L | 1 | SW846 8260C | RG | 1/19/2016 |
| Ethanol(Ethyl alcohol) | <1000 | ug/L | 1000 | SW846 8260C | RG | 1/19/2016 |
| Ethylbenzene | <1 | ug/L | 1 | SW846 8260C | RG | 1/19/2016 |
| Isopropylbenzene | <1 | ug/L | 1 | SW846 8260C | RG | 1/19/2016 |
| 2-Methylnaphthalene | <5 | ug/L | 5 | SW846 8260C | RG | 1/19/2016 |
| MTBE | <1 | ug/L | 1 | SW846 8260C | RG | 1/19/2016 |
| Naphthalene | <5 | ug/L | 5 | SW846 8260C | RG | 1/19/2016 |
| n-Propylbenzene | <1 | ug/L | 1 | SW846 8260C | RG | 1/19/2016 |
| Toluene | <1 | ug/L | 1 | SW846 8260C | RG | 1/19/2016 |
| 1,2,3-Trimethylbenzene | <1 | ug/L | 1 | SW846 8260C | RG | 1/19/2016 |
| 1,2,4-Trimethylbenzene | <1 | ug/L | 1 | SW846 8260C | RG | 1/19/2016 |
| 1,3,5-Trimethylbenzene | <1 | ug/L | 1 | SW846 8260C | RG | 1/19/2016 |
| Xylenes(total) | <3 | ug/L | 3 | SW846 8260C | RG | 1/19/2016 |

DL=Reported detection limit for analytical method requested. Some compounds require special analytical methods to achieve MDNR designated target detection limits (TDL).

Released by:

Date: 1/20/16

**Brighton Analytical, L.L.C.**
**2105 Pless Drive**
**Brighton, Michigan 48116**
**Phone: (810) 229-7575 FAX: (810) 229-8650**
e-mail: bai-brighton@sbcglobal.net

Sample Date: 1/15/2016
Submit Date: 1/18/2016
Report Date: 1/20/2016

To: PM Environmental, Inc.
4080 W. 11 Mile Rd.
Berkley, MI 48072

BA Report Number: **37379**
BA Sample ID: **CC04642**

Project Name: **Beacon and Bridge #8**
Project Number: **01-4982-0-006**
Sample ID: **MW-20**

| Parameters | Results | Units | DL | Method Reference | Analyst | Analysis Date |
|---|---|---|---|---|---|---|
| **Volatile Analysis** | | | | | | |
| Benzene | <1 | ug/L | 1 | SW846 8260C | RG | 1/19/2016 |
| 1,2-Dibromoethane | <1 | ug/L | 1 | SW846 8260C | RG | 1/19/2016 |
| 1,2-Dichloroethane | <1 | ug/L | 1 | SW846 8260C | RG | 1/19/2016 |
| Ethanol(Ethyl alcohol) | <1000 | ug/L | 1000 | SW846 8260C | RG | 1/19/2016 |
| Ethylbenzene | 1 | ug/L | 1 | SW846 8260C | RG | 1/19/2016 |
| Isopropylbenzene | <1 | ug/L | 1 | SW846 8260C | RG | 1/19/2016 |
| 2-Methylnaphthalene | <5 | ug/L | 5 | SW846 8260C | RG | 1/19/2016 |
| MTBE | <1 | ug/L | 1 | SW846 8260C | RG | 1/19/2016 |
| Naphthalene | <5 | ug/L | 5 | SW846 8260C | RG | 1/19/2016 |
| n-Propylbenzene | <1 | ug/L | 1 | SW846 8260C | RG | 1/19/2016 |
| Toluene | <1 | ug/L | 1 | SW846 8260C | RG | 1/19/2016 |
| 1,2,3-Trimethylbenzene | <1 | ug/L | 1 | SW846 8260C | RG | 1/19/2016 |
| 1,2,4-Trimethylbenzene | <1 | ug/L | 1 | SW846 8260C | RG | 1/19/2016 |
| 1,3,5-Trimethylbenzene | <1 | ug/L | 1 | SW846 8260C | RG | 1/19/2016 |
| Xylenes(total) | 7 | ug/L | 3 | SW846 8260C | RG | 1/19/2016 |

DL=Reported detection limit for analytical method requested. Some compounds require special analytical methods to achieve MDNR designated target detection limits (TDL).

Released by:

Date: 1/20/16

# Appendix C

PM ENVIRONMENTAL | Environmental & Engineering Services

## Conceptual Site Model for Vapor Intrusion

Below is a summary of the recommended information as outlined in the May 2013 MDEQ Guidance Document for the Vapor Intrusion Pathway and the location in the information in the Closure Report, when applicable.

| | |
|---|---|
| **UTILITIES AND PROCESS PIPING** | |
| Maps, figures, and cross-sections of the building providing the location and depths of all underground utilities and/or process piping near the soil or groundwater impacts | **Fig. 2-11** |
| All utilities that connect contaminated areas to buildings are shown and described | **Fig. 2-11** |
| **BUILDINGS (RECEPTORS)** | |
| Maps identify: | |
| Existing or proposed buildings | **Fig 2** |
| Vacant parcels | **Fig 2** |
| Property boundaries | **Fig 2** |
| Description of the occupancy and use of all properties/buildings | **1.0 (p. 1-2)** |
| Construction of each structure is provided and includes: | |
| General construction style | **1.0 (p. 1-2)** |
| Floor Construction | **1.0 (p. 1-2)** |
| Depth below grade of the lowest floor | **1.0 (p. 1-2)** |
| Building Layout | **1.0 (p. 1-2)** |
| Height (and number of floors) | **1.0 (p. 1-2)** |
| Sumps or foundation drains | **1.0 (p. 1-2)** |
| Alternate ventilation system | **1.0 (p. 1-2)** |
| Elevators(s) | **None Present** |
| Heating, ventilation, or air condition system in each structure is described and includes (if applicable): | |
| Type | **1.0 (p. 1-2)** |
| Equipment location | **1.0 (p. 1-2)** |
| Source of return air | **1.0 (p. 1-2)** |
| System design consideration relating to indoor air pressure | **None Specified** |
| All sub-slab ventilation systems or moisture barriers present are described; identified on all building cross-sections; and mapped, if only a portion of the structure | **None Present** |
| **SOURCE AREA(S)** | |
| Brief description and known history of the release | **1.6 (p. 4-7)** |
| Maps and figures identify and show the location of vapor source(s) in relation to each structure (including the presence, distribution, and composite of any non-aqueous phase liquid at the site). | **Fig. 3-5** |
| Select cross-sections showing example building, construction styles, and relationship to source of vapors are provided | **Fig. 8-10** |
| Description of the potential migration characteristics for the distribution of contaminants is provided | **1.8.2 and 1.9.4 and 1.10, (p. 17-27)** |

## Conceptual Site Model for Vapor Intrusion

| | |
|---|---|
| **GEOLOGY/HYDROGEOLOGY** | |
| Maps, figures, cross-sections, and/or description identifying soil lithology and characteristics: | **App. A, 1.8.1 (p. 17), Figures 8-10** |
| Heterogeneity/homogeneity of soils and the lithologic units encountered including: | |
| Depth and lateral continuity of any confining units that may impede contaminant migration | **App. A, 1.8.1 (p. 17)** |
| Depth and lateral continuity of any highly transmissive units that may enhance contaminant migration | **App. A, 1.8.1 (p. 17), Figure 11** |
| Depth of vadose zone, capillary fringe, and phreatic zone including: | |
| Any seasonal water table fluctuations | **Table 4 and Figures 8-10** |
| Groundwater flow direction | **1.9.1 (p. 20-21), Figures 7A and 7B** |
| Presence of any perched groundwater | **1.9.1 (p. 20-21), Figures 7A and 7B** |
| Note where the water table intersects the well screen interval or the presence of a submerged screen | **Appendix A, Figures 8-10** |
| Description and location of distinct strata (soil type and moisture contact) and the depth intervals. | **App. A, 1.8.1, (p. 17)** |
| Description and location of all fill and non-native materials | **App. A, 1.8.1 (p. 17)** |
| Depth to groundwater identified on all cross-sections | **Figures 8B-10B** |
| General groundwater characteristics provided (e.g., seasonal fluctuation, hydraulic gradient). | **1.9.1 (p. 20-21) Figures 7A and 7B** |
| **SITE CHARACTERISTICS** | |
| Map of the site (to scale) showing all paved areas, surface cover, locations of all structures, and ground cover. | **Fig. 2** |
| Map identifying all potential sources of vapors | **Fig. 3-10** |

# Appendix D

PM ENVIRONMENTAL | Environmental & Engineering Services

PM ENVIRONMENTAL
Risk Well Managed

Detroit
4080 W. 11 Mile Road
Berkley, MI 48072
f: 877.884.6775
t: 248.336.9988

Lansing
3340 Ranger Road
Lansing, MI 48906
f: 877.884.6775
t: 517.321.3331

Grand Rapids
560 5th Street, NW
Suite 301
Grand Rapids, MI 49503
f: 877.884.6775
t: 616.285.8857

February 9, 2016

Mr. Warren Furry
P.O. Box 430
Linden, Michigan 48451

**Re: Notice of Impacted Parties**
**From the Beacon & Bridge Market #8**
**Located at 110 East Broad Street, Linden, Michigan**
**PM Environmental, Inc. Project No. 01-4982-0-002**

Dear Mr. Furry:

This correspondence is intended to inform the current property owner of 111 South Bridge Street and 122 East Broad Street, Linden, Michigan that soil and groundwater contamination is believed to have migrated from the Beacon and Bridge Market #8 property located at 110 East Broad Street, Linden, Michigan to a portion of your property. The attachment is a completed "Notice to Impacted Parties" MDEQ form EQP 4003 (rev 1/2013) for the above referenced site. Submission of this correspondence should not be construed as an admission of any liability or a waiver of any defense or right. All rights and defenses afforded to Rare Family Partnership are reserved regarding liability or responsibility for conditions at the facility.

If you have any questions please contact us at (248) 336-9988.

Sincerely,
**PM ENVIRONMENTAL, INC.**

Christie L. Santiago
Senior Project Manager

Cc: Mr. Cliff Knaggs - Knaggs, Harter, Brake & Schneider, P.C.

MICHIGAN DEPARTMENT OF ENVIRONMENTAL QUALITY – REMEDIATION AND REDEVELOPMENT DIVISION
PO BOX 30426, LANSING, MI 48909-7926, Phone 517-284-5087, Fax 517-241-9581

# NOTICE TO IMPACTED PARTIES OF CORRECTIVE ACTION

*This information is being sent to notify you that your property is impacted by petroleum products or other regulated substances that were released from an Underground Storage Tank (UST) and to notify you of the steps that are being taken to address the contamination. This information is required to be sent to you under Sections 21309a(3) of Part 213, Leaking Underground Storage Tanks, of the Natural Resources and Environmental Protection Act, 1994 PA 451, as amended.*

| | | | |
|---|---|---|---|
| OWNER OR OPERATOR PROPOSING CORRECTIVE ACTION: Quick Sav Food Stores, Ltd. | | | |
| LOCATION OF RELEASE (SITE NAME): Beacon & Bridge Market #8 | | | |
| STREET ADDRESS: 110 East Broad Street | | | |
| CITY: Linden | ZIP: 48451 | COUNTY: Genesee | |
| CONTACT PERSON: Robert Carpentier | PHONE: 810.835.4341 | | |
| MAILING ADDRESS: 6285 Taylor Drive | CITY: Flint | STATE: MI | ZIP: 48507 |

| | | | |
|---|---|---|---|
| PROPERTY DIRECTLY IMPACTED BY THE RELEASE: 111 South Bridge Street and 122 East Broad Street | | | |
| PROPERTY OWNERS NAME: Mr. Warren Furry | | | |
| PROPERTY ADDRESS: 111 South Bridge Street and 122 East Broad Street | | | |
| CITY: Linden | ZIP: 48451 | COUNTY: Genesee | |
| MAILING ADDRESS: P.O. Box 430 | CITY: Linden | STATE: MI | ZIP: 48451 |

☒ The groundwater at this property is contaminated with petroleum products or other regulated substances.

☒ The soil at this property is contaminated with petroleum products or other regulated substances.

Type of corrective action(s) or restriction(s) proposed for this release:

Biophysical LNAPL Remediation Technology

Corrective Action Goal/Objective for your property:

☒ **Unrestricted Residential** (Petroleum products or other regulated substances would remain at levels that allow for the use of the property for any residential purpose, with no restrictions.)

☐ **Unrestricted Non-Residential** (Petroleum products or other regulated substances would remain at levels that allow for the use of the property for any non-residential purpose, with no restrictions.)

☐ **Restricted Residential** (Petroleum products or other regulated substances would remain at levels that require some restricted use of the property. The property can be used for residential purposes with the appropriate restrictions applied to the deed with the property owner's approval.)

☐ **Restricted Non-Residential** (Petroleum products or other regulated substances would remain at levels that require some restricted use of the property. The property can be used for non-residential purposes with the appropriate restrictions applied to the deed with the property owner's approval.)

This notice does not constitute a warranty or representation of any kind by the State of Michigan that the corrective actions performed in accordance with this notice will result in the achievement of the remedial criteria established by Law, or that the property is suitable for any particular use.

Site release information and corrective action plans are made available to the public at the local Department of Environmental Quality (DEQ), Remediation and Redevelopment Division (RRD) District Office listed below:

Lansing District Office –Constiution Hall, 525 W. Allegan Street, Lansing, Michigan 48909

To obtain a copy of this information, please go to www.michigan.gov/deq, Freedom of Information Act (FOIA) Link for further details, or contact the DEQ FOIA Office by phone at: 800-662-9278.

CERTIFIED MAIL

7015 1730 0000 8598 6925

7015 1730 0000 8598 6925

**U.S. Postal Service™**
**CERTIFIED MAIL® RECEIPT**
*Domestic Mail Only*

For delivery information, visit our website at www.usps.com®

Certified Mail Fee
$

Extra Services & Fees (*check box, add fee as appropriate*)
- ☐ Return Receipt (hardcopy) $
- ☐ Return Receipt (electronic) $
- ☐ Certified Mail Restricted Delivery $
- ☐ Adult Signature Required $
- ☐ Adult Signature Restricted Delivery $

Postage
$

Total Postage and Fees
$

Postmark Here

Sent To Mr. Warren Furry

Street and Apt. No., or PO Box No. PO Box 430

City, State, ZIP+4® Linden, MI 48451

01-4942-0010

PS Form 3800, April 2015 PSN 7530-02-000-9047 See Reverse for Instructions

**SENDER: COMPLETE THIS SECTION**

- Complete items 1, 2, and 3.
- Print your name and address on the reverse so that we can return the card to you.
- Attach this card to the back of the mailpiece, or on the front if space permits.

1. Article Addressed to:

Mr. Warren Furry
P.O. Box 430
Linden, MI 48451

9590 9403 0225 5146 5717 46

2. Article Number (*Transfer from service label*)
7015 1730 0000 8598 6925

**COMPLETE THIS SECTION ON DELIVERY**

A. Signature
X
☐ Agent
☐ Addressee

B. Received by (*Printed Name*)

C. Date of Delivery

D. Is delivery address different from item 1? ☐ Yes
If YES, enter delivery address below: ☐ No

3. Service Type
- ☐ Adult Signature
- ☐ Adult Signature Restricted Delivery
- ☐ Certified Mail®
- ☐ Certified Mail Restricted Delivery
- ☐ Collect on Delivery
- ☐ Collect on Delivery Restricted Delivery
- ☐ Insured Mail
- ☐ Insured Mail Restricted Delivery (over $500)
- ☐ Priority Mail Express®
- ☒ Registered Mail™
- ☐ Registered Mail Restricted Delivery
- ☒ Return Receipt for Merchandise
- ☐ Signature Confirmation™
- ☐ Signature Confirmation Restricted Delivery

PS Form 3811, April 2015 PSN 7530-02-000-9053 Domestic Return Receipt

PM ENVIRONMENTAL
Risk Well Managed

Detroit
4080 W. 11 Mile Road
Berkley, MI 48072
f: 877.884.6775
t: 248.336.9988

Lansing
3340 Ranger Road
Lansing, MI 48906
f: 877.884.6775
t: 517.321.3331

Grand Rapids
560 5th Street, NW
Suite 301
Grand Rapids, MI 49503
f: 877.884.6775
t: 616.285.8857

February 9, 2016

J. G. Betley
604 West Silver Lake Road
Fenton, Michigan 48430

**Re: Notice of Impacted Parties**
**From the Beacon & Bridge Market #8**
**Located at 110 East Broad Street, Linden, Michigan**
**PM Environmental, Inc. Project No. 01-4982-0-002**

Dear Property Owner:

This correspondence is intended to inform the current property owner of 100 South Bridge Street, Linden, Michigan that soil and groundwater contamination is believed to have migrated from the Beacon and Bridge Market #8 property located at 110 East Broad Street, Linden, Michigan to a portion of your property. The attachment is a completed "Notice to Impacted Parties" MDEQ form EQP 4003 (rev 1/2013) for the above referenced site. Submission of this correspondence should not be construed as an admission of any liability or a waiver of any defense or right. All rights and defenses afforded to Rare Family Partnership are reserved regarding liability or responsibility for conditions at the facility.

If you have any questions please contact us at (248) 336-9988.

Sincerely,
**PM ENVIRONMENTAL, INC.**

Christie L. Santiago
Senior Project Manager

Cc: Mr. Cliff Knaggs - Knaggs, Harter, Brake & Schneider, P.C.

MICHIGAN DEPARTMENT OF ENVIRONMENTAL QUALITY – REMEDIATION AND REDEVELOPMENT DIVISION
PO BOX 30426, LANSING, MI 48909-7926, Phone 517-284-5087, Fax 517-241-9581

# NOTICE TO IMPACTED PARTIES OF CORRECTIVE ACTION

*This information is being sent to notify you that your property is impacted by petroleum products or other regulated substances that were released from an Underground Storage Tank (UST) and to notify you of the steps that are being taken to address the contamination. This information is required to be sent to you under Sections 21309a(3) of Part 213, Leaking Underground Storage Tanks, of the Natural Resources and Environmental Protection Act, 1994 PA 451, as amended.*

| | | | |
|---|---|---|---|
| OWNER OR OPERATOR PROPOSING CORRECTIVE ACTION: Quick Sav Food Stores, Ltd. | | | |
| LOCATION OF RELEASE (SITE NAME): Beacon & Bridge Market #8 | | | |
| STREET ADDRESS: 110 East Broad Street | | | |
| CITY: Linden | ZIP: 48451 | COUNTY: Genesee | |
| CONTACT PERSON: Robert Carpentier | PHONE: 810.835.4341 | | |
| MAILING ADDRESS: 6285 Taylor Drive | CITY: Flint | STATE: MI | ZIP: 48507 |

| | | | |
|---|---|---|---|
| PROPERTY DIRECTLY IMPACTED BY THE RELEASE: 100 South Bridge Street | | | |
| PROPERTY OWNERS NAME: J. G. Betley | | | |
| PROPERTY ADDRESS: 100 South Bridge Street | | | |
| CITY: Linden | ZIP: 48451 | COUNTY: Genesee | |
| MAILING ADDRESS: 604 West Silver Lake Road | CITY: Fenton | STATE: MI | ZIP: 48430 |

☒ The groundwater at this property is contaminated with petroleum products or other regulated substances.

☒ The soil at this property is contaminated with petroleum products or other regulated substances.

Type of corrective action(s) or restriction(s) proposed for this release:

Biophysical LNAPL Remediation Technology

Corrective Action Goal/Objective for your property:

☒ **Unrestricted Residential** (Petroleum products or other regulated substances would remain at levels that allow for the use of the property for any residential purpose, with no restrictions.)

☐ **Unrestricted Non-Residential** (Petroleum products or other regulated substances would remain at levels that allow for the use of the property for any non-residential purpose, with no restrictions.)

☐ **Restricted Residential** (Petroleum products or other regulated substances would remain at levels that require some restricted use of the property. The property can be used for residential purposes with the appropriate restrictions applied to the deed with the property owner's approval.)

☐ **Restricted Non-Residential** (Petroleum products or other regulated substances would remain at levels that require some restricted use of the property. The property can be used for non-residential purposes with the appropriate restrictions applied to the deed with the property owner's approval.)

This notice does not constitute a warranty or representation of any kind by the State of Michigan that the corrective actions performed in accordance with this notice will result in the achievement of the remedial criteria established by Law, or that the property is suitable for any particular use.

Site release information and corrective action plans are made available to the public at the local Department of Environmental Quality (DEQ), Remediation and Redevelopment Division (RRD) District Office listed below:

Lansing District Office –Constiution Hall, 525 W. Allegan Street, Lansing, Michigan 48909

To obtain a copy of this information, please go to www.michigan.gov/deq, Freedom of Information Act (FOIA) Link for further details, or contact the DEQ FOIA Office by phone at: 800-662-9278.

United States Welcome, PM Environmental | Logout | Changing Languages | Contact UPS | The UPS Store Search

My UPS Shipping Tracking Freight Locations Support UPS Solutions

Save up to 18% on UPS shipping for your business.
Sign up and start saving in your first week of shipping.
Sign Up Now

Tracking Number Track View Tracking History Other Tracking Options

Tracking Detail Like 1.5M Share Print Help A A A

**1Z7R45510398341216** Add Description

Updated: 02/11/2016 8:08 P.M. Eastern Time

Delivered

**Delivered On:**
Wednesday, 02/10/2016 at 1:57 P.M.

**Left At:**
Front Door

Proof of Delivery

**Notify me with Updates »**

**Report a Claim »**

**Need more information?**

Get Help

Shipping Information

**To:**
**604 W SILVER LAKE RD**
FENTON, MI, 48430, US

Shipment Progress What's This?

Service

UPS Ground

Additional Information

| | |
|---|---|
| **Reference Number(s):** | 01-4982-0-002<br>NOTICE |
| **Shipment Category:** | Package |
| **Shipped/Billed On:** | 02/09/2016 |
| **Weight:** | 1.00 lb |

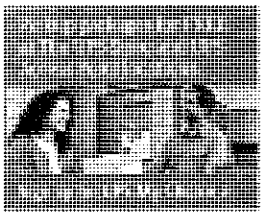

Back to Shipping History

Subscribe to UPS E-mail: Modify E-mail Preferences View Examples

**Contact UPS**
Browse Online Support
E-mail UPS
Live Chat
Call Customer Service

**Support**
Open a Shipping Account
Manage Accounts
Access Billing Options
Change Your Delivery

**Solutions for:**
Healthcare
Small Business
High Tech
More...

**Other UPS Sites:**
Select a website

**Follow us:**

UPS UNITED PROBLEM SOLVERS®

Home About UPS Site Guide Investors Careers Pressroom UPS Global UPS Mobile UPS Blog

Service Terms and Conditions Website Terms of Use Privacy Notice Your California Privacy Rights Protect Against Fraud

Copyright © 1994-2016 United Parcel Service of America, Inc. All rights reserved.

PM ENVIRONMENTAL
Risk Well Managed

Detroit
4080 W. 11 Mile Road
Berkley, MI 48072
f: 877.884.6775
t: 248.336.9988

Lansing
3340 Ranger Road
Lansing, MI 48906
f: 877.884.6775
t: 517.321.3331

Grand Rapids
560 5th Street, NW
Suite 301
Grand Rapids, MI 49503
f: 877.884.6775
t: 616.285.8857

February 9, 2016

Silvey's Properties and Dev. LLC
16083 Whitehead
Linden, Michigan 48451

**Re: Notice of Impacted Parties**
**From the Beacon & Bridge Market #8**
**Located at 110 East Broad Street, Linden, Michigan**
**PM Environmental, Inc. Project No. 01-4982-0-002**

Dear Property Owner:

This correspondence is intended to inform the current property owner of 106 South Bridge Street, Linden, Michigan that soil and groundwater contamination is believed to have migrated from the Beacon and Bridge Market #8 property located at 110 East Broad Street, Linden, Michigan to a portion of your property. The attachment is a completed "Notice to Impacted Parties" MDEQ form EQP 4003 (rev 1/2013) for the above referenced site. Submission of this correspondence should not be construed as an admission of any liability or a waiver of any defense or right. All rights and defenses afforded to Rare Family Partnership are reserved regarding liability or responsibility for conditions at the facility.

If you have any questions please contact us at (248) 336-9988.

Sincerely,
**PM ENVIRONMENTAL, INC.**

Christie L. Santiago
Senior Project Manager

Cc: Mr. Cliff Knaggs - Knaggs, Harter, Brake & Schneider, P.C.

MICHIGAN DEPARTMENT OF ENVIRONMENTAL QUALITY – REMEDIATION AND REDEVELOPMENT DIVISION
PO BOX 30426, LANSING, MI 48909-7926, Phone 517-284-5087, Fax 517-241-9581

# NOTICE TO IMPACTED PARTIES OF CORRECTIVE ACTION

*This information is being sent to notify you that your property is impacted by petroleum products or other regulated substances that were released from an Underground Storage Tank (UST) and to notify you of the steps that are being taken to address the contamination. This information is required to be sent to you under Sections 21309a(3) of Part 213, Leaking Underground Storage Tanks, of the Natural Resources and Environmental Protection Act, 1994 PA 451, as amended.*

| | | | |
|---|---|---|---|
| OWNER OR OPERATOR PROPOSING CORRECTIVE ACTION: Quick Sav Food Stores, Ltd. | | | |
| LOCATION OF RELEASE (SITE NAME): Beacon & Bridge Market #8 | | | |
| STREET ADDRESS: 110 East Broad Street | | | |
| CITY: Linden | ZIP: 48451 | COUNTY: Genesee | |
| CONTACT PERSON: Robert Carpentier | PHONE: 810.835.4341 | | |
| MAILING ADDRESS: 6285 Taylor Drive | CITY: Flint | STATE: MI | ZIP: 48507 |

| | | | |
|---|---|---|---|
| PROPERTY DIRECTLY IMPACTED BY THE RELEASE: 106 South Bridge Street | | | |
| PROPERTY OWNERS NAME: Silvey's Properties and Dev. LLC | | | |
| PROPERTY ADDRESS: 106 South Bridge Street | | | |
| CITY: Linden | ZIP: 48451 | COUNTY: Genesee | |
| MAILING ADDRESS: 16083 Whitehead | CITY: Linden | STATE: MI | ZIP: 48451 |

☒ The groundwater at this property is contaminated with petroleum products or other regulated substances.

☒ The soil at this property is contaminated with petroleum products or other regulated substances.

Type of corrective action(s) or restriction(s) proposed for this release:

Biophysical LNAPL Remediation Technology

Corrective Action Goal/Objective for your property:

☒ **Unrestricted Residential** (Petroleum products or other regulated substances would remain at levels that allow for the use of the property for any residential purpose, with no restrictions.)

☐ **Unrestricted Non-Residential** (Petroleum products or other regulated substances would remain at levels that allow for the use of the property for any non-residential purpose, with no restrictions.)

☐ **Restricted Residential** (Petroleum products or other regulated substances would remain at levels that require some restricted use of the property. The property can be used for residential purposes with the appropriate restrictions applied to the deed with the property owner's approval.)

☐ **Restricted Non-Residential** (Petroleum products or other regulated substances would remain at levels that require some restricted use of the property. The property can be used for non-residential purposes with the appropriate restrictions applied to the deed with the property owner's approval.)

This notice does not constitute a warranty or representation of any kind by the State of Michigan that the corrective actions performed in accordance with this notice will result in the achievement of the remedial criteria established by Law, or that the property is suitable for any particular use.

Site release information and corrective action plans are made available to the public at the local Department of Environmental Quality (DEQ), Remediation and Redevelopment Division (RRD) District Office listed below:

Lansing District Office –Constiution Hall, 525 W. Allegan Street, Lansing, Michigan 48909

To obtain a copy of this information, please go to www.michigan.gov/deq, Freedom of Information Act (FOIA) Link for further details, or contact the DEQ FOIA Office by phone at: 800-662-9278.

United States Welcome, PM Environmental | Logout | Changing Languages | Contact UPS | The UPS Store Search

My UPS Shipping Tracking Freight Locations Support UPS Solutions

Save up to 18% on UPS shipping for your business.
Sign up and start saving in your first week of shipping.
Sign Up Now

Tracking Number Track View Tracking History Other Tracking Options

Tracking Detail Like 1.5M Share Print Help A A A

**1Z7R45510396195807** Add Description

Updated: 02/11/2016 8:07 P.M. Eastern Time

Delivered

**Delivered On:**
Wednesday, 02/10/2016 at 1:19 P.M.

**Left At:**
Front Door

Proof of Delivery

**Notify me with Updates »**

**Report a Claim »**

**Need more information?**

Get Help

Shipping Information

**To:**
**16083 WHITEHEAD DR**
LINDEN, MI, 48451, US

Shipment Progress What's This?

Service

UPS Ground

Additional Information

| | |
|---|---|
| **Reference Number(s):** | 01-4982-0-002<br>NOTICE |
| **Shipment Category:** | Package |
| **Shipped/Billed On:** | 02/09/2016 |
| **Weight:** | 1.00 lb |

2 - Two Hour Delivery Windows Each Year
Unlimited Package Redirects
Upgrade to *UPS My Choice Premium*™ »
(Select the "Manage Membership" link to upgrade)

Back to Shipping History

Subscribe to UPS E-mail: Modify E-mail Preferences View Examples

**Contact UPS**
Browse Online Support
E-mail UPS
Live Chat
Call Customer Service

**Support**
Open a Shipping Account
Manage Accounts
Access Billing Options
Change Your Delivery

**Solutions for:**
Healthcare
Small Business
High Tech
More...

**Other UPS Sites:**
Select a website

**Follow us:**

UPS UNITED PROBLEM SOLVERS®

Home About UPS Site Guide Investors Careers Pressroom UPS Global UPS Mobile UPS Blog

Service Terms and Conditions Website Terms of Use Privacy Notice Your California Privacy Rights Protect Against Fraud

Copyright © 1994-2016 United Parcel Service of America, Inc. All rights reserved.

PM ENVIRONMENTAL
Risk Well Managed

Detroit
4080 W. 11 Mile Road
Berkley, MI 48072
f: 877.884.6775
t: 248.336.9988

Lansing
3340 Ranger Road
Lansing, MI 48906
f: 877.884.6775
t: 517.321.3331

Grand Rapids
560 5th Street, NW
Suite 301
Grand Rapids, MI 49503
f: 877.884.6775
t: 616.285.8857

February 9, 2016

Murray, Michael & Rebekah
13495 South Horrell Road
Fenton, Michigan 48430

**Re: Notice of Impacted Parties**
**From the Beacon & Bridge Market #8**
**Located at 110 East Broad Street, Linden, Michigan**
**PM Environmental, Inc. Project No. 01-4982-0-002**

Dear Property Owner:

This correspondence is intended to inform the current property owner of 110 South Bridge Street, Linden, Michigan that soil and groundwater contamination is believed to have migrated from the Beacon and Bridge Market #8 property located at 110 East Broad Street, Linden, Michigan to a portion of your property. The attachment is a completed "Notice to Impacted Parties" MDEQ form EQP 4003 (rev 1/2013) for the above referenced site. Submission of this correspondence should not be construed as an admission of any liability or a waiver of any defense or right. All rights and defenses afforded to Rare Family Partnership are reserved regarding liability or responsibility for conditions at the facility.

If you have any questions please contact us at (248) 336-9988.

Sincerely,
**PM ENVIRONMENTAL, INC.**

Christie L. Santiago
Senior Project Manager

Cc: Mr. Cliff Knaggs - Knaggs, Harter, Brake & Schneider, P.C.

MICHIGAN DEPARTMENT OF ENVIRONMENTAL QUALITY – REMEDIATION AND REDEVELOPMENT DIVISION
PO BOX 30426, LANSING, MI 48909-7926, Phone 517-284-5087, Fax 517-241-9581

# NOTICE TO IMPACTED PARTIES OF CORRECTIVE ACTION

*This information is being sent to notify you that your property is impacted by petroleum products or other regulated substances that were released from an Underground Storage Tank (UST) and to notify you of the steps that are being taken to address the contamination. This information is required to be sent to you under Sections 21309a(3) of Part 213, Leaking Underground Storage Tanks, of the Natural Resources and Environmental Protection Act, 1994 PA 451, as amended.*

| | | | |
|---|---|---|---|
| OWNER OR OPERATOR PROPOSING CORRECTIVE ACTION: Quick Sav Food Stores, Ltd. | | | |
| LOCATION OF RELEASE (SITE NAME): Beacon & Bridge Market #8 | | | |
| STREET ADDRESS: 110 East Broad Street | | | |
| CITY: Linden | ZIP: 48451 | COUNTY: Genesee | |
| CONTACT PERSON: Robert Carpentier | PHONE: 810.835.4341 | | |
| MAILING ADDRESS: 6285 Taylor Drive | CITY: Flint | STATE: MI | ZIP: 48507 |

| | | | |
|---|---|---|---|
| PROPERTY DIRECTLY IMPACTED BY THE RELEASE: 110 South Bridge Street | | | |
| PROPERTY OWNERS NAME: Michael & Rebekah Murray | | | |
| PROPERTY ADDRESS: 110 South Bridge Street | | | |
| CITY: Linden | ZIP: 48451 | COUNTY: Genesee | |
| MAILING ADDRESS: 13495 South Horrell Road | CITY: Fenton | STATE: MI | ZIP: 48430 |

☒ The groundwater at this property is contaminated with petroleum products or other regulated substances.

☒ The soil at this property is contaminated with petroleum products or other regulated substances.

Type of corrective action(s) or restriction(s) proposed for this release:

Biophysical LNAPL Remediation Technology

Corrective Action Goal/Objective for your property:

☒ **Unrestricted Residential** (Petroleum products or other regulated substances would remain at levels that allow for the use of the property for any residential purpose, with no restrictions.)

☐ **Unrestricted Non-Residential** (Petroleum products or other regulated substances would remain at levels that allow for the use of the property for any non-residential purpose, with no restrictions.)

☐ **Restricted Residential** (Petroleum products or other regulated substances would remain at levels that require some restricted use of the property. The property can be used for residential purposes with the appropriate restrictions applied to the deed with the property owner's approval.)

☐ **Restricted Non-Residential** (Petroleum products or other regulated substances would remain at levels that require some restricted use of the property. The property can be used for non-residential purposes with the appropriate restrictions applied to the deed with the property owner's approval.)

This notice does not constitute a warranty or representation of any kind by the State of Michigan that the corrective actions performed in accordance with this notice will result in the achievement of the remedial criteria established by Law, or that the property is suitable for any particular use.

Site release information and corrective action plans are made available to the public at the local Department of Environmental Quality (DEQ), Remediation and Redevelopment Division (RRD) District Office listed below:

Lansing District Office –Constiution Hall, 525 W. Allegan Street, Lansing, Michigan 48909

To obtain a copy of this information, please go to www.michigan.gov/deq, Freedom of Information Act (FOIA) Link for further details, or contact the DEQ FOIA Office by phone at: 800-662-9278.

United States Welcome, PM Environmental | Logout | Changing Languages | Contact UPS | The UPS Store Search

My UPS Shipping **Tracking** Freight Locations Support UPS Solutions

Save up to 18% on UPS shipping for your business.
Sign up and start saving in your first week of shipping.
Sign Up Now

Tracking Number Track View Tracking History Other Tracking Options

Tracking Detail Like 1.5M Share Print Help A A A

**1Z7R45510397694945** Add Description

Updated: 02/11/2016 7:58 P.M. Eastern Time

Delivered

**Delivered On:**
Wednesday, 02/10/2016 at 11:42 A.M.

**Left At:**
Porch

Proof of Delivery

**Notify me with Updates »**

**Report a Claim »**

Shipment Progress What's This?

Additional Information

| | |
|---|---|
| **Reference Number(s):** | 01-4982-0-002<br>NOTICE |
| **Shipment Category:** | Package |
| **Shipped/Billed On:** | 02/09/2016 |
| **Weight:** | 1.00 lb |

**Need more information?**

Get Help

Shipping Information

**To:**
**13495 S HORRELL RD**
FENTON, MI, 48430, US

Service

UPS Ground

2 - Two Hour Delivery Windows Each Year
Unlimited Package Redirects
Upgrade to *UPS My Choice Premium*™ »
(Select the 'Manage Membership' link to upgrade)

Back to Shipping History

Subscribe to UPS E-mail: Modify E-mail Preferences View Examples

**Contact UPS**
Browse Online Support
E-mail UPS
Live Chat
Call Customer Service

**Support**
Open a Shipping Account
Manage Accounts
Access Billing Options
Change Your Delivery

**Solutions for:**
Healthcare
Small Business
High Tech
More...

**Other UPS Sites:**
Select a website

**Follow us:**

UPS UNITED PROBLEM SOLVERS®

Home About UPS Site Guide Investors Careers Pressroom UPS Global UPS Mobile UPS Blog

Service Terms and Conditions Website Terms of Use Privacy Notice Your California Privacy Rights Protect Against Fraud

Copyright © 1994-2016 United Parcel Service of America, Inc. All rights reserved.

PM ENVIRONMENTAL
Risk Well Managed

Detroit
4080 W. 11 Mile Road
Berkley, MI 48072
f: 877.884.6775
t: 248.336.9988

Lansing
3340 Ranger Road
Lansing, MI 48906
f: 877.884.6775
t: 517.321.3331

Grand Rapids
560 5th Street, NW
Suite 301
Grand Rapids, MI 49503
f: 877.884.6775
t: 616.285.8857

February 9, 2016

Mr. Scott Chrivia, CSM
Charter Communications
Safety Manager
7372 Davison Road
Davison, MI 48423

**Re: Notice of Impacted Parties**
**From the Beacon & Bridge Market #8**
**Located at 110 East Broad Street, Linden, Michigan**
**PM Environmental, Inc. Project No. 01-4982-0-002**

Dear Mr. Chrivia

This correspondence is intended to inform the utility owner in the vicinity of Broad and Bridge Street in Linden, Michigan that soil and groundwater contamination is believed to have migrated from the Beacon and Bridge Market #8 property located at 110 East Broad Street, Linden, Michigan to a portion of the utility corridor. The attachment is a completed "Notice to Impacted Parties" MDEQ form EQP 4003 (rev 1/2013) for the above referenced site. Submission of this correspondence should not be construed as an admission of any liability or a waiver of any defense or right. All rights and defenses afforded to Rare Family Partnership are reserved regarding liability or responsibility for conditions at the facility.

If you have any questions please contact us at (248) 336-9988.

Sincerely,
**PM ENVIRONMENTAL, INC.**

Christie L. Santiago
Senior Project Manager

Cc: Mr. Cliff Knaggs - Knaggs, Harter, Brake & Schneider, P.C.

MICHIGAN DEPARTMENT OF ENVIRONMENTAL QUALITY – REMEDIATION AND REDEVELOPMENT DIVISION
PO BOX 30426, LANSING, MI 48909-7926, Phone 517-284-5087, Fax 517-241-9581

# NOTICE TO IMPACTED PARTIES OF CORRECTIVE ACTION

*This information is being sent to notify you that your property is impacted by petroleum products or other regulated substances that were released from an Underground Storage Tank (UST) and to notify you of the steps that are being taken to address the contamination. This information is required to be sent to you under Sections 21309a(3) of Part 213, Leaking Underground Storage Tanks, of the Natural Resources and Environmental Protection Act, 1994 PA 451, as amended.*

| | | | |
|---|---|---|---|
| OWNER OR OPERATOR PROPOSING CORRECTIVE ACTION: Quick Sav Food Stores, Ltd. | | | |
| LOCATION OF RELEASE (SITE NAME): Beacon & Bridge Market #8 | | | |
| STREET ADDRESS: 110 East Broad Street | | | |
| CITY: Linden | ZIP: 48451 | COUNTY: Genesee | |
| CONTACT PERSON: Robert Carpentier | PHONE: 810.835.4341 | | |
| MAILING ADDRESS: 6285 Taylor Drive | CITY: Flint | STATE: MI | ZIP: 48507 |

| | | | |
|---|---|---|---|
| PROPERTY DIRECTLY IMPACTED BY THE RELEASE: East Broad Street and South Bridge Street | | | |
| PROPERTY OWNERS NAME: Charter Communications Utility | | | |
| PROPERTY ADDRESS: Area west and north of 110 East Broad Street | | | |
| CITY: Linden | ZIP: 48451 | COUNTY: Genesee | |
| MAILING ADDRESS: 7372 Davison Road | CITY: Davison | STATE: MI | ZIP: 49423 |

☒ The groundwater at this property is contaminated with petroleum products or other regulated substances.

☒ The soil at this property is contaminated with petroleum products or other regulated substances.

Type of corrective action(s) or restriction(s) proposed for this release:

Biophysical LNAPL Remediation Technology

Corrective Action Goal/Objective for your property:

☒ **Unrestricted Residential** (Petroleum products or other regulated substances would remain at levels that allow for the use of the property for any residential purpose, with no restrictions.)

☐ **Unrestricted Non-Residential** (Petroleum products or other regulated substances would remain at levels that allow for the use of the property for any non-residential purpose, with no restrictions.)

☐ **Restricted Residential** (Petroleum products or other regulated substances would remain at levels that require some restricted use of the property. The property can be used for residential purposes with the appropriate restrictions applied to the deed with the property owner's approval.)

☐ **Restricted Non-Residential** (Petroleum products or other regulated substances would remain at levels that require some restricted use of the property. The property can be used for non-residential purposes with the appropriate restrictions applied to the deed with the property owner's approval.)

This notice does not constitute a warranty or representation of any kind by the State of Michigan that the corrective actions performed in accordance with this notice will result in the achievement of the remedial criteria established by Law, or that the property is suitable for any particular use.

Site release information and corrective action plans are made available to the public at the local Department of Environmental Quality (DEQ), Remediation and Redevelopment Division (RRD) District Office listed below:

Lansing District Office –Constiution Hall, 525 W. Allegan Street, Lansing, Michigan 48909

To obtain a copy of this information, please go to www.michigan.gov/deq, Freedom of Information Act (FOIA) Link for further details, or contact the DEQ FOIA Office by phone at: 800-662-9278.

United States Welcome, PM Environmental | Logout | Changing Languages | Contact UPS | The UPS Store Search

My UPS Shipping Tracking Freight Locations Support UPS Solutions

Save up to 18% on UPS shipping for your business.
Sign up and start saving in your first week of shipping.
Sign Up Now

Tracking Number Track View Tracking History Other Tracking Options

Tracking Detail Like 1.5M Share Print Help A A A

**1Z7R45510399789992** Add Description

Updated: 02/11/2016 8:06 P.M. Eastern Time

Delivered

**Delivered On:**
Wednesday, 02/10/2016 at 10:40 A.M.

**Left At:**
Receiver

**Signed By:**
PALMER

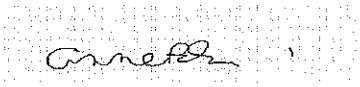

Proof of Delivery

Notify me with Updates »

Report a Claim »

**Need more information?**

Get Help

Shipping Information

**To:**
**7372 DAVISON RD**
DAVISON, MI, 48423, US

Service

**UPS Ground**

Shipment Progress What's This?

Additional Information

| | |
|---|---|
| **Reference Number(s):** | 01-4982-0-002<br>NOTICE |
| **Shipment Category:** | Package |
| **Shipped/Billed On:** | 02/09/2016 |
| **Weight:** | 1.00 lb |

2 - Two Hour Delivery Windows Each Year
Unlimited Package Redirects
Upgrade to UPS My Choice Premium℠ »
(Select the "Manage Membership" link to upgrade)

Back to Shipping History



Copyright © 1994-2016 United Parcel Service of America, Inc. All rights reserved.

PM ENVIRONMENTAL
Risk Well Managed

Detroit
4080 W. 11 Mile Road
Berkley, MI 48072
f: 877.884.6775
t: 248.336.9988

Lansing
3340 Ranger Road
Lansing, MI 48906
f: 877.884.6775
t: 517.321.3331

Grand Rapids
560 5th Street, NW
Suite 301
Grand Rapids, MI 49503
f: 877.884.6775
t: 616.285.8857

February 9, 2016

Mr. Paul Zelnak
City of Linden
132 East Broad Street
Linden, Michigan 48451

**Re: Notice of Impacted Parties**
**From the Beacon & Bridge Market #8**
**Located at 110 East Broad Street, Linden, Michigan**
**PM Environmental, Inc. Project No. 01-4982-0-002**

Dear Mr. Zelnak:

This correspondence is intended to inform the utility owner/easement holders/highway authorities in the vicinity of Broad and Bridge Street in Linden, Michigan that soil and groundwater contamination is believed to have migrated from the Beacon and Bridge Market #8 property located at 110 East Broad Street, Linden, Michigan. The attachment is a completed "Notice to Impacted Parties" MDEQ form EQP 4003 (rev 1/2013) for the above referenced site. Submission of this correspondence should not be construed as an admission of any liability or a waiver of any defense or right. All rights and defenses afforded to Rare Family Partnership are reserved regarding liability or responsibility for conditions at the facility.

If you have any questions please contact us at (248) 336-9988.

Sincerely,
**PM ENVIRONMENTAL, INC.**

Christie L. Santiago
Senior Project Manager

Cc: Mr. Cliff Knaggs - Knaggs, Harter, Brake & Schneider, P.C.

MICHIGAN DEPARTMENT OF ENVIRONMENTAL QUALITY – REMEDIATION AND REDEVELOPMENT DIVISION
PO BOX 30426, LANSING, MI 48909-7926, Phone 517-284-5087, Fax 517-241-9581

# NOTICE TO IMPACTED PARTIES OF CORRECTIVE ACTION

*This information is being sent to notify you that your property is impacted by petroleum products or other regulated substances that were released from an Underground Storage Tank (UST) and to notify you of the steps that are being taken to address the contamination. This information is required to be sent to you under Sections 21309a(3) of Part 213, Leaking Underground Storage Tanks, of the Natural Resources and Environmental Protection Act, 1994 PA 451, as amended.*

| | | | |
|---|---|---|---|
| OWNER OR OPERATOR PROPOSING CORRECTIVE ACTION: Quick Sav Food Stores, Ltd. | | | |
| LOCATION OF RELEASE (SITE NAME): Beacon & Bridge Market #8 | | | |
| STREET ADDRESS: 110 East Broad Street | | | |
| CITY: Linden | ZIP: 48451 | COUNTY: Genesee | |
| CONTACT PERSON: Robert Carpentier | PHONE: 810.835.4341 | | |
| MAILING ADDRESS: 6285 Taylor Drive | CITY: Flint | STATE: MI | ZIP: 48507 |

| | | | |
|---|---|---|---|
| PROPERTY DIRECTLY IMPACTED BY THE RELEASE: East Broad Street and South Bridge Street | | | |
| PROPERTY OWNERS NAME: City of Linden | | | |
| PROPERTY ADDRESS: Area west and north of 110 East Broad Street | | | |
| CITY: Linden | ZIP: 48451 | COUNTY: Genesee | |
| MAILING ADDRESS: 132 East Broad Street | CITY: Linden | STATE: MI | ZIP: 48451 |

☒ The groundwater at this property is contaminated with petroleum products or other regulated substances.

☒ The soil at this property is contaminated with petroleum products or other regulated substances.

Type of corrective action(s) or restriction(s) proposed for this release:

Biophysical LNAPL Remediation Technology

Corrective Action Goal/Objective for your property:

☒ **Unrestricted Residential** (Petroleum products or other regulated substances would remain at levels that allow for the use of the property for any residential purpose, with no restrictions.)

☐ **Unrestricted Non-Residential** (Petroleum products or other regulated substances would remain at levels that allow for the use of the property for any non-residential purpose, with no restrictions.)

☐ **Restricted Residential** (Petroleum products or other regulated substances would remain at levels that require some restricted use of the property. The property can be used for residential purposes with the appropriate restrictions applied to the deed with the property owner's approval.)

☐ **Restricted Non-Residential** (Petroleum products or other regulated substances would remain at levels that require some restricted use of the property. The property can be used for non-residential purposes with the appropriate restrictions applied to the deed with the property owner's approval.)

This notice does not constitute a warranty or representation of any kind by the State of Michigan that the corrective actions performed in accordance with this notice will result in the achievement of the remedial criteria established by Law, or that the property is suitable for any particular use.

Site release information and corrective action plans are made available to the public at the local Department of Environmental Quality (DEQ), Remediation and Redevelopment Division (RRD) District Office listed below:

Lansing District Office –Constiution Hall, 525 W. Allegan Street, Lansing, Michigan 48909

To obtain a copy of this information, please go to www.michigan.gov/deq, Freedom of Information Act (FOIA) Link for further details, or contact the DEQ FOIA Office by phone at: 800-662-9278.

Save up to 18% on UPS shipping for your business.
Sign up and start saving in your first week of shipping.
Sign Up Now

Tracking Number Track View Tracking History Other Tracking Options

Tracking Detail Like 1.5M Share Print Help A A A

**1Z7R45510396347787** Add Description

Updated: 02/11/2016 8:05 P.M. Eastern Time

Delivered

**Delivered On:**
Wednesday, 02/10/2016 at 11:12 A.M.

**Left At:**
Receiver

**Signed By:**
VONDRA

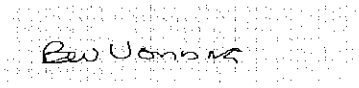

Proof of Delivery

Notify me with Updates »

Report a Claim »

Need more information?

Get Help

Shipping Information

**To:**
**132 E BROAD ST**
LINDEN, MI, 48451, US

Service

UPS Ground

Shipment Progress What's This?

Additional Information

| | |
|---|---|
| **Reference Number(s):** | 01-4982-0-002<br>NOTICE |
| **Shipment Category:** | Package |
| **Shipped/Billed On:** | 02/09/2016 |
| **Weight:** | 1.00 lb |

Back to Shipping History



Copyright © 1994-2016 United Parcel Service of America, Inc. All rights reserved.

PM ENVIRONMENTAL
Risk Well Managed

Detroit
4080 W. 11 Mile Road
Berkley, MI 48072
f: 877.884.6775
t: 248.336.9988

Lansing
3340 Ranger Road
Lansing, MI 48906
f: 877.884.6775
t: 517.321.3331

Grand Rapids
560 5th Street, NW
Suite 301
Grand Rapids, MI 49503
f: 877.884.6775
t: 616.285.8857

February 9, 2016

Douglas Weber, Esq.
Principal Engineer-RE/Regulatory
Verizon Wireless
24242 Northwestern Hwy
Southfield, MI 48075

**Re: Notice of Impacted Parties**
**From the Beacon & Bridge Market #8**
**Located at 110 East Broad Street, Linden, Michigan**
**PM Environmental, Inc. Project No. 01-4982-0-002**

Dear Mr. Weber:

This correspondence is intended to inform the utility owner in the vicinity of Broad and Bridge Street in Linden, Michigan that soil and groundwater contamination is believed to have migrated from the Beacon and Bridge Market #8 property located at 110 East Broad Street, Linden, Michigan to a portion of the utility corridor. The attachment is a completed "Notice to Impacted Parties" MDEQ form EQP 4003 (rev 1/2013) for the above referenced site. Submission of this correspondence should not be construed as an admission of any liability or a waiver of any defense or right. All rights and defenses afforded to Rare Family Partnership are reserved regarding liability or responsibility for conditions at the facility.

If you have any questions please contact us at (248) 336-9988.

Sincerely,
**PM ENVIRONMENTAL, INC.**

Christie L. Santiago
Senior Project Manager

Cc: Mr. Cliff Knaggs - Knaggs, Harter, Brake & Schneider, P.C.

MICHIGAN DEPARTMENT OF ENVIRONMENTAL QUALITY – REMEDIATION AND REDEVELOPMENT DIVISION
PO BOX 30426, LANSING, MI 48909-7926, Phone 517-284-5087, Fax 517-241-9581

# NOTICE TO IMPACTED PARTIES OF CORRECTIVE ACTION

*This information is being sent to notify you that your property is impacted by petroleum products or other regulated substances that were released from an Underground Storage Tank (UST) and to notify you of the steps that are being taken to address the contamination. This information is required to be sent to you under Sections 21309a(3) of Part 213, Leaking Underground Storage Tanks, of the Natural Resources and Environmental Protection Act, 1994 PA 451, as amended.*

| | | | |
|---|---|---|---|
| OWNER OR OPERATOR PROPOSING CORRECTIVE ACTION: Quick Sav Food Stores, Ltd. | | | |
| LOCATION OF RELEASE (SITE NAME): Beacon & Bridge Market #8 | | | |
| STREET ADDRESS: 110 East Broad Street | | | |
| CITY: Linden | ZIP: 48451 | COUNTY: Genesee | |
| CONTACT PERSON: Robert Carpentier | PHONE: 810.835.4341 | | |
| MAILING ADDRESS: 6285 Taylor Drive | CITY: Flint | STATE: MI | ZIP: 48507 |

| | | | |
|---|---|---|---|
| PROPERTY DIRECTLY IMPACTED BY THE RELEASE: East Broad Street and South Bridge Street | | | |
| PROPERTY OWNERS NAME: Verizon Utility | | | |
| PROPERTY ADDRESS: Area west and north of 110 East Broad Street | | | |
| CITY: Linden | ZIP: 48451 | COUNTY: Genesee | |
| MAILING ADDRESS: 7372 Davison Road | CITY: Davison | STATE: MI | ZIP: 49423 |

☒ The groundwater at this property is contaminated with petroleum products or other regulated substances.

☒ The soil at this property is contaminated with petroleum products or other regulated substances.

Type of corrective action(s) or restriction(s) proposed for this release:

Biophysical LNAPL Remediation Technology

Corrective Action Goal/Objective for your property:

☒ **Unrestricted Residential** (Petroleum products or other regulated substances would remain at levels that allow for the use of the property for any residential purpose, with no restrictions.)

☐ **Unrestricted Non-Residential** (Petroleum products or other regulated substances would remain at levels that allow for the use of the property for any non-residential purpose, with no restrictions.)

☐ **Restricted Residential** (Petroleum products or other regulated substances would remain at levels that require some restricted use of the property. The property can be used for residential purposes with the appropriate restrictions applied to the deed with the property owner's approval.)

☐ **Restricted Non-Residential** (Petroleum products or other regulated substances would remain at levels that require some restricted use of the property. The property can be used for non-residential purposes with the appropriate restrictions applied to the deed with the property owner's approval.)

This notice does not constitute a warranty or representation of any kind by the State of Michigan that the corrective actions performed in accordance with this notice will result in the achievement of the remedial criteria established by Law, or that the property is suitable for any particular use.

Site release information and corrective action plans are made available to the public at the local Department of Environmental Quality (DEQ), Remediation and Redevelopment Division (RRD) District Office listed below:

Lansing District Office –Constiution Hall, 525 W. Allegan Street, Lansing, Michigan 48909

To obtain a copy of this information, please go to www.michigan.gov/deq, Freedom of Information Act (FOIA) Link for further details, or contact the DEQ FOIA Office by phone at: 800-662-9278.

United States Welcome, PM Environmental | Logout | Changing Languages | Contact UPS | The UPS Store Search

My UPS Shipping Tracking Freight Locations Support UPS Solutions

Save up to 18% on UPS shipping for your business.
Sign up and start saving in your first week of shipping.
Sign Up Now

Tracking Number Track View Tracking History Other Tracking Options

Tracking Detail Like 1.5M Share Print Help A A A

**1Z7R45510398842756** Add Description

Updated: 02/11/2016 8:01 P.M. Eastern Time

Delivered

**Delivered On:**
Wednesday, 02/10/2016 at 10:38 A.M.

**Left At:**
Inside Delivery

**Signed By:**
WILSON

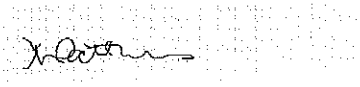

Proof of Delivery

**Notify me with Updates »**

**Report a Claim »**

**Need more information?**

Get Help

Shipping Information

**To:**
**24242 NORTHWESTERN HWY**
SOUTHFIELD, MI, 48075, US

Service

UPS Ground

Shipment Progress What's This?

Additional Information

| | |
|---|---|
| **Reference Number(s):** | 01-4982-0-002<br>NOTICE |
| **Shipment Category:** | Package |
| **Shipped/Billed On:** | 02/09/2016 |
| **Weight:** | 1.00 lb |

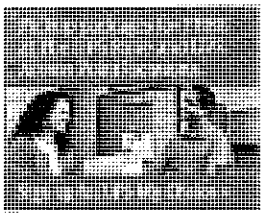

Back to Shipping History

Subscribe to UPS E-mail: Modify E-mail Preferences View Examples

**Contact UPS**
Browse Online Support
E-mail UPS
Live Chat
Call Customer Service

**Support**
Open a Shipping Account
Manage Accounts
Access Billing Options
Change Your Delivery

**Solutions for:**
Healthcare
Small Business
High Tech
More...

**Other UPS Sites:**
Select a website

**Follow us:**

UPS UNITED PROBLEM SOLVERS®

Home About UPS Site Guide Investors Careers Pressroom UPS Global UPS Mobile UPS Blog

Service Terms and Conditions Website Terms of Use Privacy Notice Your California Privacy Rights Protect Against Fraud

Copyright © 1994-2016 United Parcel Service of America, Inc. All rights reserved.

PM ENVIRONMENTAL
Risk Well Managed

Detroit
4080 W. 11 Mile Road
Berkley, MI 48072
f: 877.884.6775
t: 248.336.9988

Lansing
3340 Ranger Road
Lansing, MI 48906
f: 877.884.6775
t: 517.321.3331

Grand Rapids
560 5th Street, NW
Suite 301
Grand Rapids, MI 49503
f: 877.884.6775
t: 616.285.8857

February 9, 2016

Brian Trent
Consumers Energy
1945 West Parnall Road
Jackson, Michigan 49201

**Re: Notice of Impacted Parties**
**From the Beacon & Bridge Market #8**
**Located at 110 East Broad Street, Linden, Michigan**
**PM Environmental, Inc. Project No. 01-4982-0-002**

Dear Mr. Trent:

This correspondence is intended to inform the utility owner in the vicinity of Broad and Bridge Street in Linden, Michigan that soil and groundwater contamination is believed to have migrated from the Beacon and Bridge Market #8 property located at 110 East Broad Street, Linden, Michigan to a portion of the utility corridor. The attachment is a completed "Notice to Impacted Parties" MDEQ form EQP 4003 (rev 1/2013) for the above referenced site. Submission of this correspondence should not be construed as an admission of any liability or a waiver of any defense or right. All rights and defenses afforded to Rare Family Partnership are reserved regarding liability or responsibility for conditions at the facility.

If you have any questions please contact us at (248) 336-9988.

Sincerely,
**PM ENVIRONMENTAL, INC.**

Christie L. Santiago
Senior Project Manager

Cc: Mr. Cliff Knaggs - Knaggs, Harter, Brake & Schneider, P.C.

MICHIGAN DEPARTMENT OF ENVIRONMENTAL QUALITY – REMEDIATION AND REDEVELOPMENT DIVISION
PO BOX 30426, LANSING, MI 48909-7926, Phone 517-284-5087, Fax 517-241-9581

# NOTICE TO IMPACTED PARTIES OF CORRECTIVE ACTION

*This information is being sent to notify you that your property is impacted by petroleum products or other regulated substances that were released from an Underground Storage Tank (UST) and to notify you of the steps that are being taken to address the contamination. This information is required to be sent to you under Sections 21309a(3) of Part 213, Leaking Underground Storage Tanks, of the Natural Resources and Environmental Protection Act, 1994 PA 451, as amended.*

| | | | |
|---|---|---|---|
| OWNER OR OPERATOR PROPOSING CORRECTIVE ACTION: Quick Sav Food Stores, Ltd. | | | |
| LOCATION OF RELEASE (SITE NAME): Beacon & Bridge Market #8 | | | |
| STREET ADDRESS: 110 East Broad Street | | | |
| CITY: Linden | ZIP: 48451 | COUNTY: Genesee | |
| CONTACT PERSON: Robert Carpentier | PHONE: 810.835.4341 | | |
| MAILING ADDRESS: 6285 Taylor Drive | CITY: Flint | STATE: MI | ZIP: 48507 |

| | | | |
|---|---|---|---|
| PROPERTY DIRECTLY IMPACTED BY THE RELEASE: East Broad Street and South Bridge Street | | | |
| PROPERTY OWNERS NAME: Consumers Energy Utility | | | |
| PROPERTY ADDRESS: Area west and north of 110 East Broad Street | | | |
| CITY: Linden | ZIP: 48451 | COUNTY: Genesee | |
| MAILING ADDRESS: 1945 W Parnall Road | CITY: Jackson | STATE: MI | ZIP: 49201 |

☒ The groundwater at this property is contaminated with petroleum products or other regulated substances.

☒ The soil at this property is contaminated with petroleum products or other regulated substances.

Type of corrective action(s) or restriction(s) proposed for this release:

Biophysical LNAPL Remediation Technology

Corrective Action Goal/Objective for your property:

☒ **Unrestricted Residential** (Petroleum products or other regulated substances would remain at levels that allow for the use of the property for any residential purpose, with no restrictions.)

☐ **Unrestricted Non-Residential** (Petroleum products or other regulated substances would remain at levels that allow for the use of the property for any non-residential purpose, with no restrictions.)

☐ **Restricted Residential** (Petroleum products or other regulated substances would remain at levels that require some restricted use of the property. The property can be used for residential purposes with the appropriate restrictions applied to the deed with the property owner's approval.)

☐ **Restricted Non-Residential** (Petroleum products or other regulated substances would remain at levels that require some restricted use of the property. The property can be used for non-residential purposes with the appropriate restrictions applied to the deed with the property owner's approval.)

This notice does not constitute a warranty or representation of any kind by the State of Michigan that the corrective actions performed in accordance with this notice will result in the achievement of the remedial criteria established by Law, or that the property is suitable for any particular use.

Site release information and corrective action plans are made available to the public at the local Department of Environmental Quality (DEQ), Remediation and Redevelopment Division (RRD) District Office listed below:

Lansing District Office –Constiution Hall, 525 W. Allegan Street, Lansing, Michigan 48909

To obtain a copy of this information, please go to www.michigan.gov/deq, Freedom of Information Act (FOIA) Link for further details, or contact the DEQ FOIA Office by phone at: 800-662-9278.

Save up to 18% on UPS shipping for your business.
Sign up and start saving in your first week of shipping.
Sign Up Now

Tracking Number Track View Tracking History Other Tracking Options

Tracking Detail Like 1.5M Share Print Help A A A

**1Z7R45510398653175** Add Description

Updated: 02/11/2016 8:04 P.M. Eastern Time

Delivered

**Delivered On:**
Wednesday, 02/10/2016 at 10:00 A.M.

**Left At:**
Dock

**Signed By:**
CODI

Proof of Delivery

Notify me with Updates »

Report a Claim »

Need more information?

Get Help

Shipping Information

**To:**
**1945 W PARNALL RD**
JACKSON, MI, 49201, US

Service

UPS Ground

Shipment Progress What's This?

Additional Information

| | |
|---|---|
| **Reference Number(s):** | 01-4982-0-002<br>NOTICE |
| **Shipment Category:** | Package |
| **Shipped/Billed On:** | 02/09/2016 |
| **Weight:** | 1.00 lb |

2 - Two Hour Delivery Windows Each Year
Unlimited Package Redirects
Upgrade to UPS MyChoice Premium™ »
(Select the "Manage Membership" link to upgrade)

Back to Shipping History



Copyright © 1994-2016 United Parcel Service of America, Inc. All rights reserved.

PM ENVIRONMENTAL
Risk Well Managed

Detroit
4080 W. 11 Mile Road
Berkley, MI 48072
f: 877.884.6775
t: 248.336.9988

Lansing
3340 Ranger Road
Lansing, MI 48906
f: 877.884.6775
t: 517.321.3331

Grand Rapids
560 5th Street, NW
Suite 301
Grand Rapids, MI 49503
f: 877.884.6775
t: 616.285.8857

February 9, 2016

Genesee County Road Commission
211 West Oakley Street
Flint, Michigan 48503-3995

**Re: Notice of Impacted Parties**
**From the Beacon & Bridge Market #8**
**Located at 110 East Broad Street, Linden, Michigan**
**PM Environmental, Inc. Project No. 01-4982-0-002**

To Whom it May Concern:

This correspondence is intended to inform the utility owner/easement holders/highway authorities in the vicinity of Broad and Bridge Street in Linden, Michigan that soil and groundwater contamination is believed to have migrated from the Beacon and Bridge Market #8 property located at 110 East Broad Street, Linden, Michigan. The attachment is a completed "Notice to Impacted Parties" MDEQ form EQP 4003 (rev 1/2013) for the above referenced site. Submission of this correspondence should not be construed as an admission of any liability or a waiver of any defense or right. All rights and defenses afforded to Rare Family Partnership are reserved regarding liability or responsibility for conditions at the facility.

If you have any questions please contact us at (248) 336-9988.

Sincerely,
**PM ENVIRONMENTAL, INC.**

Christie L. Santiago
Senior Project Manager

Cc: Mr. Cliff Knaggs - Knaggs, Harter, Brake & Schneider, P.C.

MICHIGAN DEPARTMENT OF ENVIRONMENTAL QUALITY – REMEDIATION AND REDEVELOPMENT DIVISION
PO BOX 30426, LANSING, MI 48909-7926, Phone 517-284-5087, Fax 517-241-9581

# NOTICE TO IMPACTED PARTIES OF CORRECTIVE ACTION

*This information is being sent to notify you that your property is impacted by petroleum products or other regulated substances that were released from an Underground Storage Tank (UST) and to notify you of the steps that are being taken to address the contamination. This information is required to be sent to you under Sections 21309a(3) of Part 213, Leaking Underground Storage Tanks, of the Natural Resources and Environmental Protection Act, 1994 PA 451, as amended.*

| | | | |
|---|---|---|---|
| OWNER OR OPERATOR PROPOSING CORRECTIVE ACTION: Quick Sav Food Stores, Ltd. | | | |
| LOCATION OF RELEASE (SITE NAME): Beacon & Bridge Market #8 | | | |
| STREET ADDRESS: 110 East Broad Street | | | |
| CITY: Linden | ZIP: 48451 | COUNTY: Genesee | |
| CONTACT PERSON: Robert Carpentier | PHONE: 810.835.4341 | | |
| MAILING ADDRESS: 6285 Taylor Drive | CITY: Flint | STATE: MI | ZIP: 48507 |

| | | | |
|---|---|---|---|
| PROPERTY DIRECTLY IMPACTED BY THE RELEASE: East Broad Street and South Bridge Street | | | |
| PROPERTY OWNERS NAME: Genesee County Road Commision | | | |
| PROPERTY ADDRESS: Area west and north of 110 East Broad Street | | | |
| CITY: Linden | ZIP: 48451 | COUNTY: Genesee | |
| MAILING ADDRESS: 211 West Oakley STreet | CITY: Flint | STATE: MI | ZIP: 48503 |

☒ The groundwater at this property is contaminated with petroleum products or other regulated substances.

☒ The soil at this property is contaminated with petroleum products or other regulated substances.

Type of corrective action(s) or restriction(s) proposed for this release:

Biophysical LNAPL Remediation Technology

Corrective Action Goal/Objective for your property:

☒ **Unrestricted Residential** (Petroleum products or other regulated substances would remain at levels that allow for the use of the property for any residential purpose, with no restrictions.)

☐ **Unrestricted Non-Residential** (Petroleum products or other regulated substances would remain at levels that allow for the use of the property for any non-residential purpose, with no restrictions.)

☐ **Restricted Residential** (Petroleum products or other regulated substances would remain at levels that require some restricted use of the property. The property can be used for residential purposes with the appropriate restrictions applied to the deed with the property owner's approval.)

☐ **Restricted Non-Residential** (Petroleum products or other regulated substances would remain at levels that require some restricted use of the property. The property can be used for non-residential purposes with the appropriate restrictions applied to the deed with the property owner's approval.)

This notice does not constitute a warranty or representation of any kind by the State of Michigan that the corrective actions performed in accordance with this notice will result in the achievement of the remedial criteria established by Law, or that the property is suitable for any particular use.

Site release information and corrective action plans are made available to the public at the local Department of Environmental Quality (DEQ), Remediation and Redevelopment Division (RRD) District Office listed below:

Lansing District Office –Constiution Hall, 525 W. Allegan Street, Lansing, Michigan 48909

To obtain a copy of this information, please go to www.michigan.gov/deq, Freedom of Information Act (FOIA) Link for further details, or contact the DEQ FOIA Office by phone at: 800-662-9278.

United States Welcome, PM Environmental | Logout | Changing Languages | Contact UPS | The UPS Store Search

My UPS Shipping Tracking Freight Locations Support UPS Solutions

Save up to 18% on UPS shipping for your business.
Sign up and start saving in your first week of shipping.
Sign Up Now

Tracking Number Track View Tracking History Other Tracking Options

Tracking Detail Like 1.5M Share Print Help A A A

**1Z7R45510396450165** Add Description

Updated: 02/11/2016 8:03 P.M. Eastern Time

Delivered

**Delivered On:**
Wednesday, 02/10/2016 at 11:57 A.M.

**Left At:**
Office

**Signed By:**
K LOVE

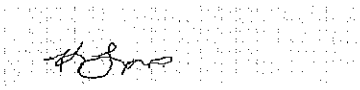

Proof of Delivery

Notify me with Updates »

Report a Claim »

Need more information?

Get Help

Shipping Information

**To:**
**211 W OAKLEY ST**
FLINT, MI, 48503, US

Service

UPS Ground

Shipment Progress What's This?

Additional Information

| | |
|---|---|
| **Reference Number(s):** | 01-4982-0-002<br>NOTICE |
| **Shipment Category:** | Package |
| **Shipped/Billed On:** | 02/09/2016 |
| **Weight:** | 1.00 lb |

2 - Two Hour Delivery Windows Each Year
Unlimited Package Redirects
Upgrade to UPS My Choice Premium℠ »
(Select the "Manage Membership" link to upgrade)

Back to Shipping History

Subscribe to UPS E-mail: Modify E-mail Preferences View Examples

**Contact UPS**
Browse Online Support
E-mail UPS
Live Chat
Call Customer Service

**Support**
Open a Shipping Account
Manage Accounts
Access Billing Options
Change Your Delivery

**Solutions for:**
Healthcare
Small Business
High Tech
More...

**Other UPS Sites:**
Select a website

Follow us:

UPS UNITED PROBLEM SOLVERS®

Home About UPS Site Guide Investors Careers Pressroom UPS Global UPS Mobile UPS Blog

Service Terms and Conditions Website Terms of Use Privacy Notice Your California Privacy Rights Protect Against Fraud

Copyright © 1994-2016 United Parcel Service of America, Inc. All rights reserved.

# Appendix E

PM ENVIRONMENTAL | Environmental & Engineering Services

# City of Linden

132 East Broad Street • Linden, Michigan • 48451 - 0507
(810) 735-7980 • Fax (810) 735 - 4793

## FACSIMILE TRANSMITTAL SHEET

TO: A. Hess

FROM: Scott Sutter

COMPANY: Atwell

DATE: 10-18-12

FAX NUMBER:

TOTAL NO. OF PAGES INCLUDING COVER:

PHONE NUMBER:

SENDER'S REFERENCE NUMBER:

RE:

YOUR REFERENCE NUMBER:

☐ URGENT ☐ FOR REVIEW ☐ PLEASE COMMENT ☐ PLEASE REPLY ☐ AS REQUESTED

NOTES/COMMENTS:

Union Block Property, report from Strata Environmental on the property for 122 Bridge St.

If you have any questions call me at 810-577-1834.

STRATA ENVIRONMENTAL SERVICES, INC.

RECEIVED
AUG 09 2006

August 7, 2006

Mr. James R. Letts
Director of Public Works
City of Linden
P.O. Box 507
Linden, Michigan 48451

Re: Storm Sewer Investigation

Dear Mr. Letts:

This letter has been prepared as a summary of findings associated with "gasoline" vapors detected in the City storm sewer system and in the basement of the building located at 122 Bridge Street.

On July 12, 2006, a representative from Strata Environmental Services, Inc. (Strata) was on site and met with you to evaluate the reported detection of "gasoline" vapors. You further indicated that vapors had been detected on previous occasions, and that the presence of these vapors seemed to correlate with significant rain events. You indicated that vapors were detected in the storm sewer near the old fire station (208 Bridge Street) and at the Shiawassee River (located along the side of the old fire station) where the effluent discharge from the storm sewer system is located. During the site inspection, Strata noted that a sorbent boom was placed in the river around the discharge point and that the boom had a strong "gasoline-type" odor. You indicated that a sample of storm water was collected from the manhole access in front of the old fire station and submitted for laboratory analyses, and the analyses showed the presence of gasoline constituents. Strata personnel inspected the storm sewer at the manhole access in front of the old fire station and did not detect any gasoline type odors.

Strata further evaluated the general area where "gasoline-type" vapors were detected to determine area topography relative to the storm sewer system and discharge point at the river. The general topography slopes downward toward the river. Strata also assessed the surrounding property use in an attempt to identify a potential source(s) of the "gasoline-type" vapors.

585 Jewett Road • Mason, Michigan 48854 • Phone (517) 676-6900 • Fax (517) 676-8834

Following the general evaluation of the site, Strata inspected the basement of 122 Bridge Street where occupants reported the detection of "gasoline" odors. Upon entering the basement, Strata noticed the strong smell of "gasoline." Upon further inspection, free phase "gasoline" was observed in the basement sump and in an open floor drain. Based on this detection, a fan was placed in the basement window to move air out of the basement and help reduce the accumulation of vapors prior to removing the liquids the following day. In addition, the sump pump, which was plumbed to the sanitary sewer system, was unplugged.

On July 13, 2006, Bill Barr, Inc. and Strata personnel were on site to pump out the drain and sump, as well as to further evaluate the presence of the free phase "gasoline" and its relationship to the "gasoline-type" vapors and gasoline constituents detected in a storm water sample.

Upon entering the basement of 122 Bridge Street, Strata measured the concentration of volatile organic compounds (VOCs) in the ambient air using a photoionization detector (PID). Ambient concentrations in the breathing zone averaged 12 parts per million (ppm) VOCs throughout most of the basement. Near the sump, and below the breathing zone, concentrations spiked as high as 467 ppm VOCs. Strata also monitored the ambient air upstairs in the area used as office space and did not detect any measurable concentrations of VOCs.

Strata personnel measured 4 3/4 inches of free product in the floor drain, and 5/8 inches on top of approximately16 ½ inches of water in the sump. A vacuum truck was used to suck the free product and residual fluids from the drain and sump. Less than ten total gallons of liquid were recovered for off-site disposal by Barr.

Following removal of the liquids, Strata inspected the sump. The base of the sump was native soil. Water was observed flowing back into the sump from its base suggesting that the water in the sump is an expression of a shallow water table surface or perched water zone. There were two inlets to the sump, one several inches below the basement floor, and one near the top of the sump, just beneath the concrete. Strata and City personnel conducted a dye test on the floor drain/sump system to evaluate whether they we connected to the City's storm water system. Green dye was added to the sump and water was continuously introduced for approximately 30 minutes. During this time, green dye was observed in the floor drain, a nearby hole in the concrete floor, and in a small hole or drain in another part of the basement, thereby indicating that the sump is tied to some form of drainage system beneath the concrete. Another observation was that, during the whole time water was being added to the sump, the sump never overflowed, even after plugging off the inlet/outlet at the top of

the sump. After approximately 30 minutes of introducing water to the sump, green dye was observed in the storm sewer at the manhole access in front of the old fire station.

Based on the dye testing, the floor drain and/or footing tiles associated with 122 Bridge Street are connected to the City's storm sewer system. It is our opinion that the free phase "gasoline" observed at 122 Bridge Street is the source of "gasoline" vapors and gasoline constituents detected in the City storm sewer system. Given the presence of free phase "gasoline" in the floor drain and sump, the source of the "gasoline" is most likely located proximal to the building. It is further Strata's opinion that, because of shallow depth to ground water in the area, significant rain events would likely trigger the occurrence of vapors and free phase hydrocarbons in the presence of a localized source.

To further evaluate potential sources, Strata conducted a historic environmental file review using a computerized search mechanism. Strata searched environmental database records and historical sources through Environmental Data Resources, Inc. (EDR). Copies of the EDR report are attached.

A review of the environmental database records identified five sites with registered underground storage tanks (USTs) and two leaking underground storage tank (LUST) sites within standard search requirements. None of the UST sites appear to be readily apparent sources. Two of the sites are the Marathon station and Quick-Sav on Broad Street, and the other sites are located north of the river. The two LUST sites do not appear to be potential sources in that the EDR lists the status of the two sites as being closed.

As part of the historic property use evaluation, Strata obtained historic topographic maps, aerial photographs, Sanborn Fire Insurance maps and a city directory abstract. Review of the topographic maps, fire insurance maps and aerial photographs provided no insight as to a potential source of the free phase "gasoline". However, the attached city directory abstract shows that Standard Oil Co. is listed at 122 Bridge Street in 1966. In 1961, Oginsky Sales & Service (gas station) is listed at 127 Bridge Street. McSorley's garage is listed at 123 Bridge Street in 1971, and Linden Auto Sales is listed at 127 Bridge Street in 1981. These listings suggest business activities that could potentially be considered sources. Of the listings, it is our opinion that Standard Oil Co., being listed at 122 Bridge Street where free phase "gasoline" was found, raises immediate suspicion.

Following liquid removal, dye testing and further site evaluation, additional measures were taken to reduce the potential for vapors to accumulate in the

basement. Sections of sewer mats were placed over the sump and any drains or holes in the floor where green dye was observed. In addition, City personnel installed a sewer ventilation unit in the basement that is currently running. Ambient air concentrations had been reduced to 1 ppm total VOCs after removing the free phase "gasoline" and installing the ventilator,

It is Strata's recommendation that the sewer mats be left in place and ventilation of the basement continues until the source of the "gasoline" can be identified and the situation mitigated.

Should you have any questions, or if we can be of further assistance, please do not hesitate to contact our office at (517) 676-6900.

Sincerely,

**STRATA ENVIRONMENTAL SERVICES, INC.**

Michael C. Serafini, CPG
Principal

Encl.

R.B.
6061442L.001

# Appendix F

PM ENVIRONMENTAL | Environmental & Engineering Services

# NutriBind™

***Combining the Power of the Patented RemBind™ Technology (US Patent 8,940,958) with the Proven Performance of Nutrisulfate® (U.S. Patent No. 7,138,060)***

*NutriBind*™ is the latest technology innovation from Tersus Environmental in association with Ziltek Pty Ltd. Designed to address the challenges in soil and groundwater remediation, *NutriBind*™ is a powdered reagent that once applied delivers rapid contaminant concentration reduction (days) combined with accelerated bioremediation. When mixed with water, the resulting buffered slurry contains elevated sulfate along with a wide array of beneficial vitamins, minerals, and metabolites designed to increase efficiency of electron donor (hydrocarbon contaminants) utilization.

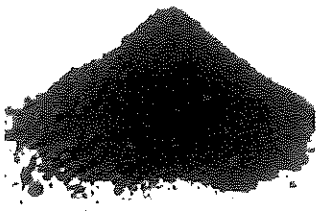

*NutriBind*™ has a dual function. It immediately binds and immobilizes contaminants in soil and groundwater, quickly removing them from the mobile phase. The high surface area provides a matrix favorable for microbial colonization and growth. Treatment of the sorbed contaminants is further accomplished through sulfate enhanced bioremediation.

**Significance of Sulfate**

Sulfate reduction is the predominant electron accepting process for the degradation of hydrocarbons

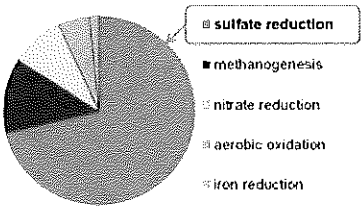


Sulfate reduction and methanogenesis is the dominate natural degradation processes at most sites; and therefore, adding oxygen to the anaerobic portion of the plume may be disadvantageous.

*NutriBind*™ stimulates biodegradation by providing a soluble, readily available electron acceptor solution. In the presence of elevated sulfate, anaerobic groundwater bacteria uses BTEX, MTBE and other petroleum hydrocarbons for carbon and energy while mineralizing the hydrocarbons to carbon dioxide and water. Sulfate addition enhances natural conditions and reduces the carbon footprint when compared to conventional remediation.

The high sulfate metabolic supplements in *NutriBind*™ enhance the kinetics and efficiency of microbial systems specifically related to bioremediation of BTEX, MTBE, TBA and other petroleum hydrocarbons. The increase in kinetics and efficiency decreases the remediation time and reduces the amount of substrate / amendment required.

**Sulfate Enhanced Bioremediation (SEB)**

Petroleum Hydrocarbon + *NutriBind*™ + Dissolved Iron → Iron Sulfide + $H_2O$ + $MgCO_3$ + $CO_2$

The result is metabolic by-products, energy, and new microorganisms (Wiedemeier, 1999).

| Chemical Composition | Percentage (%) |
|---|---|
| Carbon, activated | up to 77 |
| Kaolin | 1 to 23 |
| Aluminium hydroxide, amorphous | 1 to 16 |
| Magnesium Sulfate | 17 to 19 |
| Yeast Fermentation Product (*Nutrimax®-Granular*) | 3 to 5 |
| Proprietary Additives | < 8 |

**Properties**

- Physical state: Solid
- Form: Powder / Granular
- Color: Black
- Odor: Odorless, fermentation aroma

**Packaging Options**

- 100 lb. Fiber Drums

**Benefits**

- *NutriBind*™ treats both water and soil
- Immediate solution with a predictable end result
- Rapidly reduces dissolved-phase plumes in days/weeks
- Stops plume migration and protects sensitive receptors
- Addresses matrix back diffusion
- Cost effective treatment alternative